AGENDA

REGULAR MEETING OF THE CITY COUNCIL OF THE CITY OF COTTONWOOD, ARIZONA, TO BE HELD SEPTEMBER 6, 2016, AT 6:00 PM., AT THE COUNCIL CHAMBERS BUILDING, 826 NORTH MAIN STREET, COTTONWOOD, ARIZONA.

I. CALL TO ORDER

II. ROLL CALL

III. PLEDGE OF ALLEGIANCE

IV. BRIEF SUMMARY OF CURRENT EVENTS BY MAYOR, CITY COUNCIL AND/OR CITY MANAGER -- THE PUBLIC BODY DOES NOT PROPOSE, DISCUSS, DELIBERATE OR TAKE LEGAL ACTION ON ANY MATTER BROUGHT UP DURING THIS SUMMARY UNLESS THE SPECIFIC MATTER IS PROPERLY NOTICED FOR LEGAL ACTION.

V. PROCLAMATIONS

PROCLAIMING THE MONTH OF SEPTEMBER AS GRANDFAMILY/KINSHIP CARE MONTH.

PROCLAIMING AUGUST 21-27, 2016, AS NATIONAL EMPLOYER SUPPORT OF THE GUARD AND RESERVE WEEK.

DECLARING SEPTEMBER 24, 2016, AS "VERDE RIVER DAY."

VI. PRESENTATIONS

PRESENTATION OF A PLAQUE OF APPRECIATION TO RETIRING REPORTER, JON HUTCHINSON.

UPDATE FROM THE BOARD MEMBERS REGARDING THE VERDE VALLEY TEEN CENTER.

VII. CALL TO THE PUBLIC--This portion of the agenda is set aside for the public to address the Council regarding an item that is not listed on the agenda for discussion. However, the Council cannot engage in discussion regarding any item that is not officially listed on the agenda for discussion and/or action (A.R.S. §38-431.02(H).) Comments are limited to a 5 minute time period.

VIII. APPROVAL OF MINUTES

REGULAR MEETING OF JULY 19, 2016.

Comments regarding items listed on the agenda are limited to a 5 minute time period per speaker.

IX. CONSENT AGENDA--The following items are considered to be routine and non-controversial by the Council and will be approved by one motion. There will be no separate discussion of these items unless a Council Member or a citizen so requests, in which case the item will be removed from the Consent Agenda and considered in its normal sequence on the Agenda.

1. COOPERATIVE PURCHASING AGREEMENT WITH THE CITY OF GOODYEAR & HD WATERWORKS GROUP, FOR THE PURCHASE OF WATER METERS AND RELATED EQUIPMENT.
2. RENEWAL OF INTERGOVERNMENTAL AGREEMENT WITH MINGUS UNION HIGH SCHOOL DISTRICT FOR USE OF THE CITY'S OUTDOOR POOL FOR THE 2016 COMPETITIVE SWIM SEASON.
3. PURCHASE OF FIVE FLEET VEHICLES THROUGH THE STATE OF ARIZONA CONTRACT #ADSP012-016667, THROUGH THE STATE OF ARIZONA COOPERATIVE PURCHASING GROUP.
4. AGREEMENT WITH THE STATE OF ARIZONA DEPARTMENT OF EMERGENCY AND MILITARY AFFAIRS, DIVISION OF EMERGENCY MANAGEMENT, FOR FISCAL YEAR 2016 HAZARD MITIGATION FUNDS FOR IMPROVEMENTS TO RAILROAD WASH IN THE VICINITY OF THE COTTONWOOD VILLAGE ASSISTED LIVING FACILITY LOCATED ON MINGUS AVENUE.
5. RESOLUTION NUMBER 2851--APPROVING AN INTERGOVERNMENTAL AGREEMENT WITH THE YAVAPAI COUNTY FLOOD CONTROL DISTRICT, FOR FINANCIAL CONTRIBUTION TO THE CITY FOR FUNDING TO COMPLETE THE CITY-WIDE DRAINAGE STUDY AND MASTER PLAN.
6. RESOLUTION NUMBER 2853, APPROVING THE ABANDONMENT OF A PORTION OF CITY RIGHT-OF-WAY; AND ACCEPTANCE OF A RELATED PUBLIC UTILITY EASEMENT.
7. AGREEMENT WITH THE U.S. GEOLOGICAL SURVEY FOR JOINT FUNDING FOR THE COSTS OF HYDROLOGIC DATA COLLECTION IN THE MIDDLE VERDE RIVER WATERSHED FOR FEDERAL FISCAL YEAR 2016.
8. APPLICATION FOR EXTENSION OF PREMISES/PATIO PERMIT SUBMITTED BY BRIAN WEBB, LICENSEE FOR THE STATE BAR LOCATED AT 1048 NORTH MAIN STREET, FOR THE THUNDER VALLEY RALLY EVENT SCHEDULED FOR SEPTEMBER 16 & 17, 2016.

X. NEW BUSINESS—The following items are for Council discussion, consideration, and possible legal action.

1. RESOLUTION NUMBERS 2843, 2844, 2845, AND 2846--APPOINTING MEMBERS TO THE LIBRARY ADVISORY BOARD.
2. APPROVAL OF A GUARANTEED MAXIMUM PRICE PROPOSAL AND DESIGN/BUILD AGREEMENT WITH SCHOFIELD CIVIL CONSTRUCTION FOR THE INSTALLATION OF A UV DISINFECTION SYSTEM FOR THE WASTEWATER TREATMENT PLANT LOCATED ON MINGUS AVENUE.
3. RATIFICATION OF CANCELLATION OF IFB 2016-PW-10; ACCEPTANCE OF APPARENT LOW BID IN IFB 2017-PW-01 FROM CST STORAGE, INC., AND APPROVAL OF CONTRACT FOR THE FABRICATION AND INSTALLATION OF A BOLTED STEEL RECLAIMED WATER STORAGE TANK FOR THE RIVERFRONT

WATER RECLAMATION FACILITY FOR THE CONTRACT PRICE OF $219,575.00.

4. APPROVAL OF A PROFESSIONAL SERVICES AGREEMENT WITH SHEPHARD WESNITZER, INC., TO PROVIDE CONSTRUCTION INSPECTION SERVICES FOR THE RIVERFRONT WATER RECLAMATION FACILITY PROJECT.

5. PROPOSED REIMBURSEMENT/COOPERATION AGREEMENT BETWEEN THE CITY, LAMAIN 919, LLC, (JOHN C. HAUPT), AND JEROME PROPERTIES, LLC, (ERIC & MICHELLE JURISIN) UNDER WHICH THE CITY WOULD DESIGN, PROCURE A CONTRACTOR, AND ADMINISTER A CONTRACT FOR THE CONSTRUCTION OF IMPROVEMENTS TO THE ALLEYWAY BETWEEN MAIN AND CACTUS STREET FROM PINAL STREET TO THE SOUTH PROPERTY LINE OF PARCEL NUMBER 406-22-013 ON MAIN STREET, TO PROVIDE ACCESS TO TWO PROPOSED NEW/EXPANDED BUSINESSES, LA MAIN AND THE TAVERN HOTEL, WITH THE BUSINESSES PAYING THE COSTS OF CONSTRUCTING THE IMPROVEMENTS.

6. RESOLUTION NUMBER 2852--APPROVING A GRANT AGREEMENT WITH THE UNITED STATES OF AMERICA, ACTING THROUGH THE FEDERAL AVIATION ADMINISTRATION (FAA) FOR THE RECONSTRUCTION OF A PORTION OF THE AIRPORT APRON AT THE COTTONWOOD AIRPORT.

7. APPROVAL OF THE SCOPE OF WORK WITH C&S COMPANIES FOR THE CONSTRUCTION ADMINISTRATION OF THE AIRPORT APRON RECONSTRUCTION PROJECT.

8. CONSENT OF ASSIGNMENT OF LEASE FOR COTTONWOOD AIRPARK LOT 131, FROM CLYDE & LOIS HENDERSON TO B AND B REVOCABLE TRUST.

9. AWARD OF BID AND APPROVAL OF CONTRACT WITH KINNEY CONSTRUCTION SERVICES, INC., FOR THE RIVERFRONT PARK RESTROOM FACILITIES REMODEL PROJECT AND THE CONSTRUCTION OF NEW RESTROOMS AT GARRISON PARK AND THE KIDS' PARK.

10. RESOLUTION NUMBER 2850-APPROVING AN INTERGOVERNMENTAL AGREEMENT BETWEEN CITIES AND COUNTIES OF THE STATE OF ARIZONA, FOR RECIPROCAL PROVISION OF LIMITED LEGAL SERVICES

XI. CLAIMS AND ADJUSTMENTS

XII. ADJOURNMENT

Pursuant to A.R.S. 38-431.03.(A) the Council may vote to go into executive session on any agenda item pursuant to A.R.S. 38-431.03.(A)(3) Discussion or consultation for legal advice with the attorney or attorneys of the public body.

The Cottonwood Council Chambers is accessible to the disabled in accordance with Federal "504" and "ADA" laws. Those with needs for special typeface print or hearing devices may request these from the City Clerk (TDD 634-5526.) All requests must be made 24 hours prior to the meeting.

Members of the City Council will attend either in person or by telephone conference call.

Notice is hereby given that pursuant to A.R.S. 1-602.A.9 , subject to certain specified statutory exceptions, parents have a right to consent before the State or any of its political subdivisions make a video or audio recording of a minor child. Meetings of the City Council are audio and/or video recorded, and, as a result, proceedings in which children are present may be subject to such recording. Parents in order to exercise their rights may either file written consent with the City Clerk to such recording, or take personal action to ensure that their child or children are not present when a recording may be made. If a child is present at the time a recording is made, the City will assume that the rights afforded parents pursuant to A.R.S. 1-602.A.9 have been waived.

P R O C L A M A T I O N

Whereas, approximately 2.9 million children in America are being raised by their grandparents or other relatives in kinship care, including 73,000 children in Arizona; and

Whereas, kinship caregivers not only ensure better outcomes for the children in their care by keeping them out of the foster care system, but they also save the government hundreds of millions of dollars each year; and

Whereas since relationships with family members are crucial for the healthy development of children, the State of Arizona should strive to promote and preserve kinship, sibling and other familial connection for Arizona's children; and

Whereas, during the month of September, Grandfamily/Kinship Care Month is observed across the United States; and

Whereas, the State of Arizona is proud to recognize grandparents and other relatives who raise children in kinship care to ensure their safety and promote their well-being.

Now therefore, I Diane Joens, Mayor of the City of Cottonwood do hereby proclaim the month of September as

Grandfamily/Kinship Care Month

and honor grandparents and other relatives who raise children in kinship care.

IN WITNESS WHEREOF, I have hereunto set my hand and caused to be affixed the seal of the City of Cottonwood, Arizona, this 6th day of September 2016.

_____

Diane Joens, Mayor

P r o c l a m a t i o n

Whereas, National Guard and Reserve forces comprise nearly half of our nation's military strength, and are essential to America's national security. Reserve Component forces stand ready to answer the call to serve, whether serving alongside active duty counterparts all across the globe or responding to humanitarian crises at home and abroad; and

Whereas, employers provide critical support to members of the National Guard and Reserve; allowing Citizen Warriors to serve whenever the Nation calls, often foregoing financial gain and making sacrifices in the process; and

Whereas, employer support is stronger than ever, more than 42 years after President Richard Nixon authorized the Secretary of Defense to establish the National Committee for Employer Support of the Guard and Reserve (ESGR;) and

Whereas, our nation is in debt to the Citizen Warriors departing the comforts of home to ensure our freedoms remain intact. Likewise, America pays special tribute to the commitment of dedicated and supportive employers who continue to make service in the Reserve Components possible; and

NOW, THEREFORE, I, Diane Joens, Mayor of the City of Cottonwood, Arizona, do hereby proclaim August 21-27, 2016, as

National Employer Support of the Guard and Reserve Week

IN WITNESS THEREOF, I have hereunto set my hand this 6th day of September 2016.

_____

Diane Joens, Mayor

P R O C L A M A T I O N

WHEREAS, the Verde River is a riparian resource that winds its way through the heart of Cottonwood and the Verde Valley; and

WHEREAS, the citizens of Cottonwood cherish our natural environment; and

WHEREAS, Cottonwood's most precious natural resource, the Verde River corridor, reflects our community, who we are, and why we live here; and

WHEREAS, the Verde River corridor is a welcome and essential bed and breakfast for Neotropical birds on the arduous migration path between northern and southern Americas; and

WHEREAS, more than 340 bird species have been recorded flying, trilling and resting along the green riparian pathway and some of the highest breeding bird densities of any North American habitat exist in the Verde River riparian area; and

WHEREAS, the Verde River is a unique and important environmental and economic resource. It contains a significant amount of the riparian habitat left in Arizona where 85 percent of all wildlife in the area looks for sustenance and is critical to the survival of numerous native aquatic and terrestrial species; and

WHEREAS, the Verde River is a significant water supply and recreational corridor; and

WHEREAS, we risk losing this treasure if we don't strategize together to preserve it for future generations; and

WHEREAS, Arizonans must continue our work to successfully find accommodation for all the roles that rivers play, and

WHEREAS, Verde River Day was organized in 1988 to promote awareness of the Verde River's distinctive riparian habitat; and

NOW, THEREFORE BE IT RESOLVED that I, Diane Joens, Mayor of the City of Cottonwood, Arizona, do hereby proclaim September 24, 2016, as

Verde River Day in the City of Cottonwood

_____

Diane Joens, Mayor

City of Cottonwood, Arizona
City Council Agenda Communication

Print

Meeting Date:	September 6, 2016
Subject:	Plaque for Jon Hutchinson for his retirement
Department:	City Clerk
From:	Doug Bartosh, City Manager

REQUESTED ACTION

Presentation of plaque to Jon Hutchinson in appreciation of his service to the City of Cottonwood.

SUGGESTED MOTION

If the Council desires to approve this item the suggested motion is: Not applicable

BACKGROUND

Jon is retiring from the Verde Independent.

JUSTIFICATION/BENEFITS/ISSUES

Not applicable

COST/FUNDING SOURCE

Not applicable

ATTACHMENTS:

Name:	Description:	Type:
No Attachments Available		

MINUTES OF THE REGULAR MEETING OF THE CITY COUNCIL OF THE CITY OF COTTONWOOD, ARIZONA, HELD JULY 19, 2016, AT 6:00 P.M., AT THE CITY COUNCIL CHAMBERS BUILDING, 826 NORTH MAIN STREET, COTTONWOOD, ARIZONA.

Mayor Joens called the meeting to order at 6:00 p.m. Roll call was taken as follows:

COUNCIL MEMBERS PRESENT

Diane Joens, Mayor
Karen Pfeifer, Vice Mayor
Terence Pratt, Council Member
Kyla Allen, Council Member
Linda Norman, Council Member
Ruben Jauregui, Council Member

STAFF MEMBERS PRESENT

Doug Bartosh, City Manager
Matt McLean, Deputy Clerk
Steve Horton, City Attorney
Rudy Rodriguez, Administrative Services General Manager
Morgan Scott, Development Services Manager
Hezekiah Allen, Community Services

PLEDGE OF ALLEGIANCE

Mayor Joens led the pledge of allegiance.

SUMMARY OF CURRENT EVENTS

Mr. Bartosh announced our Youth Commission has done their end of the year trip; and there is an opening on the Planning and Zoning Commission.

Mayor Joens announced she and Council Member Pratt met with Kris Mays, who is representing the Solar Industry, at the Red Rooster.

PRESENTATIONS

PRESENTATION OF A CHECK IN THE AMOUNT OF $200 TO THE AMERICAN LEGION RIDERS, POST 25, FOR THEIR ANNUAL PICNIC AND BAR-B-QUE FOR VETERANS TO BE HELD AT THE PRESCOTT VA HOSPITAL AND VA DOMICILIARY.

The council presented a check to Bill Gay and Don McDowell, from the American Legion Riders, with a check for their annual picnic and Bar-B-Que for Veterans to be held at the Prescott VA Hospital.

CALL TO THE PUBLIC

There were no comments from the public.

APPROVAL OF MINUTES OF REGULAR MEETING OF JULY 5, 2016

Council Member Pratt moved to approve the minutes. The motion was seconded by Council Member Allen, and carried unanimously.

CONSENT AGENDA

DONATION OF POTABLE WATER TANKS TO THE NAVAJO NATION

REMOTE TASTING ROOM LIQUOR LICENSE APPLICATION SUBMITTED BY MAYNARD KEENAN FOR CADUCEUS CELLARS, LLC, TO BE LOCATED AT 1001 NORTH MAIN STREET (MERKIN VINEYARDS OSTERIA.)

RESOLUTION NUMBER 2849--APPROVING A MODIFICATION TO THE INTERGOVERNMENTAL AGREEMENT WITH THE ARIZONA DEPARTMENT OF REVENUE, FOR THE ADMINISTRATION, COLLECTION, AUDIT AND LICENSING OF TRANSACTION PRIVILEGE AND USE TAXES IMPOSED BY THE CITY

COMMUNITY AGENCY FUNDING AGREEMENT WITH THE OLD TOWN CENTER FOR THE ARTS.

FUNDING AGREEMENT WITH THE VERDE VALLEY SENIOR CITIZENS' ASSOCIATION.

COMMUNITY AGENCY FUNDING AGREEMENT WITH THE OLD TOWN ASSOCIATION.

APPLICATION FOR EXTENSION OF PREMISES LIQUOR LICENSE PERMIT SUBMITTED BY TAMARA MORKEN FOR THAT BREWING COMPANY, LOCATED AT 300 EAST CHERRY STREET, FOR AN EVENT SCHEDULED FOR AUGUST 27, 2016.

RECOMMEND APPROVAL OF A SPECIAL EVENT LIQUOR LICENSE APPLICATION TO BE SUBMITTED BY JAMES ANDERSON, APPLICANT FOR THE OLD TOWN ASSOCIATION, FOR THE THUNDER VALLEY RALLY EVENT TO BE HELD SEPTEMBER 16 & 17, 2016, IN OLD TOWN COTTONWOOD.

APPLICATION FOR TEMPORARY EXTENSION OF PREMISES/PATIO PERMIT SUBMITTED BY DONALD RIFFEL, LICENSEE FOR MAIN STAGE LOCATED AT 1 S. MAIN STREET FOR AN EVENT SCHEDULED FOR SEPTEMBER 16 & 17, 2016.

Council Member Allen moved to approve the Consent Agenda. The motion was seconded by Council Member Norman, and carried unanimously.

Mayor Joens requested the Deputy Clerk read Resolution Number 2849 by title only.

RESOLUTION NUMBER 2849

A RESOLUTION OF THE MAYOR AND CITY COUNCIL OF THE CITY OF COTTONWOOD, ARIZONA, APPROVING A MODIFICATION TO THE INTERGOVERNMENTAL AGREEMENT WITH THE ARIZONA DEPARTMENT OF REVENUE, FOR THE ADMINISTRATION, COLLECTION, AUDIT AND LICENSING OF TRANSACTION PRIVILEGE AND USE TAXES IMPOSED BY THE CITY.

NEW BUSINESS

RESOLUTION NUMBER 2848--APPROVING THE FORM AND AUTHORIZING THE EXECUTION AND DELIVERY OF A SECOND PURCHASE AGREEMENT, A SECOND TRUST AGREEMENT, AN ESCROW TRUST AGREEMENT, A CONTINUING DISCLOSURE UNDERTAKING, AN OBLIGATION PURCHASE CONTRACT AND OTHER NECESSARY AGREEMENTS, INSTRUMENTS AND DOCUMENTS; APPROVING THE SALE AND EXECUTION AND DELIVERY OF NOT TO EXCEED $13,075,000 AGGREGATE PRINCIPAL AMOUNT OF PLEDGED REVENUE REFUNDING OBLIGATIONS EVIDENCING A PROPORTIONATE INTEREST OF THE OWNERS THEREOF IN THE PURCHASE AGREEMENT; DELEGATING AUTHORITY TO THE MAYOR, MANAGER AND FINANCE DIRECTOR OF THE CITY TO DETERMINE CERTAIN MATTERS AND TERMS WITH RESPECT TO THE FOREGOING; AUTHORIZING THE TAKING OF ALL OTHER ACTIONS NECESSARY TO THE CONSUMMATION OF THE TRANSACTIONS CONTEMPLATED BY THIS RESOLUTION AND DECLARING AN EMERGENCY

Mr. Rodriguez stated we are looking to refinance the Greater Arizona Development Authority (GADA) loan with a pledge revenue refunding obligation series 2016. The GADA loan was the financing mechanism for the recreation center, the expansion of the library, the expansion of the pool, the acquisition of property from Yavapai County to expand the parking area for the recreation center, and we were also able to improve the Mickelsen Parkway. With the refinance we are looking to save approximately $1.4 to $1.5 million. The transaction costs are $100,000. We are not extending the loan itself and are keeping the exact same term. We are looking to do the refunding now rather than next year when they are actually callable so we can take advantage of the low interest market.

Grant Hammill, managing director for Stifel Nicolaus, stated this is an opportunity that we have been tracking with the city manager and the finance director for quite some time. Now interest rates have dropped to the point where it has become feasible for the city to consider moving forward with this in the low interest rate environment we are in. Unlike the previous refinancing that we have worked on together, the debt service for the GADA loan is paid out of the general fund. Any debt savings from a potential debt refinancing would benefit the general fund. He then reviewed the interest rates for the last 12 months from the US Treasury Note Rate and the 10 year high grade municipal bond yield, which shows a dramatic decline in interest rates. The treasury rate has come down a full 80 basis points over that period of time. Rates have come down due to the slowing economic growth in the US economy, negative interest rates that exist in other countries, and investors are moving their money into the safety and security of US Treasury securities. Right now there is

$13,075,000 of bonds outstanding with an interest rate of 4.6 percent. The annual debt service the city is paying right now is a little over $1.5 million. The total debt service would be $17 million in 2027. They are proposing a new series of bonds at an interest rate of 2.17 percent. The estimated savings as represented is approximately $146,000 per year, for a total of about $1.5 to $1.6 million. What they propose to investors is the city will provide the same revenue pledge as it did last year when it sold excise tax revenue bonds. It would be a full excise tax pledge, and that way we can get the highest credit rating on the bonds and the lowest interest rates. The city would be pledging the city sales tax and the state shared revenues. After this sale the city would have two excise tax secured obligations in the market. Once these bonds are issued, the 2007 GADA bonds will effectively go away and be replaced by the lower interest rate bonds. The schedule is that they would work with the city staff to complete this bond sale within the next four to six weeks, and then they would retire the 2007 obligations

Council Member Pratt stated this will save the city about $1.3 million, so this seems like a no brainer.

Mr. Hammill stated most entities with outstanding debt in Arizona have taken steps to refinance their debt.

Mayor Joens stated the recreation center is always being used by the public. When we built the recreation center it was going to be an economic development driver that was discussed in the market studies. We have never done a study regarding the recreation center being an economic draw.

Mr. Bartosh stated we can certainly ask that, and it might be valuable to look at from the health savings benefit to the community as well.

Mr. Faust stated the realtors in the area had stated buyers were interested in it, and they were buying in the area because of the recreation center.

Rose Sperry, from Verde Village, spoke against Resolution Number 2848. She stated the estimated $250,000 debt repayment for this loan will be paid by the one percent utility bill payers, and wonder if this is just kicking the debt down the road.

Sherry Twamley, from Verde Village, spoke against refinancing this loan that we are paying for because the city doesn't pay its debts. The rec center has been losing $1.7 million a year. The use of the emergency clause and never telling the public until you put it on the website minutes before the meeting is not acceptable.

Mr. Rodriguez stated the term of the bond is not being extended. The utility tax has always been an issue with people. The utility tax is general fund revenue not charged specifically to the water company, it is charged to all the utility companies, and it only amounts to about $240,000. The maintenance and operation of the recreation center is about $2.3 million, and $1.5 million is the debt service. We are trying to reduce it to $1.3-$1.4 million. The

$700,000 remaining is a short fall that we discussed years ago in 2007, and we agreed to support it with sales tax. We will be saving over $100,000 a year by refinancing.

Council Member Pratt moved to approve Resolution Number 2848 authorizing the sale and execution and delivery of not to exceed $13,075,000 aggregate principal amount of pledged revenue refunding obligations evidencing a proportionate interest of the owners thereof in a purchase agreement; approving the form and authorizing the execution and delivery of such purchase agreement and other necessary related agreements, instruments and documents; delegating authority to determine certain matters and terms with respect to the foregoing; authorizing the taking of all other actions necessary to the consummation of the transactions contemplated by the resolution and declaring an emergency. The motion was seconded by Council Member Allen, and carried unanimously.

RESOLUTION NUMBER 2848

RESOLUTION OF THE MAYOR AND COUNCIL OF CITY OF COTTONWOOD, ARIZONA, APPROVING THE FORM AND AUTHORIZING THE EXECUTION AND DELIVERY OF A SECOND PURCHASE AGREEMENT, A SECOND TRUST AGREEMENT, AN ESCROW TRUST AGREEMENT, A CONTINUING DISCLOSURE UNDERTAKING, AN OBLIGATION PURCHASE CONTRACT AND OTHER NECESSARY AGREEMENTS, INSTRUMENTS AND DOCUMENTS; APPROVING THE SALE AND EXECUTION AND DELIVERY OF NOT TO EXCEED $13,075,000 AGGREGATE PRINCIPAL AMOUNT OF PLEDGED REVENUE REFUNDING OBLIGATIONS EVIDENCING A PROPORTIONATE INTEREST OF THE OWNERS THEREOF IN THE PURCHASE AGREEMENT; DELEGATING AUTHORITY TO THE MAYOR, MANAGER AND FINANCE DIRECTOR OF THE CITY TO DETERMINE CERTAIN MATTERS AND TERMS WITH RESPECT TO THE FOREGOING; AUTHORIZING THE TAKING OF ALL OTHER ACTIONS NECESSARY TO THE CONSUMMATION OF THE TRANSACTIONS CONTEMPLATED BY THIS RESOLUTION AND DECLARING AN EMERGENCY.

RESOLUTION NUMBER 2842--ENCOURAGING CONGRESS TO CREATE A RELIABLE, PREDICTABLE STREAM OF RESOURCES TO ADDRESS DEFERRED MAINTENANCE NEEDS IN AMERICA'S NATIONAL PARK SYSTEM

Diane Rhoades, from Strategies 360, gave a brief presentation about the importance of the National Park System, and the need to fund repairs and improvements needed for the continued maintenance of the National Parks.

Council Member Pratt stated he spends a lot of time in the national parks, and there is a lot of health benefits of visiting the national parks.

Mayor Joens stated it is an economic driver for the city, and the state parks are facing the same issue.

Vice Mayor Pfeifer moved to approve Resolution Number 2842 to encourage Congress to provide funding for maintenance of the National Park System. The motion was seconded by Council Member Pratt and carried unanimously.

Mayor Joens requested the Deputy Clerk read Resolution Number 2842 by title only.

RESOLUTION NUMBER 2842

A RESOLUTION OF THE MAYOR AND CITY COUNCIL OF THE CITY OF COTTONWOOD, ARIZONA, ENCOURAGING CONGRESS TO CREATE A RELIABLE, PREDICTABLE STREAM OF RESOURCES TO ADDRESS DEFERRED MAINTENANCE NEEDS IN AMERICA'S NATIONAL PARK SYSTEM.

VERDE RIVER RECREATION PLAN

Casey Rooney introduced Kim Schonek, from the Nature Conservancy, who helped spearhead the finding of a grant.

Ms. Schonek thanked the council for being part of the process and for promoting the Verde River that is important to our communities.

Mr. Rooney stated the Nature Conservancy provided us with a grant for $45,000 from the Walton Family Foundation to complete the Verde River Recreation Plan.

Brian Sager and Aaron Hayne, from Norris Design, reviewed the Recreation Plan. The plan's purpose is to develop a community supported, long range plan to connect Cottonwood's community assets to the existing network of regional trails; plan a local system of multi-purpose paths/trails within Cottonwood that provides connectivity for everyday destinations; connect Old Town with the Verde River Recreation Area and Riverfront Park; and promote recreation opportunities throughout Cottonwood. There is an extensive trail system connecting Sedona, Coconino and Prescott National Forests, and this plan hopes to connect to the existing trail system. They did a public outreach in regards to the plan and received 117 attendees over five meetings. Based on community input, the proposed trail system would be divided into three long term phases with a combination of hard paths in urban areas and soft trails in natural resource areas. The proposed trail system would have new signage, benches and maps outlining the area.

Mayor Joens thanked the Nature Conservancy and the Walton Family Foundation for realizing that this is something that needs to be done and helping us get it done.

Mr. Hayne stated there are some grants available to help pay for completing the plan. The one they were looking at is from the Land and Water Conservation fund which is administered by Arizona State Parks. You could use that money to build some sign kiosks or additional design work. There is also the FAST Act which is a federal grant source, which could be used for roads, alternative transportation such as paved pathways, and trails. The

plan has some soft service trails and paved trails. The FAST Act is administered through ADOT. There are a variety of other sources. These grants will sometimes need matching funds, but in order to create a long-term sustainable funding source it is probably a good idea to implement an impact fee program.

Mayor Joens stated the state made it very difficult to initiate any kind of impact fees.

Mr. Horton stated there is a whole process that we have to go through with studies and findings and justifications, and costs for the necessary public improvements we would be installing with any impact fees. It is something we could look into, but the legislature made it a whole lot harder, especially for things other than core public services like utilities.

Mayor Joens stated impact fees might work, but we would have to a lot of red tape probably and a lot of expensive studies to get there.

Mr. Hayne stated it might pay off. They have made it more difficult, but it is not impossible. We have worked with Marana and Tucson to help them develop their impact fee program. If you get a grant you could probably buy two or three miles, and then you have to get another grant. You can do it, but it becomes a little more piecemeal, and pretty soon it is 20 years on and you haven't gotten it all in place. Impact fees might be the long term solution to make the plan implemented.

Council Member Pratt moved to approve the proposed Verde River Recreation Plan as presented. The motion was seconded by Council Member Allen, and carried unanimously.

RESOLUTION NUMBER 2847--APPOINTING CYNTHIA BURTON A MEMBER OF THE CITY OF COTTONWOOD PARKS AND RECREATION COMMISSION AND ESTABLISHING HER TERM OF OFFICE

Mr. Faust stated there were three term expirations on the Parks and Recreation Commission in August; Cindy Burton, Al Hilberger, and Carol Nielson. They only received one application from Cindy Burton. She has been very active on the Commission and likes working directly with the Parks and Recreation staff.

Council Member Pratt moved to approved Resolution Number 2847 appointing Cindy Burton as a member of the Parks and Recreation Commission for a three-year term. The motion was seconded by Vice Mayor Pfeifer, and carried unanimously.

WAIVER OF MUNICIPAL CODE SECTION 8.52.020, CAMPING ON PUBLIC PROPERTY, TO ALLOW OVERNIGHT CAMPING AT THE OLD TOWN ACTIVITY PARK DURING THE THUNDER VALLEY RALLY EVENT SCHEDULED FOR SEPTEMBER 16-18, 2016

Mr. Allen stated we were approached through a partnership with one of the local adventure companies, and there is a company down in Phoenix, Stout Tents, which manufacture their own tents. They also do events such as Bonnaroo and other large festivals. We also used

this idea with Tilted Earth to moderate success, but we are hoping that it catches on as people start understanding what this concept is. Thunder Valley Rally has a lot of people coming to the area and are looking for places to stay. We also have a lot of individuals on motorcycles that don't have a lot of luggage space. We are going to be using the Old Town activity park that is close to the event. Stout Tents would offer the packages, sell the packages through their website, and we will receive 20 percent of each package sold. We will not be opening the Old Town activity park to campers in general, because we don't want every two square feet taken up with a tent that could cause a hazard.

Council Member Allen stated it is great idea to do that, because when you go out to a national park and you camp out in a crowded spot you can end up stepping on each other's toes and get a little grumpy.

Council Member Pratt moved to approve a waiver of Cottonwood Municipal Code Section 8.52.020, to allow overnight camping at the Old Town Activity Park during the Thunder Valley Rally event on Sept. 16-18, 2016. The motion was seconded by Vice Mayor Pfeifer, and carried unanimously.

CLOSURE OF MAIN STREET, BETWEEN PIMA AND CACTUS STREET, AND CITY PARKING LOTS IN OLD TOWN, DURING THE THUNDER VALLEY RALLY EVENT SCHEDULED IN OLD TOWN FROM SEPTEMBER 16-18, 2016

Mr. Allen showed a map of Old Town with Main Street closed off for the Thunder Valley Rally event. The merchants in Old Town really want to make sure we don't divert all traffic up Willard and around to visit. They feel coming down Main Street and getting that view of Old Town with the stage at the bottom is imperative and helps brand the community and sell the event. Basically, traffic will come down Main Street and turn left on Pima and down Cactus Street to get through the detour. Motorcycle parking will be from Willard to Pima, and from the Tavern all the way down to Cactus Street. The road will be blocked to just motorcycle parking only. All the vendors will be set up on the parking lots. The street will reopen on Sunday at 9:00 a.m. The closure will begin Friday at 4:00 a.m. They will be serving alcohol from the Old Town Jail parking lot and the Tavern parking lot.

Mayor Joens questioned if we could ask the Old Town Mission if we could use their empty lot for parking.

Mr. Allen stated that is private property and there might be some insurance problems, but he could approach them.

Mr. Allen stated the TVR committee tries to let the Old Town community know that we try to have the least impact on Old Town as possible.

Council Member Allen moved to authorize the closure of Main Street between Pima and Cactus Street, as well as the parking lots located at the City Council Chambers, Tavern Restaurant, Finance/HR, Civic Center, City Hall/Old Town Activity Park, and the Old Town

Jail; and to reserve on-street parking areas on Main Street between Willard Street and Pima Street for motorcycle parking only for the Thunder Valley Rally event September 16-18, 2016. The motion was seconded by Council Member Pratt, and carried unanimously.

CLAIMS/ADJUSTMENTS

Council Member Pratt moved to pay the claims. The motion was seconded by Vice Mayor Pfeifer, and carried unanimously.

ADJOURNMENT

Mayor Joens moved to adjourn. The motion was seconded by Council Member Allen, and carried unanimously. The meeting adjourned at 8:05 p.m.

City of Cottonwood, Arizona
City Council Agenda Communication

Print

Meeting Date:	September 6, 2016
Subject:	Cooperative use of the City of Goodyear contract by the City of Cottonwood to allow a bulk purchase of water meters and related equipment.
Department:	City Clerk
From:	Utilities-Water, Roger Biggs

REQUESTED ACTION

Approval for the cooperative use of the City of Goodyear contract to purchase Water Meters and related equipment required to operate the City's water system.

SUGGESTED MOTION

If the Council desires to approve this item the suggested motion is:

"I move to approve the cooperative use of the City of Goodyear contract for the purchase of water meters and related products from HD Waterworks Group, Inc. for a total $59,782.92."

BACKGROUND

Staff recommends using the City of Goodyear's agreement with HD Waterworks, which is the result of a competitive procurement process, to purchase just under $60,000.00 on water meters and related equipment for the City's water utility. This method of procuring this equipment is authorized under ARS §41-2632 and the City's purchasing policy.

The approval of the contract will provide the City with replacement and new construction meters reducing water loss and ensuring compliance with the City's residential fire sprinkler ordinance. On a system-wide basis, meters, meter reading equipment and software manufactured by Neptune Technology Group and are supplied through HD Supply Waterworks Inc. to maintain compatibility and system security. Staff is requesting that Council review and award the contract in the amount of $59,782.92 for the purchase of 400 Neptune Technologies Water Meters and related equipment to HD Waterworks Group, Inc.

JUSTIFICATION/BENEFITS/ISSUES

An ongoing meter replacement program reduces unmetered water loss and increases system accuracy.

COST/FUNDING SOURCE

Water Department capital funds, approved in FY 2017 budget.

ATTACHMENTS:		
Name:	Description:	Type:
Co-Op_Agreement.pdf	COOPERATIVE PURCHASING AGREEMENT	Backup Material
Cooperative_Purchase_Agreement_-_HD_Supply.pdf	COOPERATIVE PURCHASE AGREEMENT-HDS	Backup Material
Goodyear_Agreement.pdf	Goodyear Contract	Backup Material
HDS_Quote.pdf	HD Supply Waterworks Quote	Backup Material

CITY OF COTTONWOOD
COOPERATIVE PURCHASING AGREEMENT

This Agreement entered into this 6th day of September, 2016 between the City of Cottonwood hereinafter called the "City" and the City of Goodyear, a public procurement unit, hereinafter called "eligible procurement unit," to permit the eligible procurement unit to purchase materials and services from vendors at the prices and terms contained in contracts between the City of Cottonwood and those vendors. Any eligible procurement unit may enter into an Agreement with the City of Cottonwood Department of Procurement for the purpose of utilizing their respective cooperative contracts. (Arizona Revised Statutes Section 41-2632).

In consideration of the mutual promises contained in this Agreement, and of the mutual benefits to result thereof, the parties agree as follows:

1. The City shall make available certain contracts to the eligible procurement units.

2. For those contracts awarded by the City, specifications for the materials and services will be determined by the City of Cottonwood Department of Procurement.

3. City procurement processes shall be conducted in accordance with the City's Charter (Chapter 28), the City Procurement Code and City Department of Procurement administrative policies and procedures. The eligible procurement unit will insure that its own legal requirements are met and shall be responsible for any additional actions that may be necessary to meet those requirements.

4. The City may invite an eligible procurement unit to participate in any solicitation.

5. The eligible procurement unit shall:
   a. Insure that purchase orders issued against eligible City contracts are in accordance with the terms and prices established in the City contract.
   b. Make timely payments to the vendor for all materials and services received in accordance with the terms and conditions of the City contract. Payment for materials or services and inspection and acceptance of materials or services ordered by the eligible procurement unit shall be the exclusive obligation of such unit.
   c. Not use a City contract as a method for obtaining additional concessions or reduced prices for contracted materials or services. The eligible procurement unit shall not advertise or market City contracts without the City's prior written consent.
   d. Be responsible for ordering materials or services under this agreement. The City shall not be liable in any fashion for any violation by eligible procurement unit of this agreement, and the eligible procurement unit shall be responsible for any liability which may arise from action or inaction of the eligible procurement unit relating to this agreement or its subject matter.

6. The exercise of any rights or remedies by the eligible procurement unit shall be the exclusive obligation of such unit; however, the City, as the contract administrator and without subjecting itself to any liability, may join in the resolution of any controversy should it so desire.

7. The City may terminate this Agreement if the eligible procurement unit fails to comply with the terms of a City contract.

8. This Agreement shall take effect upon execution by the parties and shall continue until it is terminated in accordance with its terms. This Agreement supersedes any and all previous cooperative purchase agreements.

9. Either party may terminate this Agreement with at least thirty- (30) days written notice to the other party.

10. Failure of the eligible procurement unit to secure performance from the contractor in accordance with the terms and conditions of its purchase order does not necessarily require the City to exercise its own rights or remedies.

11. This Agreement may be cancelled pursuant to the provisions of A.R.S. 38-511.

12. This Agreement is exempt from the provisions of A.R.S. 11-952, Subsections D and F under provision of A.R.S. 41-2632.

13. The City and the eligible procurement unit agree not to discriminate against any employee or applicant for employment in violation of the terms of Federal Executive Order 11246 and State Executive Order No. 99-4, A.R.S. 41-1461 et. seq.

14. Appropriate action by ordinance, resolution or otherwise pursuant to the laws applicable to the eligible procurement unit shall be necessary before this agreement becomes effective.

IN WITNESS WHEREOF, the parties of this Agreement have caused their names to be affixed hereto by their proper officers on the dates indicated.

Eligible Procurement Unit

City of Goodyear _____ _____
Eligible Procurement Unit Name Printed Name

_____ _____
Signature Date of Signing

_____
Title

City of Cottonwood

_____ _____
Diane Joens, Mayor Date of Signing

Attest:

_____
Marianne Jimenez, City Clerk

Approved as to form:

_____
Steve Horton, City Attorney

COOPERATIVE PURCHASE AGREEMENT

THIS AGREEMENT (The "Agreement") is made and entered into effective as of September 6th, 2016 (the "Effective Date"), by and between the City of Cottonwood, Arizona, an Arizona municipal corporation ("City"), and HD Supply Waterworks Group, Inc. ("Vendor"). The City and the Vendor are sometimes referred to in this Agreement collectively as the "Parties" and each individually as a "Party."

RECITALS:

The Parties wish to enter into an Agreement pursuant to the terms and conditions of that outside contract for the purchase of water system products and all subsequent revisions, between The City of Goodyear Cooperative Agreement and the Vendor (the "Original Contract.") Such action is authorized under A.R.S. §41-2632. All capitalized terms used without definition in this Agreement shall have the definitions ascribed to them in the Original Contract.

AGREEMENTS:

NOW, THEREFORE, for and in consideration of the foregoing Recitals and other good and valuable consideration, the receipt and sufficiency of which are hereby acknowledged, the Parties hereby agree to the terms of the Original Contract as follows:

1. Reaffirmation of Original Contract. The Original Contract shall remain in full force and effect, and all terms and conditions of the Original Contract are hereby incorporated by reference into this Agreement, creating an agreement identical in terms between the City and the Vendor. In the event of any conflict between this Agreement and the Original Contract, the terms of this Agreement shall prevail. In the Original Contract, the terms "City of Goodyear" shall be deemed to be and refer to the City, and the term "Vendor" shall be deemed to be and refer to HD Supply Waterworks Group, Inc. under this Agreement. The amount paid under this Agreement shall be an amount as per the rates as set forth in agreement number CON-16-3378A facilitated by The City of Goodyear.

2. Counterparts. This Agreement may be executed in one or more counterparts, each of which shall be deemed an original, but all of which together shall constitute one and the same instrument, binding on all of the Parties. The Parties agree that this Agreement may be transmitted between them via facsimile. The Parties intend that the faxed signatures constitute original signatures and that a faxed agreement containing the signatures (original or faxed) of all the Parties is binding upon the Parties.

3. Compliance with Federal and State Laws.

3.1 The Vendor understands and acknowledges the applicability to it of the American with Disabilities Act, the Immigration Reform and Control Act of 1986 and the Drug Free Workplace Act of 1989. The Vendor understands and acknowledges that it must also comply with A.R.S. § 34-301, "Employment of Aliens on Public Works Prohibited", and A.R.S. § 34-302, as amended, "Residence Requirements for Employees."

3.2 Pursuant to the provisions of A.R.S. §41-4401, the Vendor warrants to the City that the Vendor and all its subcontractors are in compliance with all Federal Immigration laws and regulations that relate to their employees and with the E-Verify Program under A.R.S. §23-214(A).

A breach of this warranty by the Vendor or any of its subcontractors will be deemed a material breach of this Contract and may subject the Vendor or subcontractor to penalties up to and including termination of this Contract or any subcontract.

The City retains the legal right to inspect the papers of any employee of the Vendor or any subcontractor who works on this Contract to ensure that the Vendor or any subcontractor is complying with the warranty given above.

The City may conduct random verification of the employment records of the Vendor and any of its subcontractors to ensure compliance with this warranty.

The City will not consider the Vendor or any of its subcontractors in material breach of this Contract if the Vendor and its subcontractors establish that they have complied with the employment verification provisions prescribed by 8 USCA §1324(a) and (b) of the Federal Immigration and Nationality Act and the E-Verify requirements prescribed by A.R.S. §23-214(A). The "E-Verify Program" means the employment verification pilot program as jointly administered by the United States Department of Homeland Security and the Social Security Administration or any of its successor programs.

The provisions of this Article must be included in any contract the Vendor enters into with any and all of its subcontractors who provide services under this Contract or any subcontract. "Services" are defined as furnishing labor, time or effort in the State of Arizona by a Vendor of subcontractor. Services include construction or maintenance of any structure, building or transportation facility or improvement to real property.

3.3 This Agreement is subject to cancellation for conflicts of interest pursuant to A.R.S. § 38-511.

4. The City may terminate this Agreement at any time for its convenience by written notice to HD Supply Waterworks Group, Inc. specifying the termination date. In the event of termination which is not the fault, in whole or in part, of the HD Supply Waterworks Group, Inc., City shall pay to Vendor only such compensation, including reimbursable expenses, due for Work properly performed on the Project prior to the termination date. Upon any termination of the Agreement, no further payments shall be due from City to HD Supply Waterworks Group, Inc. unless and until HD Supply Waterworks Group, Inc. has delivered to City any and all documentation required to be maintained by HD Supply Waterworks Group, Inc. or provided by HD Supply Waterworks Group, Inc. to City.

5. All warranties, representations and indemnifications by HD Supply Waterworks Group, Inc. shall survive the completion or termination of this Agreement.

6. The Vendor shall provide the products for sale at the prices as specified in agreement #CON-16-3378A facilitated by The City of Goodyear attached hereto and incorporated herein. Unless expressly excluded, in writing, in the Agreement, the Services shall include any and all services reasonably contemplated, normally included, and necessary to complete the Services set forth in a good and workmanlike manner with due diligence and, at a minimum, in conformance with generally accepted industry standards and standard of care for like professionals in the same geographic area.

THE REST OF THIS PAGE INTENTIONALLY LEFT BLANK

IN WITNESS WHEREOF, the Parties have executed this Agreement effective as of the Effective Date set forth above.

City of Cottonwood, an Arizona municipal corporation

Date: _____

By:_____
Mayor Diane Joens

Attest:_____
City Clerk Marianne Jiminez

Approved as to form:

By:_____
Steve Horton
City Attorney

HD Supply Waterworks Group, Inc.

Date: _____

By:_____

Its: _____

CONTRACT COVER SHEET

For Contract Review - please route Contract through Fernando Camacho in Finance, Ext. # 7844.
A contract number will be assigned when it starts the review process.
NOTE: Contract Numbers will not be issued via email or over the telephone.

Please fill out this form completely or it will be returned to you prior to review, approval, or filing in LaserFiche.
If a response is not applicable, please use "N/A" - Do Not Leave Any Blanks.

Date Submitted for Review: 11/24/15

Type (check one):

Construction ☐ Contract ☒ Change Order/Modification ☐ #NA *Drop Down*
IGA ☐ Development Agreement ☐ Amendment ☐ #NA *Drop Down*
Easement ☐ Lease/Property Acquisition ☐ Other ☐ (please specify):

IDENTIFYING INFORMATION: (Please fill in each field)

Requesting Dept., Contact Name, Ext. #:
Ray Diaz, Municipal Services, Ext. 7593
Contractor Name, Address, Tel. No.:
HD Supply Waterworks, LTD
1410 W Harvard Avenue
Gilbert, AZ 85233
Thomas Otto
623-734-6115
thomas.otto@hdsupply.com
Assigned Contract Number: **CON - 16-3378A**

Link to: _____

Brief Summary of the Services to be provided:
Water Meters
Terms:
Start: **12/1/2015** Expire: **11/30/216 with option to renew for four (4) one-year periods**
Contract Amount: **$ 200,000**
Council Date: COAC # N/A ☒

City Clerk's Office Use – Retention Date: 01/02/2023

REVIEWED AND APPROVED:

☒ Procurement: _____ Date: 11/25/15 Contracts/Procured Services
☒ Legal: _____ Date: 11/30/15 All documents
☐ City Manager: _____ Date: _____ When required

CONTRACT REVIEW REQUIREMENTS

PROCUREMENT PROCESS – NOTE: IGAs, Easements, Lease/Property Acquisition and Development Agreements do not require Procurement Review. However, they must still be seen by Legal Services. All Contracts must be reviewed and signed off by Procurement or the City Manager & Legal Services prior to going to Council.

Designate what method you used to arrive at this contract and whether the item is budgeted for:

☐ Less than $5000 ☐ $5,000 to $50,000 – 3 written quotes ☐ Cooperative Agreement ☐ On-Call /Task Order

☒ Formal Solicitation, Incl. Solicitation Number: **OP-** 16-3378

☐ Other – please name (e.g., sole source, demo, etc. & attach RAP (Request for Alternate Procurement) approved by Procurement Manager.

Budgeted: ☒ **Yes** ☐ **No** **Requires Council Action: Yes** ☐ **No** ☒ **If yes, Council Date:** ____ **Attach COAC**

Additional Funding Source? ☐ **Federal – Identify:** ____ ☐ **State – Identify:** ____

☐ **Grant/Other – Identify:** ____ ***Attach all supporting documentation for funding source.**

ADDITIONAL COMMENTS? ____

INSURANCE & BONDS (To be completed by Procurement Specialist)

Insurance Certificate:	☒ Attached	VJ Initial	Date: 11/24/15
Bid Bond:	☐ Attached	____ Initial	Date: _____
Performance Bond:	☐ Attached	____ Initial	Date: _____
Payment Bond:	☐ Attached	____ Initial	Date: _____

Goodyear ARIZONA	**CITY OF GOODYEAR** **Offer and Acceptance** CONTRACT NO. CON-16-3378A	Office of Procurement 190 N. Litchfield Road P.O. Box 5100 Goodyear, AZ 85338 Phone: 623-882-7845

DESCRIPTION OF SERVICES: Water Meters

OFFER

To the City of Goodyear: The undersigned Contractor hereby offers and agrees to furnish the Services and/or material(s) in compliance with this Contract, as the term Contract is defined in this document.

By signing and submitting this Offer, Contractor certifies and warrants that Contractor: has read, understands and agrees to comply with the Contract as defined here; has no known, undisclosed conflict of interest; has not made an offer of any gift(s), payment(s) or other consideration to any City employee, elected official who has or may have had a role in the procurement process for this Contract; v) pursuant to A.R.S. § 41-4401, Contractor and its subcontractors will comply with all immigration laws and regulations that relate to its employees and A.R.S. § 23-214; and the signatory is an officer or duly authorized agent of the Contractor with full power and authority to submit binding offers for the goods and/or services as specified herein.

Arizona Transaction (Sales): 20056616

Arizona Contractor License Number:

Privilege Tax License # 03-0550887

City of Goodyear Business Registration No.:

For clarification of this offer contact:

Name: Thomas Otto

Telephone: 623.734.6115

E-Mail Address: thomas.otto@hdsupply.com

HD Supply Waterworks, LTD
Company Name

Sign: _____
Authorized Signature for Offer

1410 W Harvard Ave
Address

Thomas Otto
Printed Name

Gilbert, AZ 85233
City State Zip Code

Account Manger 10/02/15
Title Date

ACCEPTANCE OF OFFER AND CONTRACT AWARD (For City of Goodyear Use Only)

Contractor's Offer is hereby accepted and a Contract awarded by the City. Contractor is now bound to provide the materials and/or services as specified in Scope of Work of this Contract. Contractor shall not start any billable work or provide any material/services until the Contractor receives an executed purchase order or written notice to proceed.

N/A
City Manager, City of Goodyear (if applicable)

Attested by:

Maureen Scott
Maureen Scott, City Clerk

City Seal

Official File

City of Goodyear, Arizona. Eff. Date: 12/1/15

Awarded on 11/25/15

Approved as to form:

Rise S. Wahl for
Roric Massey, City Attorney

Jacque Behrens, CPPB, Procurement Manager

- ORIGINAL -

HDSUPPLY
WATERWORKS

Thomas Otto
Account Manager
P: 623 734 6115
Thomas.otto@hdsupply.com

Victoria Jackson, CPPB
City of Goodyear
190 N Litchfield Rd.
PO Box 5100
Goodyear, AZ 85338

October 2, 2015

Re: IFB 16-3378, Water Meters

Ms. Jackson:

HD Supply is pleased to present this response to IFB 16-3378 for Water Meters. In addition to the pricing requested for the items in groups A-G, HD Supply has also submitted pricing for other water meter and meter reading products that may be of use to the City.

Also, HD Supply has submitted pricing for items A – C using Neptune Touch Coupler Water Meters. These meters are mechanically the same as the meters submitted in section D – G, however they have been modified for use with the Sensus electronics. These are offered as an alternate to the Sensus products requested.

Finally, you will find one original, one copy and three thumb drives enclosed in our bid package. Each of the thumb drives will have an electronic file of the bid, the amendments, our product literature, our list price sheet, and our additional submittal information. A thumb drive is included to accompany the original and the copy of the bid, as well as a stand-alone electronic copy as requested in the bid documents.

Thank you for the opportunity and please feel free to contact me with any questions or concerns.

Best Regards,

Thomas Otto

	CITY OF GOODYEAR	Office of Procurement 190 N. Litchfield Road P.O. Box 5100 Goodyear, AZ 85338 Phone: 623-882-7845
	Invitation For Bid	

Solicitation Number: 16-3378

Materials and/or Service: Water Meters

Solicitation Due Date: October 8, 2015 **Time:** 3:00 pm (Arizona Time)

Mailing Address: City of Goodyear, City Hall Front Desk
190 North Litchfield Road
P.O. Box 5100
Goodyear, AZ 85338

Procurement Specialist: Victoria Jackson, CPPB
Phone: (623) 882-7845
Fax: (623) 882-7890
Email: Victoria.jackson@goodyearaz.gov

All bids must be received by the City of Goodyear, City Hall Front Desk, at the specified location by the date and time cited above. Late bids will not be considered. Bids received by the correct date and time shall be publicly opened and read. Bidders are advised to carefully read the entire Solicitation Package. Bids that do not comply with all Instructions to Bidders may be disqualified.

Bidders must register as a vendor with the City of Goodyear at https://procurement.goodyearaz.gov/bso/ to obtain a solicitation packet. Solicitation packages can be obtained by downloading from the City of Goodyear's website: www.goodyearaz.gov and following these instructions: Enter City website, click on BUSINESS, click on Vendor Services/Procurement, click on Solicitations for Bids/Proposals, click on IFB 16-3378. Should you experience problems downloading the solicitation, contact Victoria Jackson, CPPB at the above email address.

All communications concerning this solicitation must be directed to responsible Procurement Specialist identified above, via email only. Communications with other city staff may disqualify you from the evaluation process.

OFFERORS ARE STRONGLY ENCOURAGED TO READ THE ENTIRE SOLICITATION

Published in the Arizona Republic Southwest Section on: September 23, 2015, and September 25, 2015

SECTIONS	**PAGE**
Notice Page	1
Table of Contents	2
Instructions to Bidders	3
Standard Terms and Conditions	7
Special Terms and Conditions	22
Specifications	25
Fee Schedule	28
Offer and Acceptance	34

1. PREPARATION OF OFFER

a. It is the responsibility of all Bidders to examine the entire solicitation package and seek clarification from the responsible Procurement Specialist of any item or requirement that may not be clear, and to check all responses for accuracy before submitting a bid.

b. All offers shall be on the forms provided in the solicitation package. It is permissible to copy these forms if required. Telegraphic (facsimile) or email bids will not be considered

c. The Offer and Acceptance document shall be returned with the submittal with an original blue ink signature by a person authorized to sign the Offer. Pricing documents and other documents which require information to be filled in must be done in ink, typewritten or computer printed. No bids will be accepted if pencil is used. Erasures, interlineations, or other modifications in the bid shall be initialed in original blue ink by the authorized person signing the bid.

d. It is the Bidder's responsibility to obtain a copy of any addenda relevant to this solicitation. Failure to submit addenda with the solicitation response may be grounds for deeming a bid non-responsive.

e. Bids shall be submitted in a sealed envelope provided by the Bidder, and should include the Bidder's name, address and solicitation number on outside of the sealed envelope/package.

f. Periods of time, stated as a number of days, shall be calendar days.

g. It is the responsibility of the Bidder to submit the bid at the place and by the time provided in the solicitation.

h. Negligence in preparing a bid confers no right of withdrawal after the due date and time of the bid. No bid shall be altered, amended, or withdrawn after the specified offer due date and time.

i. Offers shall include all costs as described and indicated by the specifications. The City is exempt from Federal Excise Tax, including the Federal Transportation Tax. Sales tax, if any, shall be indicated as a separate item.

j. If price is a consideration, and in case of error in the extension of prices in the bid, the unit price shall govern.

k. The City shall not reimburse the cost of developing, presenting, or providing any responses to this solicitation. Bids submitted for consideration should be prepared simply and economically, providing adequate information in a straightforward and concise manner.

l. Bidder shall submit one (1) original, marked "original" and one (1) copy of their bid with their submittal. Bid shall be submitted single-sided and one (1) CD-ROM of the proposal containing all original documents.

2. SERIAL NUMBERS

Bids shall be for equipment on which the original manufacturer's serial number, if applicable, has not been altered in any way. Throughout the contract term, the City reserves the right to reject any altered equipment.

3. BRAND NAMES

Any manufacturer's names, trade names, brand names, or catalog numbers used in the specifications are for the purposes of describing and establishing the quality level, design and performance desired. Such references are not intended to limit or restrict bidding by other vendors, but are intended to establish the quality, design or performance which is desired. Any Bidder which proposes equal or greater quality, design or performance may be considered. The city has the sole authority to accept or reject any like items.

4. SUBSTITUTIONS OR EXCEPTIONS

The City reserves the option to not consider bids for award if the Bidder: i) takes any exception to the specifications and the City does not agree or accept the proposed changes; or ii) proposes a unit which does not meet the City's specifications exactly and the Bidder does not additionally propose the specified unit prior to bid opening, and the City rejects the alternative identified.

5. DESCRIPTIVE LITERATURE

All bidders shall include complete manufacturer's descriptive literature regarding the equipment and goods they propose to furnish. Literature shall be sufficient in detail in order to allow full and fair evaluation of the bid submitted. Failure to include this information may result may result in the bid being rejected.

6. PREPARATION OF SPECIFICATIONS BY PERSONS OTHER THAN CITY PERSONNEL

All specifications shall seek to promote overall economy for the purposes intended and encourage competition and not be unduly restrictive in satisfying the City's needs. No person preparing specifications shall receive any direct or indirect benefit from the utilization of specifications, other than fees paid for the preparation of specifications.

7. INQUIRIES

Any questions related to the solicitation shall be directed to the responsible Procurement Specialist whose name appears on the front page **via email only**. The Bidder shall not contact or ask questions of other City staff or the City department for which the requirement is being procured. Any correspondence related to a solicitation should refer to the solicitation number, page, and paragraph number. All questions must be submitted no later than the close of business five (5) calendar days prior to the opening date.

8. PRE-BID CONFERENCE

Not applicable for this solicitation.

9. LATE BIDS/MODIFICATIONS/WITHDRAWALS

Bids, modifications of bids, and withdrawals received *after* the due date and time specified for receipt will be rejected and returned to the Bidder unopened. A Bidder (or designated representative) may withdraw

their bid via email to the responsible Procurement Specialist any time *prior* to the solicitation due date and time.

10. PUBLIC RECORD/CONFIDENTIAL INFORMATION

All bids submitted in response to this solicitation shall become the property of the City and shall become a matter of public record available for review, subsequent to the award. If the Bidder believes that any information provided throughout the procurement process should be withheld as confidential, it is the responsibility of the Bidder to submit to the Procurement Manager a statement when the confidential information is submitted which identifies those items the Bidder believes to be confidential and the legal reason(s) why they are confidential. The Procurement Manager shall review the request for confidentiality and advise the Bidder in writing if the information will be treated as confidential by the City. If the City receives a public records request for any of the information determined to be confidential by the Procurement Manager, the City will use reasonable efforts to give notice to the Bidder prior to the release of the information.

11. BID ACCEPTANCE PERIOD

In order to allow for an adequate evaluation, the City requires a bid in response to this Solicitation to be valid for one hundred twenty (120) days after the opening time and date.

12. DISCUSSIONS

The City reserves the right to conduct discussions with Bidders for the purpose of eliminating minor irregularities, informalities, or apparent clerical mistakes in the submittal in order to clarify a bid and assure full understanding of, and responsiveness to, solicitation requirements.

13. PERSONNEL

It is essential that the Bidder provide adequate experienced personnel, capable of and devoted to the successful accomplishment of the work to be performed in this Solicitation. The Bidder agrees that those persons identified in their submittal shall not be removed or replaced without a written request to and approval from the City.

14. AWARD OF CONTRACT

a. The contract will be awarded pursuant to the provisions of the City of Goodyear Procurement Code. Unless the Bidder states otherwise, or unless provided within this solicitation, the City reserves the right to award by individual line item, by group of line items, or as a total, whichever is deemed most advantageous to the City. Notwithstanding any other provision of this solicitation, the Procurement Manager further reserves the right to i) waive any immaterial defect or informality; ii) reject any or all bids, or portions thereof; iii) reissue the solicitation; or iv) modify or cancel this solicitation.

b. A response to a solicitation is an offer to contract with the City based upon the terms, conditions and specifications contained in the City's solicitation and the written amendments thereto, if any. If City Council approval is necessary, bids do not become contracts unless and until they are accepted by the City Council. A contract is formed when written notice of award(s) is provided to the successful Bidder(s). The Contract has its inception in the award document, eliminating a formal signing of a separate contract.

c. In the event the City should receive two or more identical bids, the awardee will be determined by lottery.

15. BUSINESS REGISTRATION PERMIT

All Bidders awarded contracts with the City shall be required to obtain a City of Goodyear Business Registration Permit through the Goodyear Business Registration Office. For further information call Building and Safety, Myra Russell at (623) 882-7928 or myra.russell@goodyearaz.gov.

16. PROTESTS

a. Any interested party may protest a solicitation issued by the City or the proposed award or the award of a City Contract by submitting a request in writing with the Procurement Manager for the City of Goodyear, with a copy directed to the City Attorney for the City of Goodyear as follows:

Jacque Behrens, CPPB Procurement Manager City of Goodyear P.O. Box 5100 190 North Litchfield Road Goodyear, AZ 85338	Roric Massey City Attorney City of Goodyear P.O. Box 5100 190 North Litchfield Road Goodyear, AZ 85338

b. Writing: All protests must be in writing and shall include the following information:

- The name, address and telephone number of the protester;
- The signature of the protester or its representative;
- The solicitation or contract number;
- A detailed statement of the legal or factual grounds of the protest including copies of relevant documents; and
- The form of relief requested. R3-4-16.01

c. Time Frame: To be considered, protests must be filed during the time frame identified in the procurement code.

- *Protests of a solicitation* must be filed within five (5) days of the first advertising of the solicitation.
- *Protests of an award* must be filed within ten (10) days of the issue date of the Notice of Award or Notice of Intent to Negotiate and Award.

d. The Procurement Manager is required to notify all interested parties that a protest has been filed.

END OF INSTRUCTIONS TO OFFERORS

SECTION 1. DEFINITIONS

1.1 "City" means the City of Goodyear.

1.2 "City Manager" means the manager of the City of Goodyear or designee.

1.3 "Contract" means this Goods/Services Contract and any attachments referenced herein, fully completed and executed between the City of Goodyear and the Contractor.

1.4 "Contractor" means the individual, partnership, entity or corporation who, as a result of the competitive process, is awarded a contract by the City of Goodyear to provide goods and/or services.

1.5 "Days" means calendar days unless otherwise specified herein.

1.6 "Litigation Expense" means any court filing fee and costs, arbitration fees or costs, witness fee, arbitration fees, and each other fee and cost of investigating and defending or asserting any claim for indemnification under this Contract, including, without limitation, in each case, attorneys' fees, professional fees, disbursements and each other fee and cost of investigating and defending, appealing or asserting any claim for indemnification under this Contract.

1.7 "Loss" means any liability, loss, claim, settlement payment, cost and expense, interest, award, judgment, damages (including punitive damages), diminution in value, fines, fees and penalties or other charge, other than a litigation expense.

1.8 "Project" "Services" or "Work" means the subject matter of this Contract as more fully set forth in the attached Scope of Work, which may include delivery of goods and/or services.

1.9 "Subcontractor" means any individual, corporation, company, or other entity who contracts to perform work or render services or provide goods to a Contractor or to another subcontractor as part of this Contract with the City.

SECTION 2. TERM OF CONTRACT

2.1 The term of the contract may be automatically extended to include the warranty period.

2.2 Contractor shall not commence work until Contractor receives a purchase order signed by the City procurement manager or designee.

SECTION 3. COMPENSATION AND PAYMENTS

3.1 COMPENSATION: Total compensation to be paid under this Contract shall not exceed the purchase order amount.

3.2 Contractor shall invoice City on or before the 10th day of each month for goods and/or services provided under this contract during the prior month. All invoices shall contain itemized hourly fees, unit cost, extended cost of goods and supporting documentation for all invoiced amounts. All invoices to the City

shall identify the specific item(s) being billed and the Purchase Order number. Items are to be identified by the name, model number, and/or serial number most applicable.

3.3 City shall make every effort to process payments to Contractor within thirty (30) calendar days after the receipt of a correct and approved invoice, unless a good faith dispute exists to any obligation to pay all or a portion of the invoice or account.

3.4 PRICE ADJUSTMENT/CONTRACT EXTENSION: The City's Office of Procurement will review fully documented requests for price increase after any contract has been in effect for one (1) year. Any price increase adjustment will only be made at the time of contract extension and will be a factor in the extension review process. The Office of Procurement will determine whether the requested price increase or alternate option is in the best interest of the City. Any price adjustment will be effective upon the effective date of the contract extension.

3.5 PRICE REDUCTION: A price reduction may be offered at any time during the term of the contract and shall become effective upon notice.

3.6 LATE SUBMISSION OF CLAIM BY CONTRACTOR: The City will not honor any invoices or claims which are tendered one (1) year after the last item of the account accrued.

3.7 ESTIMATED QUANTITIES: Quantities identified in the Solicitation are the City's best estimate and do not obligate the City to order or accept more than the City's actual requirements during the period of this Contract as determined by actual needs and availability of appropriate funds. It is expressly understood and agreed that Contractor is to supply the City with its complete and actual requirements for the contract period.

3.8 PRODUCT DISCONTINUANCE: In the event that a product or model identified in the offer is subsequently discontinued by the manufacturer, the City at its sole discretion may allow the Contractor to provide a substitute for the discontinued item. The Contractor shall request permission to substitute a new product or model and provide all of the following:

1. A formal announcement from the manufacturer that the product or model has been discontinued;
2. Documentation from the manufacturer that names the replacement product or model;
3. Documentation that provides clear and convincing evidence that the replacement meets or exceeds all specifications required by the original solicitation;
4. Documentation that provides clear and convincing evidence that the replacement will be compatible with all the functions or uses of the discontinued product or model; and
5. Documentation confirming that the price for the replacement is the same as or less than the discontinued product or model.

3.9 USAGE REPORT: The Contractor may be required to provide a usage report to the Procurement Manager.

3.10 DISCOUNTS: Payment discounts will be computed from the date receiving acceptable goods, materials and/or services or correct invoice, whichever is later to the date payment is mailed.

3.11 NO ADVANCE PAYMENT: Advance payments will not be authorized; payment will be made only for actual goods or services that have been received.

3.12 FUND APPROPRIATION CONTINGENCY: The Parties recognize that the continuation of any contract after the close of any given fiscal year of the City of Goodyear, which fiscal year ends on June 30 of each year, shall be subject to appropriation and allocation of funds by the Goodyear City Council.

3.13 F.O.B. POINT: All prices are to be quoted F.O.B final destination, unless otherwise specified elsewhere in the solicitation.

3.14 TAXES: Contractor shall be solely responsible for any and all tax obligations that may result from Contractor's performance of this Contract.

SECTION 4. TERMINATION

4.1 TERMINATION FOR CONVENIENCE: City at any time and for any reason and without cause may terminate, suspend or abandon any portion, or all, of this Contract at City's convenience. In the event that the City terminates, suspends or abandons any part of the services, the City shall provide notice to the Contractor. Upon receipt of notice, the Contractor shall, unless the notice directs otherwise, immediately discontinue further services and placing of orders for materials, facilities and supplies in connection with the performance of this Agreement.

The Contractor shall appraise the services completed prior to receiving notice of the termination, abandonment or suspension and deliver to the City all drawings, special provisions, field survey notes, reports, estimates and any and all other documents or work product generated by the Contractor under the contract, entirely or partially completed, together with all unused materials supplied by the City.

In the event of termination, abandonment or suspension, Contractor shall be paid for services satisfactorily performed prior to receipt of such notice including reimbursable expenses then incurred. However, in no event shall the fee exceed that set forth in Section 4 of this Contract. Contractor shall not be entitled to any claim or claim of lien against Owner for any additional compensation or damages in the event of such termination and payment.

The City shall make final payment within thirty (30) days after the Contractor has fully complied with the provisions of Section 5 and Contractor submits a correct and approved final invoice for the fee that has been agreed to by the Parties.

4.2 Any attempt to represent any material and/or service not specifically awarded as being under contract with the City of Goodyear is a violation of the contract and the City of Goodyear Procurement Code. Any such action is subject to the legal and contractual remedies available to the City inclusive of, but not limited to, contract cancellation, suspension and/or debarment of the Contractor.

SECTION 5. RISK OF LOSS AND LIABILITY

5.1 INDEMNIFICATION: Unless a federal and state statute that expressly prohibits such indemnification, Contractor shall defend, indemnify, save and hold harmless the City of Goodyear, its officials, directors, officers, employees, agents, and representatives (hereinafter referred to as "Indemnitee") at all times after the date of this Contract from and against any and all Claims, caused by, relating to, arising out of, or alleged to have resulted from, in whole or in part, any negligent, reckless or intentional acts, errors, fault, mistakes, omissions, work, goods or service of the Contractor, its directors, officers, employees, agents,

representatives, or any tier of subcontractors or any other person for whose acts, errors, fault, mistakes omissions, work, goods or service the Contractor may be legally liable in the performance of this Contract. The Indemnification provided hereunder shall extend to Claims arising out of, or recovered under, Arizona's Workers' Compensation Law or the failure of Contractor to conform to any applicable and appropriate federal, state, or local law, statute, ordinance, rule, regulation or court decree. It is the specific intention of the Parties that the Indemnitee shall, in all instances, except for Claims arising solely from the negligent or willful acts or omissions of the Indemnitee, be indemnified by Contractor from and against any and all Claims. It is agreed that the Contractor will be responsible for primary loss investigation, defense and judgment costs where this indemnification is applicable.

In consideration of the award of this contract, Contractor agrees to waive all rights of subrogation against Indemnitee for Claims arising from the work performed by Contractor, its directors, officers, employees, agents, representatives, or any tier of subcontractors pursuant to this Contract. This indemnification provision shall survive the expiration or earlier termination of this Contract.

For purposes of this Indemnification provision the term Claims shall mean claims, suits, actions, demands, proceedings, losses, settlement payments, disbursements, expenses, and damages of every kind and description (including but not limited to costs, interest, awards, judgments, diminution in value, fines, penalties or other charges, reasonable attorneys' fees, other professionals' fees, court filing fees and costs, arbitration fees, witness fees, and each other fee and cost of investigating and defending, negotiating, appealing or asserting any claim for indemnification under this Contract) (collectively referred to "Litigation Expenses").

5.2 INDEMNIFICATION – PATENT, COPYRIGHT AND TRADEMARK: The Contractor shall indemnify and hold harmless the City against any liability, including costs and expenses, for infringement of any patent, copyright or trademark or other proprietary rights of any third parties arising out of contract performance or use by the City of materials furnished or Services performed under this Contract. The Contractor agrees upon receipt of notification to promptly assume full responsibility for the defense of any claim, suit or proceeding which is, has been, or may be brought against the City and its agents for alleged infringement, as well as for the alleged unfair competition resulting from similarity in design, trademark or appearance of goods by reason of the use or sale of any goods furnished under this Contract and the Contractor further agrees to indemnify the City against any and all expenses, losses, royalties, profits and damages including courts costs and attorney's fees resulting from the bringing of such suit or proceedings including any settlement or decree of judgment entered therein. The City may be represented by and actively participate through its own counsel in such suit or proceedings, it is so desires. It is expressly agreed by the Contractor that these covenants are irrevocable and perpetual.

5.3 TITLE AND RISK OF LOSS: The title and risk of loss of material or services shall not pass to the City until the City actually receives and accepts the materials or services at the point of delivery; and such loss, injury or destruction shall not release the Contractor from any obligation hereunder.

5.4 ACCEPTANCE: All materials or services are subject to final inspection and acceptance by the City. Materials or services failing to conform to the specifications of this Contract shall be held at Contractor's risk and may be returned to the Contractor. If returned, all costs are the responsibility of the Contractor. The City may elect to do any or all of the following: a) Waive the non-conformance; b) Stop the work immediately; c) Bring materials into compliance; and/or d) Terminate the Contract and seek all remedies available in law and in equity. This shall be accomplished by a written determination by the City.

5.5 LOSS OF MATERIALS: The City does not assume any responsibility, at any time, for the protection of or for the loss of materials, from the execution of this Contract until the final acceptance of the work by the City.

5.6 DEFAULT IN ONE INSTALLMENT TO CONSTITUTE TOTAL BREACH: Contractor shall deliver conforming materials in each installment of lot of this Contract and may not substitute nonconforming materials and/or services. Delivery of nonconforming materials or a default of any nature, at the option of the City, shall constitute a breach of the Contract as a whole.

5.7 SHIPMENT UNDER RESERVATION PROHIBITED: Contractor is not authorized to ship goods or perform services under reservation, and no tender of an invoice or bill of lading will operate as a tender of the goods or services.

5.8 WORK PERFORMED AT CONTRACTOR'S RISK: Contractor shall take all precautions reasonably necessary and shall be responsible for the safety of its employees, agents and subcontractors in the performance of the work hereunder and shall utilize all protections reasonably necessary for that purpose. All work shall be done at Contractor's own risk, and Contractor shall be responsible for any loss of or damage to materials, tools, or other articles used or held for use in connection with the work.

5.9 SAFETY STANDARDS: All items supplied pursuant to this Contract shall comply with the current applicable Occupational Safety and Health Standards of the State of Arizona Industrial Commission, the National Electric Code, and the National Fire Protection Association Standards.

5.10 PROJECT STAFFING: Prior to the start of any Services under this Contract, the Contractor shall submit to the City detailed resumes of key personnel that will be involved in performing Services prescribed in the Contract for review and approval. At any time hereafter that the Contractor desires to change key personnel while performing under the Scope, the Contractor shall submit the qualifications of the new personnel to the City for prior approval. Key personnel include but are not limited to the Contractor's principal-in-charge, project manager, project designer, project architect, system architect, system manager and system engineer.

The Contractor will maintain an adequate and competent staff of qualified persons throughout the performance of this Contract as necessary for acceptable and timely completion of the services. If the City objects, with reasonable cause, to any of the Contractor's staff, the Contractor shall take prompt corrective action and, if required, remove such personnel from the Project and replace them with the new personnel agreed to by the City.

5.11 SUBCONTRACTORS: Prior to beginning the work, the Contractor shall furnish the City for approval the names of subcontractors to be used on this Project. Any subsequent changes are subject to the approval of the City.

5.12 DAMAGE TO CITY PROPERTY: Contractor shall perform all work so that no damage to any City buildings or property results. Contractor shall repair any damage caused to the satisfaction of the City at no cost to the City. Contractor shall take care to avoid damage to adjacent finished materials that are to remain. If finished materials are damaged, Contractor shall repair and finish in a manner which matches existing material as approved by the City at the Contractor's expense.

5.13 FORCE MAJEURE: Neither Party shall be in default by reason of any failure in performance of this Contract if such failure arises out of causes beyond their reasonable control and without the fault or negligence of said Party including, unforeseeable Acts of God; terrorism or other acts of public enemy; war and epidemics or quarantine restrictions.

If either Party is delayed at any time in the progress of the Work by force majeure, the delayed Party shall notify the other Party in writing of such delay, as soon as is practical, of the commencement thereof and shall specify the causes of such delay in the notice. The notice shall be hand-delivered or mailed certified-return receipt and shall make a specific reference to this provision. The delayed Party shall cause such delay to cease as soon as practicable and shall notify the other party in writing when it has done so. The time of completion shall be extended by contract modification for a period of time equal to the time that results or effects of such delay prevent the delayed Party from performing in accordance with this contract.

SECTION 6. CONTRACT INTERPRETATION

6.1 DISPUTES, GOVERNING LAW, ATTORNEY FEES: Should any dispute, misunderstanding or conflict arise as to the terms or provisions contained in this Contract, the matter shall first be referred to the City, and the City shall determine the term or provision's true intent and meaning.

This Contract shall be deemed to be made under, shall be construed in accordance with, and shall be governed by the laws of the State of Arizona, without regard to choice of law or conflicts of laws principles thereof. Any action arising out of this Contract shall be commenced and maintained in the Superior Court of the State of Arizona in and for the County of Maricopa. The prevailing Party shall be reimbursed by the other Party for all attorney fees and all costs and expenses, including but not limited to all service of process, filing fees, court and court report costs, investigative costs, and expert witness fees which are incurred in any legal proceeding whatsoever arising out of this Contract, including, bankruptcy, arbitration, declaratory relief or other litigation, including appeals or rehearing.

6.2 PROVISIONS REQUIRED BY LAW: Each and every provision of law and any clause required by federal, state or local law to be in this Contract shall be read and enforced as though it were included herein and if through mistake or otherwise any such provision is not inserted, or is not correctly inserted, then upon the application of ether Party the Contract shall forthwith be physically amended to make such insertion or correction.

6.3 PAROL EVIDENCE: This Contract is intended by the parties as a final expression of their agreement and is intended also as a complete and exclusive statement of the terms of this agreement. No course of prior dealings between the parties and no usage in trade shall be relevant to contradict, supplement or explain any term used in this Contract.

6.4 SEVERABILITY: If any provision in this Contract or the application thereof to any person or circumstance shall be invalid, illegal or unenforceable to any extent, the remainder of this Contract and the application thereof shall not be affected and shall be enforceable to the fullest extent permitted by law.

6.5 CONTRACT ORDER OF PRECEDENCE: In the event of a conflict in the provisions of the Contract, as accepted by the City and as they may be amended, the following shall prevail in the order set forth below:

1. Special Terms and Conditions
2. Standard Terms and Conditions

3. Specifications
4. Fee Schedule
5. Attachments
6. Exhibits
7. Invitation to Bid, Instructions to Bidders and other documents referenced or included.

6.6 INTEGRATION: This Contract contains the full agreement of the parties hereto. Any prior or contemporaneous written or oral agreement between the parties regarding the subject matter hereof is merged and superseded hereby.

6.7 INDEPENDENT CONTRACTOR: Each Party will act in its individual capacity and not as an agent, employee, partner, joint venture, or associate of the other. An employee or agent of one Party shall not be deemed or construed to be the employee or agent of the other for any purpose whatsoever. The Contractor is advised that taxes or Social Security payments will not be withheld from any City payments issued hereunder and that the Contractor should make arrangements to directly pay such expenses, if any.

6.8 NON-WAIVER MONIES DUE: The City of Goodyear as a public entity supported by tax monies, in execution of its public trust, cannot agree to waive any lawful or legitimate right to recover monies lawfully due it. Therefore, Contractor agrees that it will not insist upon or demand any statement whereby the City agrees to limit in advance or waive any right the City might have to recover actual lawful damages in any court of law under applicable Arizona law.

6.9 AMBIGUITIES NOT HELD AGAINST DRAFTER: This Contract having been freely and voluntarily negotiated by all parties and the rule of contract construction that ambiguities, if any, in any term or condition of an agreement are held against the drafter of the agreement is not applicable to this Contract.

6.10 NON-WAIVER CONTRACT PROVISION: The failure of either Party to enforce any of the provisions of this Contract or to require performance of the other Party of any of the provisions hereof shall not be construed to be a waiver of such provisions, nor shall it affect the validity of this Contract or any part thereof, or the right of either Party to thereafter enforce each and every provision.

6.11 COOPERATION AND FURTHER DOCUMENTATION: The Contractor agrees to provide the City all duly executed documents as shall be reasonably requested by the City to implement the intent of this Contract.

SECTION 7. CONTRACT ADMINISTRATION AND OPERATION

7.1 WORK PRODUCT, EQUIPMENT AND MATERIALS: All work product, equipment, or materials created or purchased under this Contract are considered the sole property of the City and must be delivered to the City upon termination, abandonment of the Contract or final payment to the Contractor and shall not be used or released by the Contractor without prior authorization from the City. Work product includes, but is not limited to, plans, specifications, cost estimates, tracings, studies, design analyses, original Mylar drawings, computer aided drafting and design (CADD) file, computer disks and/or other electronic records and media. Contractor agrees that all materials prepared under this Contract are "works for hire" within the meaning of the copyright laws of the United States and assigns to City all rights and interest Contractor may have in the materials it prepares under this Contract, including any right to derivative use of the

materials. Contractor shall place the professional seal of Contractor on all plans and documents prepared in the performance of this Contract.

7.2 CONFIDENTIALITY AND ENCRYPTION: All data, regardless of form, including originals, images and reproductions, prepared by, obtained by, or transmitted to Contractor in connection with this Contract are confidential, proprietary information owned by the City. Except as specifically provided in this Contract, the Contractor shall not disclose data generated in the performance of the Service to any third person without the prior written consent of the City Manager.

Personal identifying information, financial account information or restricted City information, whether electronic format or hard copy, are considered confidential information and must be secured and protected at all times to avoid unauthorized access. At a minimum Contractor shall ensure that all electronic transmissions of confidential data are encrypted and any cryptographic algorithm implementations used must have been validated by the National Institute of Standards and Technology (NIST). The use of proprietary encryption algorithms will not be allowed for any purpose. The export of encryption technologies is restricted by the U.S. Government.

In the event that data collected or obtained by Contractor in connection with this Contract is believed to have been compromised, Contractor shall notify the City Attorney immediately. Contractor agrees to reimburse the City for any costs incurred by the City to investigate potential breaches of this data and, where applicable, the cost of notifying individuals who may be impacted by the breach.

Contractor agrees that the requirements of this section shall be incorporated into all subcontractor agreements entered into by the Contractor. It is further agreed that a violation of this section shall be deemed to cause irreparable harm and justifies injunctive relief in court. A violation of this section may result in immediate termination of this Contract without further notice. The obligations of Contractor under this section shall survive the termination of this Contract.

7.3 CONFLICT OF INTEREST/THIRD PARTIES: Contractor shall provide written notice to the City as set forth in this section, of any work or Services performed by the Contractor for third parties that, to the extent that the Contractor is aware, involves or is associated with any real property or personal property owned or leased by the City or which may be adverse to the City. Notice shall be given seven (7) days prior to commencement of the Services by the Contractor for a third party. Written notice and disclosure shall be sent to:

Roric Massey, City Attorney
City of Goodyear
190 N. Litchfield Rd
Goodyear, Arizona 85338

Actions that are considered to be adverse to the City include but are not limited to:

1. Using data acquired in connection with this Contract to assist a third party in pursuing administrative or judicial action against the City;
2. Testifying or providing evidence on behalf of any third party in connection with an administrative or judicial action against the City; and
3. Using data to produce income for the Contractor, its subcontractors or employees independently of performing the services under this Contract, without the prior written consent of the City.

The Contractor represents that except for those persons, entities and projects identified to the City, the Services to be performed by the Contractor under this Contract are not expected to create an interest with any person, entity, or third party project that is or may be adverse to the interests of the City. The Contractor's failure to provide a written notice and disclosure of the information as set forth in this section shall constitute a material breach of Contract.

7.4 CONFLICT AUDIT: Within thirty (30) days of being requested to do so, Contractor agrees to provide the City an itemized summary of any and all gifts a Contractor, its directors, officers, managers, employees, agents and/or representatives have made to any City employee during the year prior to the date of the Contract through the date of the request. The summary shall include the date the gift was made, a description of the gift, the City employee(s) that received the gift, and the value of the gift. The summary shall be signed and its truthfulness certified by Contractor. For purposes of this section the terms "Gift" means anything of value that is provided to the employee and includes, by way of example, but not limitation, meals, free use of vacation homes, low interest or no interest loans, tickets to sporting events, tickets to charitable events, entertainment expenses, travel expenses, drinks, and the like. The failure to comply with any request made pursuant to this section and/or the submission of a summary that contains material misrepresentations constitutes grounds for debarment and the refusal to allow Contractor to participate in any future contracts with the City.

7.5 AUDIT OF RECORDS: Contractor shall retain, and shall contractually require each and every subcontractor that performs any Work under this Contact to retain all books, accounts, reports, files and any and all other records relating to the contract (hereinafter referred to as "Contract Documents") for six (6) years after completion of the Contract. City, upon written request and at reasonable times, shall have the right to review, inspect, audit and copy all Contract Documents of the Contractor and any subcontractors. Contractor shall produce the original Contract Documents at City Hall, currently located at 190 N. Litchfield Road, Goodyear, Arizona, or at such other City facility within the City as designated by the City in writing. If approved by City Attorney in writing, photographs, microphotographs, or other authentic reproductions may be maintained instead of original Contract Documents.

7.6 AUDIT/BILLING AND EXPENSES: The City reserves the right to request supporting documentation for all hourly amounts, cost of goods and reimbursable expenses charged to the City. Such records will be subject to audit at any time during the term of this Contract and for a period not to exceed two (2) years after any amount is billed. Within thirty (30) days of receiving a request, the Contractor will furnish to the City original invoices to support all charges and complete payroll records to support such hourly labor charges. The City reserves the right to audit any other supporting evidence necessary to substantiate charges related to this Contract, both direct and indirect costs, including overhead allocations if they apply to hourly costs associated with this Contract. If requested by the City, the Contractor will provide supporting records electronically in addition to a hard copy.

If the audit reveals overcharge, the Contractor will reimburse the City upon demand for the amount of such overcharges plus interest thereon from the date paid by the City through the date of reimbursement. If the overcharges exceed 5% of Contractor's compensation, then Contractor shall also reimburse the City for the cost of the audit.

The Contractor shall include a similar provision in all of its agreements with subcontractor providing goods and/or services under this Contract to ensure the City, its authorized representative, and/or the appropriate federal agency, has access to the subcontractor records to verify the accuracy of any similar amounts charged to the City.

7.7 ADVERTISING: Contractor and all subcontractors shall not advertise or publish new releases concerning this Contract, goods or services provided to the City without prior written consent of the City Attorney.

7.8 CITY MARKS: The Contractor and all subcontractors shall not use any trade name, trademark, service mark, or logo of the City (or any name, mark or logo confusingly similar thereto) in any advertising, promotions, or otherwise, without the City's express prior written consent.

7.9 LICENSES AND PERMITS: Contractor and all subcontractors shall keep current federal, state, and local licenses and permits required for the operation of the business conducted by the Contractor as applicable to this contract.

7.10 E-VERIFY: Contractor and all subcontractors warrant compliance with the e-verify statute, A.R.S. § 23-214(A). A breach of this warranty shall be deemed a material breach of this contract, and shall subject this contract to penalties up to and including termination of the contract. The City retains the right to inspect the papers and records of any of Contractor's employees or any subcontractor employees working on the contract to ensure compliance with this requirement. For this section, Contractor shall have the meaning of Contractor as found in A.R.S. § 41-4401, and subcontractor has the same meaning as found in A.R.S. § 41-4401.

7.11 NON-DISCRIMINATION: Contractor and all subcontractors will not discriminate against any person on the basis of race, color, religion, age, gender, or national origin in the performance of this Contract, and shall comply with the terms and intent of Title VI of the Civil Rights Act of 1964, P.L. 88-354.

7.12 COMPLIANCE: The Contractor and all subcontractors understand and agree to comply with the Americans with Disabilities Act, the Immigration Reform and Control Act of 1986 and the Drug Free Workplace Act of 1989 as amended. The Contractor agrees to comply with these laws and Arizona Executive Order 2009-09 in performing this Contract and to permit the City to verify such compliance.

7.13 CONTINUATION DURING DISPUTES: Contractor agrees that notwithstanding the existence of any dispute between the parties, insofar as is possible, under the terms of the contract, the Contractor shall continue to perform the obligations required of the Contractor during the continuation of any such dispute unless enjoined or prohibited by the City or an Arizona Court of competent jurisdiction.

7.14 COOPERATIVE STATEMENT: This contract shall be for the use of the City of Goodyear. In addition, specific eligible specific political subdivisions and nonprofit educational or public health institutions may also participate at their discretion. Any eligible agency may elect to participate (piggyback) on this contract if the Contractor agrees to do so.

7.15 CAPTIONS: The captions used herein are for convenience only and are not a part of this Contract and do not in any way limit or amplify the terms and provisions hereof.

7.16 BANKRUPTCY: This Agreement, at the option of the City, shall be terminable in the case of bankruptcy, voluntary or involuntary, or insolvency of the Contractor.

SECTION 8. CONTRACT CHANGES

8.1 MODIFICATION: No supplement, modification, or amendment of any term of this Contract will be deemed binding or effective unless in writing and signed by the Parties with authority to do so. This section does not prohibit the City from unilaterally extending the contract term.

8.2 SUCCESSORS AND ASSIGNS: This Contract is binding on the parties' respective partners, successors, assigns, and legal representatives. Contractor will not assign, sublet, or transfer its right or interest in this Contract nor monies due, in whole or in part, or delegation any duty of Contractor without the prior written consent of the City. Any assignment or delegation made in violation of this section shall be void. In no event does this Contract create any contractual relationship between the City and any third party.

8.3 THIRD PARTY BENEFICIARY: Nothing under this Contract shall be construed to give any rights or benefits in the Contract to anyone other than the City and the Contractor, and all duties and responsibilities undertaken pursuant to this Contract will be for the sole and exclusive benefit of City and the Contractor, and not for the benefit of any other Party.

8.4 AUTHORIZED CHANGES: The City reserves the right at any time to make changes in any one or more of the following: (i) specifications; (ii) methods of shipment or packing; (iii) place of delivery; (iv) time of delivery; and/or (v) quantities. If the change causes an increase or decrease in the cost of or the time required for performance, an equitable adjustment may be made in the price or deliver schedule, or both. Any claim for adjustment shall be deemed waived unless asserted in writing within thirty (30) days from the receipt of the change. Prior increases or extensions of delivery time shall not be binding on the City unless evidenced in writing and approved by the City.

8.5 SUBCONTRACTS: No subcontract shall be entered into by the Contractor with any other party to furnish any of the goods, Service or Work specified herein without the advance written approval of the City.

8.6 CONTINGENT FEES: Contractor warrants that no person has been employed or retained to solicit or secure this Contract upon an agreement or understanding for a commission, percentage, brokerage, or contingent fee, and that no member of the City Council, or any employee of the City of Goodyear has any interest, financially, or otherwise, in the Contractor's business/firm. For breach or violation of this warranty, the City of Goodyear shall have the right to annul this Contract without liability, or at its discretion to deduct from the Contract price or consideration, the full amount of such commission, percentage, brokerage, or contingent fee.

8.7 LIENS: Contractor shall hold the City harmless from claimants supplying labor or materials to the contractor or subcontractors in the performance of the work required under this Contract.

SECTION 9. WARRANTY

9.1 GUARANTEE: Unless otherwise specified, all items shall be guaranteed for a minimum period of one (1) year from the date of acceptance by the City against defects in material and workmanship. At any time during that period, if a defect should occur in any item that item shall be replaced or repaired by the Contractor at no obligation to the City except where it is shown that the defect was caused solely by misuse of the City.

9.2 QUALITY: Contractor expressly warrants that all goods and services furnished under this Contract shall conform to the specifications, appropriate standards, and will be new and free from defects in material or workmanship. Contractor warrants that all such goods or services will conform to any statements made on the containers or labels or advertisements for such goods or services, and that any goods will be adequately contained, packaged, marked and labeled. Contractor warrants that all goods and services furnished hereunder will be merchantable, and will be safe and appropriate for the purpose which goods or services of that kind are normally used. If Contractor knows or has reason to now the particular purpose for which City intends to use the goods or services, Contractor warrants that goods and services furnished will conform in all respect to samples. Inspection, test, acceptance of use of the goods or services furnished hereunder shall not affect the Contractors obligation under this warranty, and such warranties shall survive inspection, test, acceptance and use. Contractor's warranty shall run to City, its successors and assigns.

9.3 RESPONSIBILITY FOR CORRECTION: Any defects of design, workmanship, or materials that would result in non-compliance with the contract specification shall be fully corrected by the Contractor (including parts, labor, shipping or freight) without cost to the City. This includes any necessary labor to remove, repair, install, or to ship or transport any item to a point of repair and return. It is agreed that the Contractor shall be fully responsible for making any correction, replacement, or modification necessary for specification or legal compliance. Contractor agrees that if the product or service offered does not comply with the foregoing, the City has the right to cancel the purchase at any time with full refund within 30 calendar days after notice of non-compliance and Contractor further agrees to be fully responsible for any consequential damages suffered by the City.

9.4 INVESTIGATION OF CONDITIONS: The Contractor warrants and agrees familiarity of the work that is required, is satisfied as to the conditions under which it is to perform and enters into this Contract based upon the Contractors own investigation.

9.5 WORKMANSHIP: Where not more specifically described in any of the various sections of the specifications, workmanship shall conform to all of the methods and operations of best standards and accepted practices of the trade or trades involved and shall include all items of fabrication, construction or installation regularly furnished or required for completion of the services or goods. All goods and services shall be provided and executed by personnel skilled in their respective lines of work. Contractor warrants that all goods and services delivered under this contract shall conform to the specifications of this contract Additional warranty requirements may be set forth in the Solicitation.

9.6 RIGHT TO INSPECT PLANT: The City may, at reasonable times, inspect the part of the plant or place of business of a Contractor or subcontractor which is related to the performance of any contract as awarded or to be awarded.

9.7 PREPARATION OF SPECIFICATIONS BY PERSONS OTHER THAN CITY PERSONNEL: All specifications shall seek to promote overall economy for the purposes intended and encourage competition and not be unduly restrictive in satisfying the City's needs. No person preparing specifications shall receive any direct or indirect benefit from the utilization of specifications, other than fees paid for the preparation of specifications.

9.8 SURVIVAL: Sections 6, 7, 8, 9, 10 and 11 will survive the completion, termination and/or abandonment of this Contract.

9.9 COMPLIANCE WITH APPLICABLE LAW: Contractor shall comply with all applicable federal, state and local laws, codes and regulations; including all applicable building regulations, license and permits requirements.

SECTION 10. CITY CONTRACTUAL RIGHTS

10.1 RIGHT OF ASSURANCE: Whenever the City in good faith has a reason to question the Contractor's intent or ability to perform, the City may demand that the Contractor give written assurance of the intent and ability to perform. In the event that a demand is made and no written assurance is given within five (5) work days, the City may treat this failure as an anticipatory repudiation of this contract.

10.2 NON-EXCLUSIVE REMEDIES: The rights and remedies of the City under this Contract are non-exclusive.

10.3 DEFAULT IN ONE INSTALLMENT TO CONSTITUTE BREACH: Each installment or lot of this Contract is dependent on every other installment or lot and a delivery of non-conforming goods or services or a default of any nature under one installment or lot will impair the value of the whole Contract and constitutes a breach of the Contract as a whole.

10.4 TIME IS OF THE ESSENCE: Time of each of the terms, covenants, and conditions of this Contract is hereby expressly made of the essence. The City is providing services which involve health, safety and welfare of the general public, delivery time is of the essence. Delivery must be made in accordance with the delivery schedule promised by the Contractor.

10.5 NON-EXCLUSIVE CONTRACT: The City reserves the right to purchase goods or services from another source only when necessary and determined appropriate by the City's Procurement Manager.

10.6 STRICT PERFORMANCE: Failure of either Party to insist upon the strict performance of any item or condition of the Contract or to exercise or delay the exercise of any right or remedy provided in the Contract, or by law, or the acceptance of materials or services, obligations imposed by this Contract or by law shall not be deemed a waiver of any right of either Party to insist upon the strict performance of the Contract.

10.7 CONFLICT OF INTEREST: This Contract is subject to the provisions of A.R.S. § 38-511 and may be canceled by the City, without penalty or further obligation, if any person significantly involved in initiating, negotiating, securing, drafting, or creating the Contract on behalf of the City is, or becomes, an employee, consultant, or agent of Contractor in any capacity with respect to the subject matter of the Contract while the Contract or any extension or amendment thereof, is in effect.

10.8 DEFAULT: In the case of default by the Contractor, the City may, by written notice, cancel this contract and repurchase from another source and may recover the excess costs by (i) deduction from an unpaid balance due; (ii) collection against the bid and/or performance bond, or (iii) a combination of the aforementioned remedies or other remedies as provided by law.

10.9 NOTICES: Unless otherwise provided herein, demands under this Contract will be in writing and will be deemed to have been duly given and received either (a) on the date of service if personally delivered to the Party to whom notice is to be given, or (b) on the third day after the date of the postmark of deposit by first class United States mail, registered or certified postage prepaid and properly addressed as follows:

To City:
Ray Diaz
City of Goodyear, Water Distribution Supervisor
190 N. Litchfield Road
Goodyear, AZ 85338

To Contractor:

Copy to:
Roric Massey
City of Goodyear, City Attorney
190 N. Litchfield Road
Goodyear, AZ 85338

10.10 This Contract shall be in full force and effect only when it has executed by duly authorized City officials and the duly authorized agent of the Contractor.

SECTION 11. CERTIFICATION

11.1 By signing on the offer and acceptance page, the individual certifies that they are authorized to sign on behalf of Contractor and further certifies that (a) No collusion or other anti-competitive practices were engaged in to arrive at the terms of this Contract, and that this Contract is subject to the provisions of A.R.S. Section 38-511; (b) The Contractor has not given, offered to give, nor intends to give at any time hereafter any economic opportunity, future employment, gift, loan, gratuity, special discount, trip favor, or service to a public servant in connection with this Contract. Failure to sign the offer, or signing it with a false statement, shall void the submitted offer or any resultant contract, and the Contractor may be debarred.

SECTION 12. LICENSING, DEBARMENT AND SUSPENSION

12.1 Licensing/Permits: Contractor warrants and certifies that Contractor and its Subcontractors will maintain valid licenses, registrations, permits, and other approvals necessary to perform the Services required under this Contract ("Approvals"). Contractor shall immediately advise the City in writing of any change in information provided by Contractor or its subcontractors as it relates to any Approvals. Noncompliance with this provision is a material breach of Contract.

12.2 Debarment/Suspension: Contractor warrants and certifies neither Contractor nor any of its subcontractor:

a. Are presently debarred, suspended, proposed for debarment, declared ineligible or otherwise legally excluded from contracting with any federal, state or local government entity; and
b. Have not been convicted of or had a civil judgment rendered against them for commission of fraud or a criminal offense in connection with obtaining, attempting to obtain or performing a public (federal, state or local) transaction or contract; violation of federal or state anti-trust statutes or commission of embezzlement, theft, forgery, bribery, falsification or destruction of records, making false statements or receiving stolen property within a three (3) year period preceding this Contract;
c. Are not, or have not been, indicted of or otherwise criminally charged by a governmental entity with the commission of fraud or a criminal offense in connection with obtaining, attempting to obtain or performing any public transaction or contract under a public transaction; violation of federal or state anti-trust statutes or commission of embezzlement, theft, forgery, bribery, falsification or destruction of records, making false statements or receiving stolen property, and
d. Have not had one or more public transaction (federal, state or local) terminated for cause or default.

12.3 City has no affirmative duty or obligation to confirm or deny the existence or issuance of any Approvals or Debarments, or to examine Contractor's contracting ability.

END OF STANDARD TERMS AND CONDITIONS

SECTION 1. TERM OF CONTRACT

1. The term of this Contract shall be one (1) year commencing on the effective date, which is the date last signed by both Parties, and may be extended or renewed for consecutive additional one (1) year periods, not to exceed a total of five (5) years, subject to appropriations and mutual agreement of the Parties. The City has no obligation to extend or renew this contract, and any decision to do so is at the sole discretion of the City.

SECTION 2 INSURANCE

2.1 Minimum Scope and Limits of Insurance. Contractors shall obtain and maintain in full force and effect during the life of this Contract, and any warranty period, all of the following minimum scope of insurance coverages with an insurance company duly licensed by the State of Arizona with a current A.M. Best Company, Inc rating of not less than A- or above and a category rating of not less than "VIII" with policies and forms satisfactory to the City. Use of alternative insurers requires prior written approval from City.

2.2 Commercial General Liability. Commercial General Liability insurance with a limit of not less than $1,000,000, per occurrence and $2,000,000 in the aggregate. The policy shall include coverage for premises-operations, products-completed operations, contractual liability, bodily injury, and property damage, but shall not be limited to the liability assumed under the indemnification provisions of this Contract. Coverage shall be at least as broad as Insurance Service Office policy form CG 00 01 07 98 or any replacement thereof, and shall be an occurrence-based policy. The Certificate of Insurance for the Commercial General Liability insurance policy shall expressly cover the indemnification obligations required by this Contract. These limits may be met through a combination of primary and excess liability coverage.

2.3 Automobile Liability. Commercial and Business Automobile Liability insurance for owned vehicles, hired, and non-owned vehicles, with a policy limit of not less than $1,000,000, combined single limits, per occurrence for bodily injury and property damage. Coverage shall be at least as broad as coverage Code 1 "any auto" under Insurance Service Office policy form CA 00 01 10 01 or any replacement thereof.

2.4 Workers' Compensation. Workers' Compensation as required by State and federal law statutes having jurisdiction over its employees engaged in the performance of any Services herein. Contractor agrees to waive, and to obtain endorsements from its workers' compensation insurer waiving subrogation rights under its workers' compensation insurance policy against the City, its officers, agents, employees, and volunteers arising from work performed by Contractor for the City and to require each of its subcontractors, if any, to do likewise under their workers' compensation insurance policies.

2.5 Umbrella/Excess Liability. Contractor and Subcontractor shall maintain Umbrella and Excess Liability insurance with an limit of not less than $2,000,000 per occurrence combined limit Bodily Injury and Property Damage, that "follows form" and applies in excess of the Commercial General Liability, Automobile Liability, and Employer's Liability, as required above. Primary per occurrence coverage may be used to fulfill this requirement.

2.6 Claim Reporting. Any failure to comply with the claim reporting provisions of the policies or any breach of a policy warranty shall not affect coverage afforded under the policy to protect the City.

2.7 Notice of Cancellation. Each certificate for each insurance policy required by the insurance provisions of this Contract shall provide the required coverage and shall not be suspended, voided, canceled, or reduced in

coverage by endorsement to limits lower than those required by this Contract, except after prior written consent from the City. Notice will be sent as required herein.

2.8 Additional Insureds. The Commercial General Liability and Business Automobile Liability policies shall contain or be endorsed to contain the following provision: "The City of Goodyear and its elected and appointed boards, officers, officials, agents, employees, and volunteers are additional insureds with respect to liability arising out of, or related to, activities performed by or on behalf of the Contractor pursuant to its contract with the City; products and completed operations of the Contractor; premises owned, occupied or used by the Contractor; automobiles owned, leased, hired, or borrowed by the Contractor."

2.8.1 Additional Insured – Goodyear Ballpark and Recreational Complex. Any Contracts addressing, or related to, the Goodyear Ballpark and Recreational Complex shall also identify the Cleveland Indians Baseball Company, and the Cincinnati Reds, LLC as additional insured and endorse the same.

2.9 Primacy of Coverage. Contractor's insurance shall apply separately to each insured against whom claim is made or suit is brought, except with respects to the limits of insurer's liability. Contractor's policy shall be primary and non-contributory.

2.10 Certificates of Insurance/Endorsements. Contractor shall provide City with Certificates of Insurance and proper additional insured endorsements as required by this Contract and as described above, in a form and content approved by City, prior to performing any services under this Contract. The Certificates of Insurance shall be attached hereto and incorporated hereby by this reference.

2.11 No Representation of Coverage Adequacy. The insurance requirements herein are *minimum requirements.* The City in no way warrants that the minimum requirements are sufficient to protect Contractor from liabilities that might arise out of the performance of the Work under this Contract by Contractor, and the Contractor is free to purchase additional insurance. Any insurance coverage carried by the City or its employees is excess coverage and not contributory coverage to that provided by the Contractor. The amount and type of insurance coverage requirements set forth herein shall in no way be construed as limiting the scope of the indemnification obligations under this Contract.

2.12 Non-Waiver. The City reserves the right to review any and all insurance policies and/or an endorsement required by this Contract, but has no obligation to do so. Failure to identify any insurance deficiency shall not relieve the Contractor from, nor be construed or deemed a waiver of its obligation to maintain the required insurance at all times during the performance of this Contract. Any failure of Contractor to comply with the reporting provisions of the policies shall not affect coverage provided to the City, its officers, officials, agents, employees and volunteers.

2.13 Notice of Cancellation. Each certificate for each insurance policy required by this Section shall provide the required coverage and shall not be suspended, voided, canceled, reduced in coverage by endorsement to limits lower than those required by this Contract except after prior written consent from the City.

2.14 Claim Reporting. Any failure to comply with the claim reporting provisions of the policies or any breach of a policy warranty shall not affect coverage afforded under the policy to protect the City.

2.15 Other Contractors or Vendors. Contractor shall ensure its subcontractors and any vendors that may be contracted with in connection with the Project procure and maintain insurance coverage as is appropriate for their particular contract and properly endorse the City as required in this Section 9.

END OF SPECIAL TERMS AND CONDITIONS

1. INTRODUCTION

1.1 It is the intent of the City of Goodyear ("City") to establish a term contract for the purchase of residential and commercial water meters, meter reading equipment and replacement parts on an "as needed, if needed" basis.

1.2 The resulting agreement shall provide for all materials in this contract. Unit pricing shall include the cost of freight and any other associated direct or indirect costs, except taxes.

1.3 The City reserves the right to make multiple awards or to award by individual line items, by group of line items, or to make an aggregate award, whichever is deemed most advantageous to the City.

1.4 The water meters listed herein are approved meters; no substitutions are authorized.

2. GENERAL SPECIFICATIONS

2.1 The City has a large installed base of water meters. Replacement meters and parts are needed on an "as needed, if needed" basis to maintain inventory.

2.2 The quantities referenced on the Fee Schedule, are the City's best estimates. Estimated quantities do not obligate the City to order more than the City's actual requirements and are subject to availability of appropriated funds.

2.3 Contractor shall provide a discount off of manufacturer's list price from current catalog or price book for the purchase of parts on an "as needed, if needed" basis.

2.4 Contractor shall provide current literature (specification sheet, etc.) describing each meter they propose including any manufacturer warranties, guarantees and exchange programs. Failure to comply with this requirement may result in rejection of bid.

2.5 The City may test meters received from the contracted supplier. The City reserves the right to return all meters delivered at the expense of the Contractor in the event the Contractors' inventory does not perform according to the documents set forth in this bid.

2.6 Meters may be ordered in quantities varying from one (1) through one hundred (100).

2.7 All meter deliveries must be sent to: 5424 S. 157th Avenue, Goodyear, AZ 85338.

3. TECHNICAL SPECIFICATIONS

3.1 Meter sizes shall be ¾" x ¾", 1", 1.5", 2", 4", 6", and 8".

3.2 All meters shall confirm to the latest revision of the AWWA standard C-700, C-800, NSF/ANSI Standard 61 Annex F & G and Federal law except as herein amended. Meters shall register reading in gallons.

3.3 The manufacturer's serial number shall also be imprinted on the outer case of all meters.

3.4 The manufacturer/model numbers have been pre-approved for this solicitation. No other models will be accepted:

3.4.1 Sensus Meters
iPearl series
accuStream series
OMNI series
SRII series
"W" Fire Hydrant series
accuMag series

3.4.2 Neptune
T-10 ED2 PD series
ET4 HP Tubine Series
EC3 TRUFLOW Compound Series
Neptune Fire Hydrant Meter Series

3.5 Registers

3.5.1 All registers shall read in gallons. Register lens shall be made of glass and shall resist breakage under normal working conditions. Registers shall have data logging capabilities. All registers shall contain a low flow leak detector indicator. Registers must be secured in an acceptable tamper-proof manner. The City will purchase one of two types of registers'. Direct Read register or Encoded register.

3.6 AMR Devices

3.6.1 The City may purchase encoded registers that successfully interface with the following end points and meter reading software:

3.6.1.1 Sensus:
520R Pit MXU with TouchCoupler, 1Port
520R Pit MXU with TouchCoupler, 2Port
520M Pit MXU with TouchCoupler, 1Port
520M Pit MXU with TouchCoupler, 2Port
AutoVu Software

AutoRead Software

3.6.1.2 Neptune:
R900i E-Coder register
N_Sight Software

3.7 Guarantees and Exchange Programs

3.7.1 Guarantees and exchange programs are a critical consideration in the overall cost of purchasing and operating a water meter. Contractor is requested to supply their current guarantees, parts list, and exchange programs for those products supplied. Guarantees and exchange programs must be part of the manufacturer's national policy and should not be unique to this bid. The following standards are the minimum acceptable by the City.

3.7.1.1 AWWA new meter standards for one-year. AWWA repaired meter standard for the following 14-years.

3.7.1.2 Guaranteed for one-year for materials and workmanship.

3.9 Training

3.9.1 Contractor shall provide hands-on training on meter repair and calibration within six-months of award.

END OF SCOPE OF WORK

Goodyear ARIZONA	**CITY OF GOODYEAR** **Fee Schedule**	Office of Procurement 190 N. Litchfield Road P.O. Box 5100 Goodyear, AZ 85338 Phone: 623-882-7845

Prices offered shall not include applicable state and local taxes. The City will pay all applicable taxes. **For the purposes of determining the lowest cost, the City will not take tax into consideration.**

Taxes must be listed as a separate item on all invoices. Applicable tax rate: 7.8% %

ITEM NO.	ESTIMATED QUANTITY	UNIT OF MEASURE	DESCRIPTION	UNIT PRICE	EXTENDED PRICE
GROUP A – Residential Water Meters					
A-1	500	Each	¾" SRII TR/PL, SHORT, 1000G, BrzBtm, BrzBnt, L/PL Manufacturer: Neptune Product No.: T-10 w/ Touch Coupler	$130.00	$65,000.00
A-2	300	Each	1" SRII TR/PL, BrzBtm, BrzBnt, L/PLS Manufacturer: Neptune Product No.: T-10 w/ Touch Coupler	$162.00	$48,600.00
A-3	500	Each	¾" SRII TR/PL, SHORT, 1000G, BrzBtm, BrzBnt, L/PL, EBII Manufacturer: Neptune Product No.: T-10 w/ Touch Coupler	$130.00	$65,000.00
A-4	300	Each	1" SRII TR/PL, BrzBtm, BrzBnt, L/PLS Manufacturer: Neptune Product No.: T-10 w/ Touch Coupler	$162.00	$48,600.00
A-5	500	Each	¾" iPERL TR/PL, SHORT, 1000G, L/PL Manufacturer: Neptune Product No.: T10 W/ Touch Coupler	$130.00	$65,000.00
A-6	300	Each	1" iPERL TR/PL, 1000G, L/PL Manufacturer: Neptune Product No.: T10 W/ Touch Couplers	$162.00	$48,600.00
A-7	500	Each	¾" accuSTREAM TR/PL, SHORT, 1000G, L/PL Manufacturer: Neptune Product No.: T10 W/ Touch Coupler	$130.00	$65,000.00
A-8	300	Each	1" accuSTREAM TR/PL, 1000G, L/PL Manufacturer: Neptune Product No.: T10 w/Touch Coupler	$162.00	$48,600.00

	CITY OF GOODYEAR	Office of Procurement 190 N. Litchfield Road P.O. Box 5100 Goodyear, AZ 85338 Phone: 623-882-7845
	Fee Schedule	

ITEM NO.	ESTIMATED QUANTITY	UNIT OF MEASURE	DESCRIPTION	UNIT PRICE	EXTENDED PRICE
A-9	50	Each	1 ½" OMNI R2 TR/PL, 1000G, L/PL Adpt Manufacturer: Neptune Product No.: T-10 Touch Coupler	$320.00	$16,000.00
A-10	50	Each	2" OMNI R2 TR/PL, 1000G, L/PL Adpt Manufacturer: Neptune Product No.: Touch Coupler T-10	$425.00	$21,250.00
A-11	50	Each	2" OMNI R2 TR/PL, 1000G, L/PL Adpt, 10" Lay Length Manufacturer: Neptune Product No.: T-10 w/ Touch Coupler	$425.00	$21,250.00
			SUBTOTAL GROUP A		$512,900.00
GROUP B – Turbine Water Meters with Strainers					
B-1	50	Each	1 ½" Omni T2, Intgrl Strainer, TR/PL, L/HSG, Pulse Output & Test Outlet Manufacturer: Neptune Product No.: HP Turbine Touch Coupler	$780.00	$39,000.00
B-2	50	Each	2" Omni T2, Intgrl Strainer, TR/PL, L/HSG, Pulse Output & Test Outlet Manufacturer: Neptune Product No.: HP Turbine Touch Coupler	$780.00	$39,000.00
B-3	10	Each	2" Omni T2, Intgrl Strainer, TR/PL, L/HSG, Pulse Output 10" Lay Length Manufacturer: Neptune Product No.: HP Turbine Touch Coupler	$780.00	$7,800.00
B-4	10	Each	3" Omni T2, Intgrl Strainer, TR/PL, L/HSG, Pulse Output & Test Outlet Manufacturer: Neptune Product No.: HP Turbine Touch Coupler	$1380.00	$13,800.00
B-5	10	Each	4" Omni T2, Intgrl Strainer, TR/PL, L/HSG, Pulse Output & Test Outlet Manufacturer: Neptune Product No.: HP Turbine Touch Coupler	$1965.00	$19,650.00

Goodyear ARIZONA	**CITY OF GOODYEAR** **Fee Schedule**	Office of Procurement 190 N. Litchfield Road P.O. Box 5100 Goodyear, AZ 85338 Phone: 623-882-7845

ITEM NO.	ESTIMATED QUANTITY	UNIT OF MEASURE	DESCRIPTION	UNIT PRICE	EXTENDED PRICE
B-6	10	Each	6" Omni T2, Intgrl Strainer, TR/PL, L/HSG, Pulse Output & Test Outlet Manufacturer: Neptune Product No.: HP Turbine Touch Coupler	$3440.00	$34,400.00
B-7	10	Each	8" Omni T2, Intgrl Strainer, TR/PL, L/HSG, Pulse Output & Test Outlet Manufacturer: Neptune Product No.: HP Turbine Touch Coupler	$5220.00	$52,200.00
			SUBTOTAL GROUP B		$ 205,850.00
GROUP C – Compound Water Meters with Strainer					
C-1	10	Each	2" Omni C2, Intgrl Strainer, TR/PL, L/HSG, Pulse Output & Test Outlet Manufacturer: Neptune Product No.: Tru/Flo w/ Touch Coupler	$1230.00	$12,300.00
C-2	10	Each	3" Omni C2, Intgrl Strainer, TR/PL, L/HSG, Pulse Output & Test Outlet Manufacturer: Neptune Product No.: Tru/Flo w/ Touch Coupler	$2240.00	$22,400.00
C-3	10	Each	4" Omni C2, Intgrl Strainer, TR/PL, L/HSG, Pulse Output & Test Outlet Manufacturer: Neptune Product No.: Tru/Flo w/ Touch Coupler	$2615.00	$26,150.00
C-4	10	Each	6" Omni C2, Intgrl Strainer, TR/PL, L/HSG, Pulse Output & Test Outlet Manufacturer: Neptune Product No.: Tru/Flo w/ Touch Coupler	$4445.00	$44,450.00
C-5	10	Each	8" Omni C2, Intgrl Strainer, TR/PL, L/HSG, Pulse Output & Test Outlet Manufacturer: Neptune Product No.: Tru/Flo w/ Touch Coupler	$6075.00	$60,750.00
C-6	1000	Each	520R PIT MXU, 1 PORT, TOUCHCOUPLER, INTERNAL Manufacturer: Neptune Product No.: R900	$100.00	$100,000.00

Goodyear ARIZONA	**CITY OF GOODYEAR** **Fee Schedule**	Office of Procurement 190 N. Litchfield Road P.O. Box 5100 Goodyear, AZ 85338 Phone: 623-882-7845

ITEM NO.	ESTIMATED QUANTITY	UNIT OF MEASURE	DESCRIPTION	UNIT PRICE	EXTENDED PRICE
C-7	100	Each	520R PIT MXU, 2 PORT, TOUCHCOUPLER, INTERNAL Manufacturer: Neptune Product No.: R900	$100.00	$10,000.00
C-8	10	Each	3" SENSUS 125W HYDRANT METER, WITH INTEGRAL Manufacturer: Neptune Product No.: FH Meter	$1020.00	$10,200.00
C-9	500	Each	T10 3/4 SL BRZ 302 R900I PIT Manufacturer: Product No.:		Removed per amendment 1
C-10	300	Each	T10 1 BRZ 302 R900I PIT USG Manufacturer: Product No.:		Removed per amendment 1
C-11	50	Each	T10 1-1/2 OVAL R900I PIT USG Manufacturer: Product No.:		Removed per amendment 1
C-12	50	Each	T10 2 OVAL R900I PIT USG MTR Manufacturer: Product No.:		Removed per amendment 1
			SUBTOTAL GROUP C		$286,250.00
GROUP D – Turbine Meters with Strainer					
D-1	50	Each	ET4HRWG1S619 1.5 HP TURB Manufacturer: Neptune Product No.: ET4H	$869.92	$43,496.00
D-2	50	Each	ET4ARWG1S619 2 HP TURB Manufacturer: Neptune Product No.: ET4A	$869.92	$43,496.00
D-3	10	Each	ET4BRWG1S619 3 HP TURB Manufacturer: Neptune Product No.: ET4B	$1500.15	$15,001.50

	CITY OF GOODYEAR	Office of Procurement 190 N. Litchfield Road P.O. Box 5100 Goodyear, AZ 85338 Phone: 623-882-7845
Goodyear ARIZONA	Fee Schedule	

ITEM NO.	ESTIMATED QUANTITY	UNIT OF MEASURE	DESCRIPTION	UNIT PRICE	EXTENDED PRICE
D-4	10	Each	ET4CRWG1S619 4 HP TURB Manufacturer: Neptune Product No.: ET4C	$2115.40	$21,154.00
D-5	10	Each	ET4DRWG1S619 6 HP TURB Manufacturer: Neptune Product No.: ET4D	$3634.80	$36,348.00
D-6	5	Each	ET4ERWG1S619 8 HP TURB Manufacturer: Neptune Product No.: ET4E	$5485.90	$27,429.50
			SUBTOTAL GROUP D		$ 186,925.00
GROUP E – Compound Water Meters with Strainer					
E-1	10	Each	EC3BRWG1 2 T/F MTR (INTERNAL STRAINER) Manufacturer: Neptune Product No.: EC2A	$1416.70	$14,167.00
E-2	10	Each	EC3BRWG1S619 3 T/F MTR Manufacturer: Neptune Product No.: EC3B	$2342.25	$23,422.50
E-3	10	Each	EC3CRWG1S619 4 T/F MTR Manufacturer: Neptune Product No.: EC3C	$3064.50	$30,645.00
E-4	10	Each	EC3DRWG1S619 6 T/F MTR Manufacturer: Neptune Product No.: EC3D	$4947.70	$49,477.00
E-5	10	Each	EC3ERWG1S619 6X8 T/F Manufacturer: Neptune Product No.: EC3E	$7221.45	$72,214.50
			SUBTOTAL GROUP E		$ 189,926.00

Goodyear ARIZONA	**CITY OF GOODYEAR** **Fee Schedule**	Office of Procurement 190 N. Litchfield Road P.O. Box 5100 Goodyear, AZ 85338 Phone: 623-882-7845

ITEM NO.	ESTIMATED QUANTITY	UNIT OF MEASURE	DESCRIPTION	UNIT PRICE	EXTENDED PRICE
GROUP F – FH Meters					
F-1	10	Each	NEP FIRE HYD MTR GOODYEAR RECLAIM Manufacturer: Neptune Product No.: ET2B	$1020.00	$10,200.00
F-2	10	Each	NEP FIRE HYD MTR GOODYEAR ENDS Manufacturer: Neptune Product No.: ET2B	$1020.00	$10,200.00
			SUBTOTAL GROUP F		$ 20,400.00

SUBTOTAL ITEMS A-F	Cost
Removed per amendment 1 and replaced.	
Subtotal of Group A	$
Subtotal of Group B	$
Subtotal of Group C	$
Subtotal of Group D	$
Subtotal of Group E	$
Subtotal of Group F	$
Total Cost of Group A-F	$

If contractor has current catalog or price book for replacement parts and accessories, Contractor shall provide a discount off of manufacturer's list price and submit the catalog or price book with offer.

Discount off of Manufacturer's List Price 25 %

The City reserves the right to accept or reject the optional items when deemed to be in the best interest of the City. Upon acceptance by the City, the optional items, the catalog or price book and the discount % shall become part of the agreement. No alterations, modifications or updates shall be allowed to the catalog or price book without prior approval by the City.

1. Delivery:
Bidder states that the item(s) will be delivered within 7 calendar days after receipt of order. This delivery schedule shall include any time for shipping.

SUPPLY WATERWORKS

Neptune Water Meters

E-Coder R900i

ITEM DESCRIPTION	Price
PD WATER METERS	
T10 3/4 SL BRZ 302 R900I PIT	$213.76
T10 1 BRZ 302 R900I PIT USG	$254.67
T10 1-1/2 OVAL R900I PIT USG	$376.85
T10 2 OVAL R900I PIT USG MTR	$499.70
TURBINE METERS W/STRAINER	
ET4HRWG1S619 1.5 HPTURB	$869.92
ET4ARWG1S619 2 HP TURB	$869.92
ET4BRWG1S619 3 HP TURB	$1,500.15
ET4CRWG1S619 4 HP TURB	$2,115.40
ET4DRWG1S619 6 HP TURB	$3,634.80
ET4ERWG1S619 8 HP TURB	$5,485.90
COMPOUND WATER METERS W/STRAINER	
EC3BRWG1 2 T/F MTR (INTERNAL STRAINER)	$1,416.70
EC3BRWG1S619 3 T/F MTR	$2,342.25
EC3CRWG1S619 4 T/F MTR	$3,064.50
EC3DRWG1S619 6 T/F MTR	$4,947.70
EC3ERWG1S619 6X8 T/F	$7,221.45
FH METERS	
NEP F.HYD MTR GOODYEAR RECLAIM	$1,020.00
NEP FIRE HYD MTR GOODYEAR ENDS	$1,020.00

Additional Pricing

Product	
MRX 920 Mobile Collector	$6,500.00
Trimble Nomad Complete 900B	$2,625.00
Trimble Nomad Complete 900LE	$4,125.00
Trimble Ranger Complete	$8,250.00
Bluetooth Belt Clip	$2,180.00
Training (3 day on site)	$2,000.00
R900 Pit Unit	$100.00
R900i Register (all sizes)	$157.50
Meter Installation 5/8 - 1" w Data transfer	$37.00
Meter testing (2" and larger)	$285.00
Labor per hour	$85.00
Discount off Neptune List price	25%

Goodyear ARIZONA	**Solicitation Amendment No. 1**	Office of Procurement 190 N. Litchfield Road P.O. Box 5100 Goodyear, AZ 85338 Phone: 623-882-7845
	Solicitation No. 16-3378 **Solicitation Due Date:** October 8, 2015 **Time:** 3:00 pm	

Water Meters

Solicitation Amendment No. 1 is hereby issued based on questioned received:

1. Question: Page 3, section 1, item I: The City is requesting a CD-ROM with a copy of the proposal. Would it be possible to substitute a USB thumb drive?
   Response: Yes. A USB drive is acceptable.

2. Question: Page 4, section 5: DESCRIPTIVE LITERATURE: Will the City accept this in electronic format such as a USB thumb drive?
   Response: Yes.

3. Question: Page 31, items C-9 through C-12: Items C9-C12 are Neptune positive displacement water meters but they are included in Group C – Compound Meters with Strainer [Sensus]. Should these items be in their own group?
   Response: Yes. Remove Items C-9 through C-12 from Group C.

4. Question: Would it be possible to provide a copy of the pricing of the current contract of the Sensus items.
   Response: Request for incumbent pricing is available via public records request. http://goodyearaz.gov/government/departments-divisions-a-z/city-clerk-s-office/public-records-request

Clarification: Adding Group G to include items mentioned above in question 3.

ADD: Fee Schedule, Group G – Neptune PD, and Fee Schedule, Subtotal Page. All other pages in the Fee Schedule remain as written.

No other terms, conditions, or performance standards written or implied are changed.

Procurement Specialist: Victoria Jackson, CPPB

City of Goodyear	Approved as to form
By: 9/23/15	By: Rosie S. Wahl for
Jacque Behrens, CPPB	Roric Massey, City Attorney

Acknowledgement by Contractor

Contractor hereby acknowledges receipt and understanding of the above amendment. Contractor shall sign and return with their submittal.

Contractor Signature: Date: 09/29/15

Goodyear ARIZONA	**Solicitation Amendment No. 1** **Solicitation No. 16-3378** **Solicitation Due Date:** October 8, 2015 **Time:** 3:00 pm	Office of Procurement 190 N. Litchfield Road P.O. Box 5100 Goodyear, AZ 85338 Phone: 623-882-7845

ITEM NO.	ESTIMATED QUANTITY	UNIT OF MEASURE	DESCRIPTION	UNIT PRICE	EXTENDED PRICE
GROUP G Neptune PD					
G-1	500	Each	T10 3/4 SL BRZ 302 R900I PIT Manufacturer: Neptune Product No.: ED2D	$213.76	$106,880.00
G-2	300	Each	T10 1 BRZ 302 R900I PIT USG Manufacturer: Neptune Product No.: ED2F	$254.67	$76,401.00
G-3	50	Each	T10 1-1/2 OVAL R900I PIT USG Manufacturer: Neptune Product No.: ED2H	$376.65	$18,832.50
G-4	50	Each	T10 2 OVAL R900I PIT USG MTR Manufacturer: Neptune Product No.: ED2J	$499.70	$24,985.00
			SUBTOTAL GROUP G		$ 227,098.50

Goodyear ARIZONA	**Solicitation Amendment No. 1**	Office of Procurement 190 N. Litchfield Road P.O. Box 5100 Goodyear, AZ 85338 Phone: 623-882-7845
	Solicitation No. 16-3378 **Solicitation Due Date:** October 8, 2015 **Time:** 3:00 pm	

SUBTOTAL ITEMS A-F	Cost
Subtotal of Group A	$ 512,900.00
Subtotal of Group B	$ 205,850.00
Subtotal of Group C	$ 286,250.00
Subtotal of Group D	$ 186,925.00
Subtotal of Group E	$ 189,926.00
Subtotal of Group F	$20,400.00
Subtotal of Group G	$ 227,098.00
Total Cost of Group A-G	$ 1,629,349.00

If contractor has current catalog or price book for replacement parts and accessories, Contractor shall provide a discount off of manufacturer's list price and submit the catalog or price book with offer.

Discount off of Manufacturer's List Price 25 %

The City reserves the right to accept or reject the optional items when deemed to be in the best interest of the City. Upon acceptance by the City, the optional items, the catalog or price book and the discount % shall become part of the agreement. No alterations, modifications or updates shall be allowed to the catalog or price book without prior approval by the City.

1. **Delivery:**
Bidder states that the item(s) will be delivered within 7 calendar days after receipt of order. This delivery schedule shall include any time for shipping.

ARB® UTILITY MANAGEMENT SYSTEMS™

NEPTUNE TECHNOLOGY GROUP

R900® BELT CLIP TRANSCEIVER

AUTOMATE MEASUREMENT TO ACTIVATE OPERATIONAL EFFICIENCY

Neptune's R900® System was designed to streamline and automate processes for your water utility, regardless of the meter reading method you choose – walk-by, mobile, or fixed network. As part of this system, our R900® Belt Clip Transceiver (R900 BCT) can help your personnel be more efficient in their jobs. The R900 BCT's two-way communications to the R900® MIU eliminate meter access issues and speed up retrieval of valuable data logging information – up to 96 days of historical hourly consumption data from an individual account. In addition, its exceptional radio frequency (RF) throughput reduces meter reading time, especially in high-density environments. Field personnel can even read R900s while performing maintenance or other tasks when taking advantage of the R900 BCT's unattended operations mode. These automated features ensure you collect accurate data that can be turned into meaningful information – to help improve accuracy, identify hidden causes of loss, and optimize the efficiency of your operations.

MOVE AHEAD WITH BACKWARD COMPATIBILITY AND FORWARD INNOVATION

The R900 BCT, as with the rest of Neptune's R900 System, works with past generations of equipment while remaining flexible to incorporate innovations as needed. The R900 BCT maintains support to read previous generations of R900 MIUs yet introduces powerful software-defined radio (SDR) technology to support the new advanced two-way features of the R900 System. Phase in new features and equipment at your own pace, confident in the knowledge that Neptune will support your future needs without leaving you with stranded assets.

PRESENT CONSUMPTION DATA IN THE FIELD FOR PROACTIVE CUSTOMER SERVICE

Simplified access to critical information means your utility can provide even more proactive customer service. Pairing the R900 BCT with a handheld device or a personal Android device running Neptune's NGO™ app, your personnel can maximize their efficiency in the field, with the flexibility to perform impromptu service calls and address customer service issues on-site without a separate truck roll. With the data literally in hand, they can share data logging graph information with homeowners. This on-the-spot, on-site presentment of how much water they used and when, helps head off customer complaints regarding high water bills, reduce delinquencies, and avoid write-offs.

KEY BENEFITS

- Increases meter reading efficiency
  - Increased RF throughput capabilities which reduce reading time in high-density R900 environments
  - Two-way communications to R900 MIU which reduces time required to retrieve data logging information
  - Unattended operations mode allows utility personnel to read R900s while performing other non-meter-reading-related job functions
- No stranded assets
  - Compatible with all generations of R900 MIUs
  - Probe compatibility with Advantage and Pocket ProReader
  - Connects via bluetooth to CE5320B, Trimble Nomad, and Trimble Ranger 3
  - Software-defined radio technology enables the R900 BCT to be updated for compatibility with future products
- Analyze data at the source with Android phone or tablet via NGO app
  - Test-read R900s in the field or before installation to obtain reading and E-Coder® flag events
  - Retrieve 96 days of hourly interval data logging information
  - View graph of data logging intervals in the field
  - Share data logging graph information with homeowner to address high bill complaints

SPECIFICATIONS

- Communication: Bluetooth 2.1 and USB
- Handheld Software Compatibility: N_SIGHT™ version 4.6 or later (N_SIGHT version 5.0 or later is required for new two-way features of the R900 System)
- Handheld Compatibility: Trimble Nomad 900B, Trimble Nomad 900LE, Trimble Ranger 3, and DAP CE5320B

MODE OVERVIEW

	Normal	Unattended Operations	USB Mass Storage
Bluetooth Pairing to Handheld	Required	No	No. Used only for firmware updates and transfer of data via USB from SD card to N_SIGHT™ R900® host PC
Trimble Nomad 900B and 900LE Compatible	Yes	No	
DAP CE5320B Compatible	Yes	No	
Android App Compatible	Yes*	No	
R900 Compatible	Yes	Yes	
Advantage / Pocket ProReader Compatible	Yes	No	
Data Logging Compatible	Yes	No	
SD Card Data Storage	Yes	Yes	

**Advantage/Pocket ProReader and data logging not supported in Android NGO™ app.*

Bluetooth, RF Status, Mode, and Battery LEDs

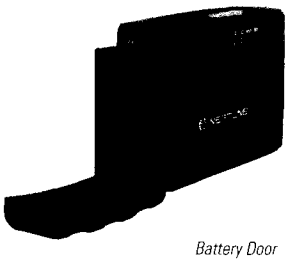

Battery Door

Power, Mode, and Enter Button

SD Card and USB Port Door

SPECIFICATIONS

- Memory: 4GB SD card
- Indicators: Four LEDs identify Bluetooth communication, RF status, mode status, and battery status
- Power Supply
  - Rechargeable lithium ion battery pack — 5000 mAh capacity
  - Field replaceable
- Dimensions
  - Height: 3.58" (9.1 cm)
  - Width: 1.66" (4.22 cm)
  - Length: 5.75" (14.6 cm)
- Weight: 1.1 lbs. (499g) including rechargeable battery
- Temperature Range
  - Operating: -4°F to +122°F (-20°C to +50°C)
  - Storage: -40°F to +185°F (-40°C to +85°C)
- Environmental: Tested to MIL-STD-810F and IP67
- Receiver Channels: 50
- Number of Simultaneous Channels: 8
- Approvals
  - FCC Class B
  - IC
- Accessories
  - Spare battery
  - Spare battery charger
  - Belt clip
  - SD card
  - 12V USB vehicle power cable
- Warranty
  - One-year comprehensive warranty
  - Hardware maintenance contracts available

Neptune Technology Group Inc.
1600 Alabama Highway 229
Tallassee, AL 36078
USA
Tel: (800) 633-8754
Fax: (334) 283-7293

Neptune Technology Group (Canada) Ltd.
7275 West Credit Avenue
Mississauga, Ontario
L5N 5M9
Canada
Tel: (905) 858-4211
Fax: (905) 858-0428

Neptune Technology Group Inc.
Avenida Ejercito Nacional No 418
Piso 12, Despacho 1203
Colonia Polanco V Sección
C.P. 11560
Delegación, Miguel Hidalgo
Mexico D.F.
Tel: (525) 5203-4032 / (525) 5203-6204
(525) 5203-5294
Fax: (525) 5203-6503

NEPTUNE TECHNOLOGY GROUP
neptunetg.com

Neptune engages in ongoing research and development to improve and enhance its products. Therefore, Neptune reserves the right to change product or system specifications without notice.

 © Copyright 2014, Neptune Technology Group Inc. Neptune is a registered trademark of Neptune Technology Group Inc.

ARB® UTILITY MANAGEMENT SYSTEMS™

Fire Hydrant Parts List

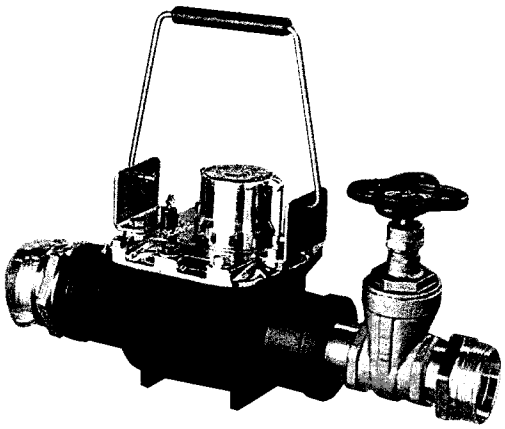

FIRE HYDRANT PARTS LIST

ITEM	DESCRIPTION	PART NUMBER	QUANTITY
1	16" Seal Wire with Lead Seal	41110-501	1
2	Seal Cap	11098-001	1
3	Calibration Nut	8545-417	1
4	Maincase Bolts	8329-405	10
5	Cover	9639-104	1
6	Drive Spindle Assembly	9485-001	1
7	Calibration Vane Assembly	11097-200	1
8	Drive Sleeve	9484-006	1
9	Compression Spring	N/A	N/A
10	Measuring Chamber Assembly	9439-001SP00	1
11	Washer	8568-012	4
12	Bolts	8329-007	4
13	Maincase Gasket	8341-304	1
*14	Gasket	8340-029	1
15	Fire Hose Coupling Assembly	9631-002	1
16	Maincase	9630-002	1
17	Bracket/Handle Assembly	12163-000	1
18	Nipple	8314-701	1
19	Gate Valve	8368-011	1
20	Outlet Nipple	N/A	1
21	Cover Assembly	9482-003	1

*Item #14 is included in assembly.

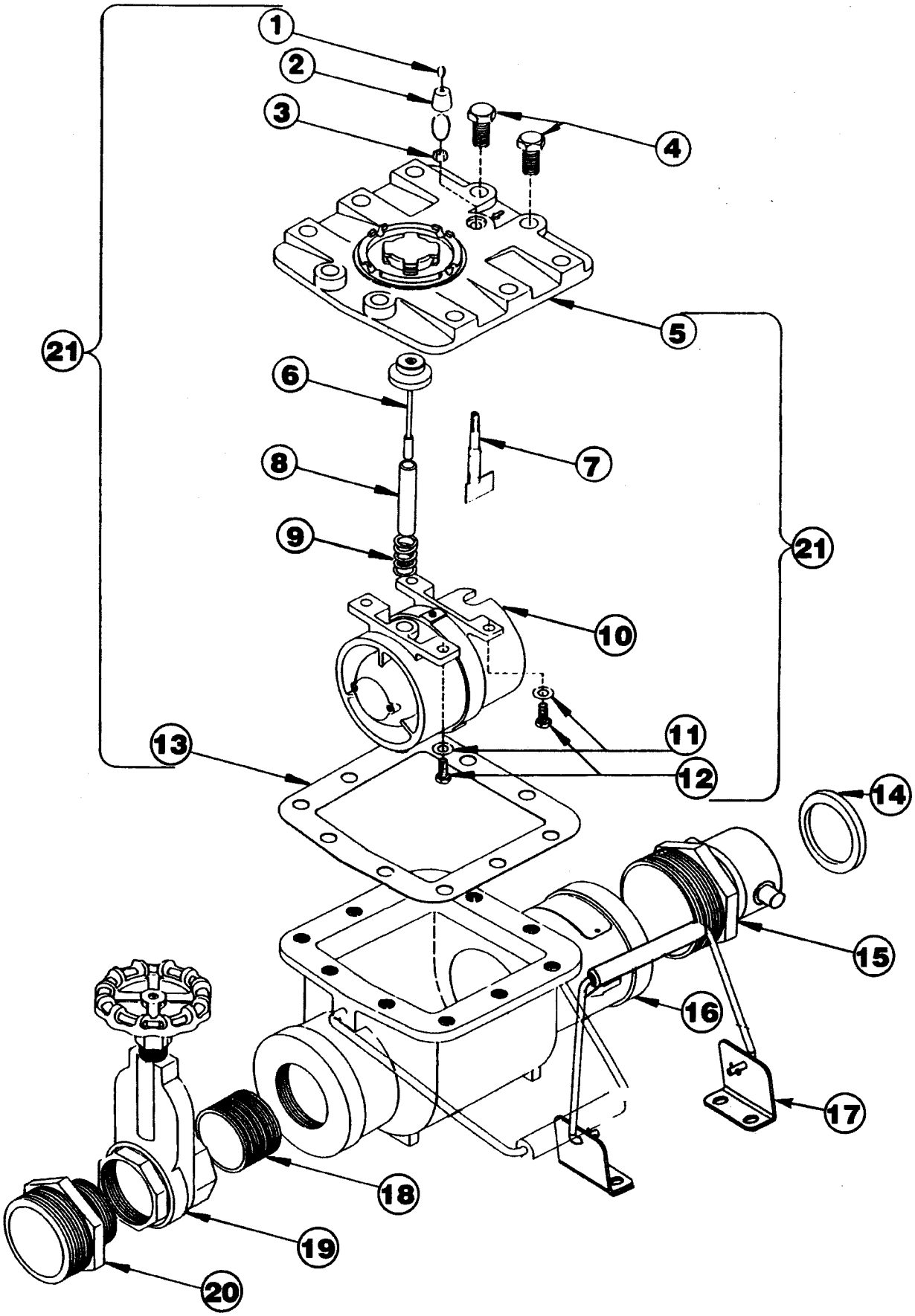
1
2
3
4
5
6
7
8
9
10
11
12
13
14
15
16
17
18
19
20
21
21

(Kit Includes: Register, Gasket, Cover, and Rotor Assembly)

REGISTRATION	KIT NUMBER	REGISTER COMPLETE*	ROLL-SEALED REGISTER ASSEMBLY
10 cu. ft.	9600-101	R83F8	9107-422
100 U.S. gal.	9600-201	R83G8	9107-421
1 M^3	9600-501	R83M8	9107-423

*When ordering registers, you must include change gear combination or four-digit register code on dial face.

Neptune engages in ongoing research and development to improve and enhance its products. Therefore, Neptune reserves the right to change product or system specifications without notice.

Neptune Technology Group Inc.
1600 Alabama Highway 229
Tallassee, AL 36078
USA
Tel: (800) 645-1892
Fax: (334) 283-7293

Neptune Technology Group (Canada) Ltd.
7275 West Credit Avenue
Mississauga, Ontario
L5N 5M9
Canada
Tel: (905) 858-4211
Fax: (905) 858-0428

Neptune Technology Group Inc.
Ejército Nacional No. 418
Piso 12, Desp. 1201-1202
Col. Chapultepec Morales
Delegación Miguel Hidalgo
11570 México, Distrito Federal
Tel: (525) 55203 5294 / (525) 55203 5708
Fax: (525) 55203 6503

NEPTUNE TECHNOLOGY GROUP
neptunetg.com

PL FH 03.10 © Copyright 2010, Neptune Technology Group Inc. Neptune is a registered trademark of Neptune Technology Group Inc.

ARB® UTILITY MANAGEMENT SYSTEMS™

NEPTUNE
TECHNOLOGY GROUP

FIRE HYDRANT METER

Size: 3"

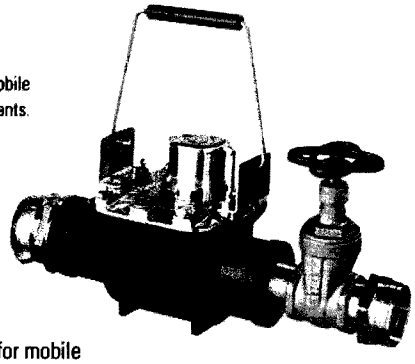

The Fire Hydrant water meter is designed for mobile use in metering flows from fire hydrants.

The Fire Hydrant water meter is designed for mobile use in metering flows from fire hydrants. The meter measures a wide flow range to maximize revenue. It meets or exceeds the latest performance requirements of AWWA. Maximum flow rates may be exceeded by 25% for intermittent flows.

CONSTRUCTION

The Fire Hydrant water meter consists of a lightweight, aluminum maincase fitted with a 2" gate valve, a turbine measuring element, and a roll-sealed register.

The aluminum maincase is Ryton® coated for corrosion resistance and is lightweight, compact, and easy to handle. This meter features a unique "balanced handle" which makes carrying and installing it easier than any other fire hydrant meter on the market. A 2" gate valve enables the user to regulate the water flow without opening and closing the fire hydrant.

The Unitized Measuring Element (UME) allows for quick and easy interchangeability. Exclusive dual graphite bearings provide equalized rotor loading for accuracy over a broad flow range. The thrust-compensated rotor configuration relieves pressure on the thrust bearings which minimizes wear and provides sustained accuracy over an extended operating life. A tamper-resistant, stainless steel calibration vane allows recalibration of the UME to lengthen service life and to ensure accurate registration.

The roll-sealed register eliminates leaking and fogging. Magnetic drive couples the register with the measuring element.

WARRANTY

Neptune provides a limited warranty with respect to its Fire Hydrant Meters for performance, materials and workmanship.

When desired, owner maintenance is easily accomplished by replacement of major components or a factory-calibrated UME.

KEY FEATURES

- Roll-Sealed Register
  - Permanently sealed, magnetic drive register assembly eliminates leaking and fogging
  - Locking register lid secures during transportation, protecting register lens
  - Glass lens ensures readability and scratch resistance
  - Tamperproof design prevents vandalism and allows in-service replacement of register
- Cast Aluminum Maincase
  - Ryton coating ensures maximum corrosion resistance
  - Lightweight material ensures easy handling
  - Single, balanced carrying handle provides for easy, one-person installation
  - 2" gate valve allows safe pressurization of measuring element and regulation of water flow
- Turbine Measuring Element
  - Wide flow ranges at 98.5%-101.5% accuracy ensure maximized revenues
  - Direct coupling of rotor to gear train ensures accurate registration
  - UME makes maintenance easier and faster
  - Stainless steel calibration vane ensures accurate registration and makes calibration easier

OPERATING CHARACTERISTICS

Meter Size	Normal Operating Range @100% Accuracy (±1.5%)	AWWA Standard	Low Flow @ 95% Accuracy
3"	5 to 450 US gpm 1.14 to 102.2 m³/h	560 US gpm 127.2 m³/h	8 to 350 US gpm 1.8 to 79.5 m³/h

DIMENSIONS

3" Fire Hydrant	A inches	B inches	C inches	D inches	E inches	Weight lbs
Less Coupling	15 1/2"	7 1/2	11 1/2	2 7/8	7 1/2	23
With Coupling	19 1/4"	10	11 1/2	2 7/8	7 1/2	29

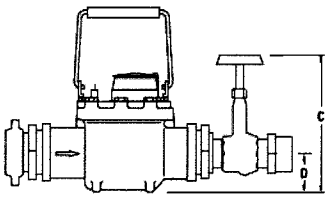

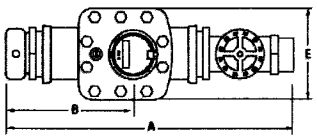

ACCURACY CHART

(Rate of Flow in Gallons per Minute)

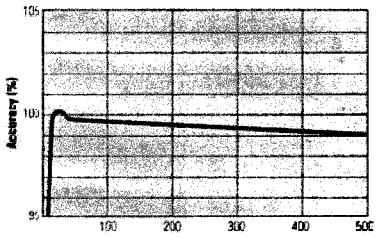

PRESSURE LOSS CHART

(Rate of Flow in Gallons per Minute)

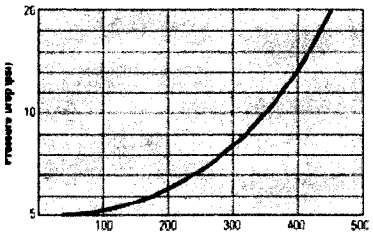

These charts show typical meter performance. Individual results may vary.

SPECIFICATIONS

- Application: cold water measurement of flow in one direction
- Maximum operating pressure: 150 psi
- Normal operation range: 5-450 gpm (at accuracy of 100 ± 1.5%)
- Register type:
  - Direct reading, center sweep, roll-sealed magnetic drive with low-flow indicator
  - Bronze box with locking cover
- Strainer: plastic
- Registration:
  - Per sweep hand revolution: 100 gallons, 10 cubic feet, 1 cubic metre
- Register capacity (six-wheel odometer):
  - 100,000,000 gallons,
  - 10,000,000 cubic feet,
  - 1,000,000 cubic metres
- Measuring element: AWWA Class II Turbine

OPTIONS

- Size: 2 1/2" outlet (with 2 1/2" gate valve)
- Check valve
- Strainer: stainless steel (internal)
- Orifice plate: sized for application
- Units of measure: U.S. gallons, cubic feet, cubic metres
- Connections:
  - Less coupling: 3" x 2" NPT
  - With coupling: 2" NH

Neptune engages in ongoing research and development to improve and enhance its products. Therefore, Neptune reserves the right to change product or system specifications without notice.

Neptune Technology Group Inc.
1600 Alabama Highway 229
Tallassee, AL 36078
USA
Tel: (800) 645-1892
Fax: (334) 283-7299

Neptune Technology Group (Canada) Ltd.
7275 West Credit Avenue
Mississauga, Ontario
L5N 5M9
Canada
Tel: (905) 858-4211
Fax: (905) 858-0428

Neptune Technology Group Inc.
Ejército Nacional No. 418
Piso 12, Desp. 1201-1202
Col. Chapultepec Morales
Delegación Miguel Hidalgo
11570 México, Distrito Federal
Tel: (525) 55203 5294 / (525) 55203 5708
Fax: (525) 55203 6503

NEPTUNE TECHNOLOGY GROUP

neptunetg.com

PS FH 04.06 © Copyright 2006, Neptune Technology Group Inc. Neptune is a registered trademark of Neptune Technology Group Inc.

ARB® UTILITY MANAGEMENT SYSTEMS™

NEPTUNE
TECHNOLOGY GROUP

HIGH PERFORMANCE TURBINE METER

SIZES: 1-1/2", 2", 3", 4", 6", 8", and 10"

High Performance Turbine water meters offer some of the widest flow ranges of any turbine meters on the market.

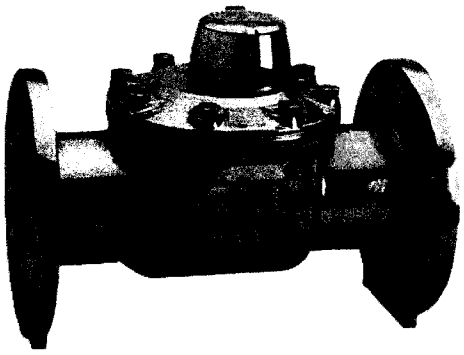

HP Turbine water meters offer some of the widest flow ranges of any turbine meters on the market. All HP Turbine water meters meet or exceed the latest performance and accuracy requirements of AWWA C701 and maximum continuous flow rates may be exceeded by as much as 25% for intermittent periods.

CONSTRUCTION

Each HP Turbine consists of a rugged no-lead high copper alloy maincase, an AWWA Class II turbine measuring element, and a roll-sealed register.

The maincase is corrosion resistant, lightweight, and compact. Inlet and outlet connections are flanged. Strainers are available to prevent debris from entering the meter and to reduce the effects of uneven water flow due to upstream piping variations.

The Unitized Measuring Element (UME) allows for quick, easy, in-line interchangeability. Water volume is measured accurately at all flows by a specially designed assembly. The hydrodynamically balanced thrust compensated rotor relieves pressure on the thrust bearings to minimize wear and provide sustained accuracy over an extended operating life. Direct coupling of the rotor to the gear train eliminates revenue loss due to slippage during fast starts and line surges. A calibration vane allows in-field calibration of the UME to lengthen service life and to ensure accurate registration.

The roll-sealed register eliminates leaking and fogging. A magnetic drive couples the register with the measuring element.

APPLICATION

The HP Turbine water meter is designed for applications where flow rates are consistently moderate to high.

SYSTEMS COMPATIBILITY

Adaptability to all present and future systems for flexibility.

KEY FEATURES

- Roll-Sealed Register
  - Magnetic drive, low torque registration ensures accuracy
  - Impact-resistant register design with flat glass for readability
  - 1:1 ratio, low flow indicator identifies leaks
  - Bayonet mount allows in-line serviceability
  - Tamperproof seal pin deters theft
  - Date of manufacture, size, and model stamped on dial face
- No-Lead Maincase
  - Made from no-lead high copper alloy
  - ANSI/NSF 61 certified
  - Compact design is lightweight and easy to handle
  - Sturdy, durable, corrosion resistant
  - Resists internal pressure stresses and external damage
  - Residual value
- Turbine Measuring Element
  - Excellent low flow sensitivity and wide flow ranges available at 98.5%–101.5% accuracy
  - Direct coupling of rotor to gear train prevents slippage and ensures accurate registration
  - Interchangeable measuring element allows for in-line service
  - Hydrodynamically balanced rotor
  - Reusable O-ring gasket on 3" –10" sizes

WARRANTY

Neptune provides a limited warranty with respect to its HP Turbine water meters for performance, materials, and workmanship.

When desired, owner maintenance is easily accomplished by in-line replacement of major components.

1-1/2" ACCURACY

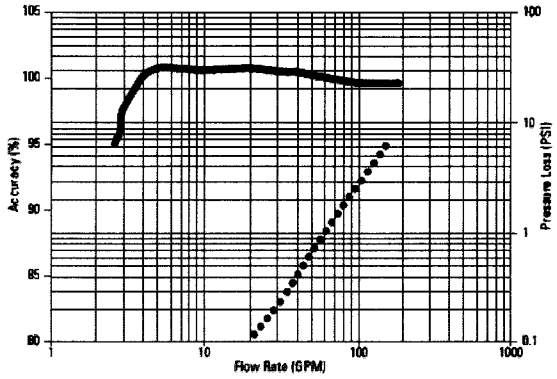

2" ACCURACY

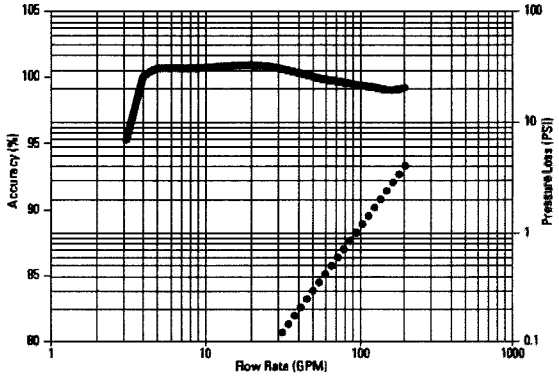

3" ACCURACY

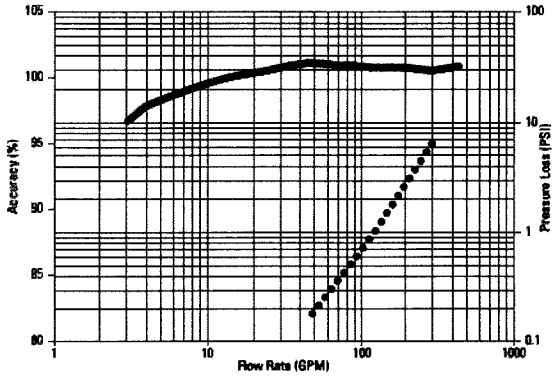

4" ACCURACY

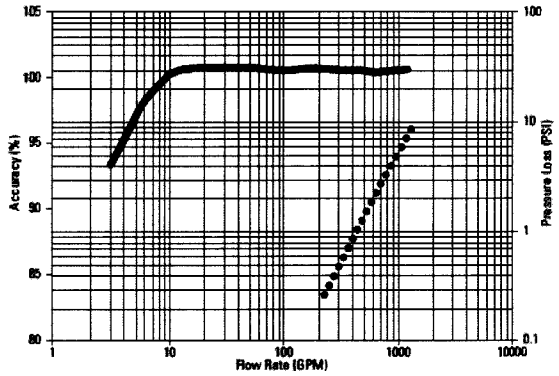

6" ACCURACY

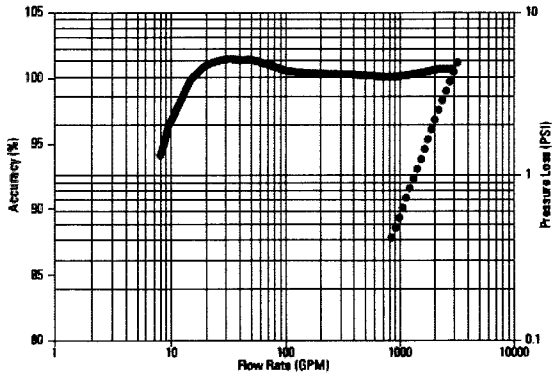

8" ACCURACY

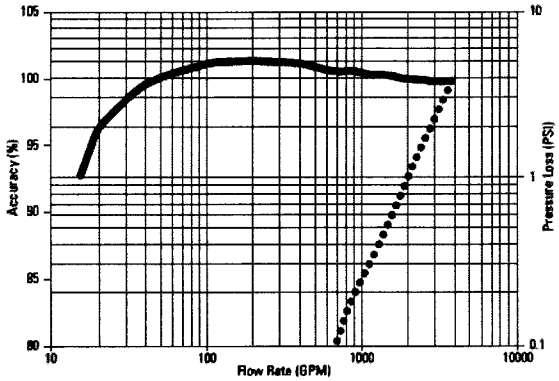

10" ACCURACY

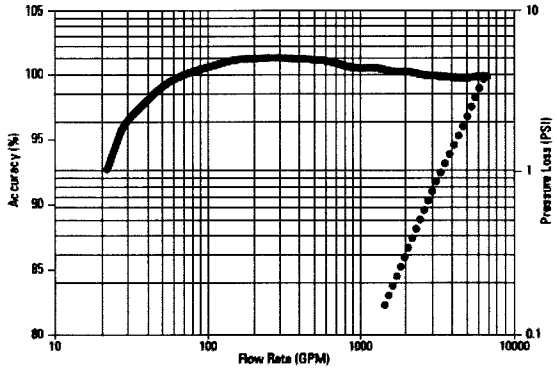

Accuracy

Head Loss

These charts show typical meter performance. Individual results may vary.

OPERATING CHARACTERISTICS

Meter Size	Normal Operating Range @100% Accuracy (±1.5%)	Maximum Intermittent Flow	AWWA Standard
1 1/2"	4 to 160 US gpm 0.91 to 36.3 m³/h	200 US gpm 45.4 m³/h	N/A
2"	4 to 200 US gpm 0.91 to 45.4 m³/h	250 US gpm 56.8 m³/h	4 to 160 US gpm 0.91 to 36.3 m³/h
3"	5 to 450 US gpm 1.14 to 102.2 m³/h	560 US gpm 127.2 m³/h	8 to 350 US gpm 1.8 to 79.5 m³/h
4"	10 to 1200 US gpm 2.27 to 272.5 m³/h	1500 US gpm 340.7 m³/h	15 to 630 US gpm 3.4 to 143.0 m³/h
6"	20 to 2500 US gpm 4.55 to 567.8 m³/h	3100 US gpm 704.1 m³/h	30 to 1400 US gpm 6.8 to 317.9 m³/h
8"	35 to 4000 US gpm 7.95 to 908.5 m³/h	5000 US gpm 1135.6 m³/h	50 to 2400 US gpm 11.4 to 545 m³/h
10"	50 to 6500 US gpm 11.36 to 1476.3 m³/h	8000 US gpm 1817 m³/h	75 to 3800 US gpm 17.0 to 863 m³/h

DIMENSIONS

Meter Size	A in/mm	B in/mm	C in/mm	D in/mm	E in/mm	F in/mm	G in/mm	Weight lbs/kg
1 1/2"	10 (254)	6 1/2 (165)	7 1/8 (181)	1 3/4 (44)	3/4 (19)	4 1/2 (114)	5 3/8 (137)	19 (8.6)
2"	10 (254)	6 1/2 (165)	7 5/8 (194)	2 1/8 (54)	13/16 (21)	4 1/2 (114)	5 3/8 (137)	20 (9.1)
3"	12 (305)	6 (152)	10 (254)	3 3/4 (95)	5/8 (16)	6 1/4 (159)	7 1/2 (191)	40 (18.1)
4"	14 (356)	6 1/2 (165)	10 7/8 (276)	4 1/2 (114)	3/4 (19)	8 1/8 (206)	9 (229)	52 (23.6)
6"	18 (457)	8 5/8 (219)	13 (330)	5 1/2 (140)	1 (25)	10 1/4 (260)	11 (279)	115 (52.2)
8"	20 (508)	9 5/8 (244)	15 1/2 (394)	6 3/4 (171)	1 1/8 (29)	10 1/4 (260)	13 1/2 (343)	195 (88.4)
10"	26 (660)	12 5/8 (321)	15 1/2 (394)	8 (203)	1 1/4 (32)	10 1/4 (260)	16 (406)	275 (124.7)

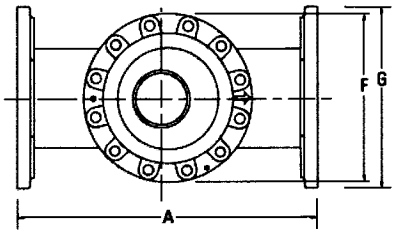

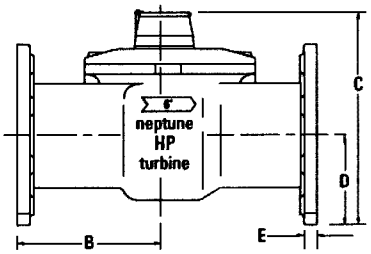

GUARANTEED SYSTEMS COMPATIBILITY

All HP Turbine water meters are guaranteed adaptable to our ARB®V, ProRead™ (ARB VI), E-Coder)R900*i*, E-Coder, TRICON®/S, TRICON/E3®, and Neptune meter reading systems without removing the meter from service.

REGISTRATION

Registration (per sweep hand revolution)		1 1/2", 2", 3", 4"	6", 8", 10"
1,000	US Gallons		3
1,000	Imperial Gallons		3
100	US Gallons	3	
100	Imperial Gallons	3	
100	Cubic Feet		3
10	Cubic Feet	3	
10	Cubic Metres		3
1	Cubic Metre	3	
Register Capacity (6-wheel odometer)		**1 1/2", 2", 3", 4"**	**6", 8", 10"**
1,000,000,000	US Gallons		3
1,000,000,000	Imperial Gallons		3
100,000,000	US Gallons	3	
100,000,000	Imperial Gallons	3	
100,000,000	Cubic Feet		3
10,000,000	Cubic Feet	3	
10,000,000	Cubic Metres		3
1,000,000	Cubic Metres	3	

SPECIFICATIONS

- Application: cold water measurement of flow in one direction
- Maximum operating pressure: 175 psi (1206 kPa)
- Maximum operating temperature: 80°F
- Register: direct reading, center sweep, roll-sealed, magnetic drive with low-flow indicator
- Measuring element: AWWA Class II Turbine, hydrodynamically balanced rotor

OPTIONS

- Sizes: 1 1/2", 2", 3", 4", 6", 8", 10"
- Units of measure: U.S. gallons, imperial gallons, cubic feet, cubic metres
- Register Types:
  - Direct reading: Bronze box and cover (standard)
  - Remote reading systems*: ARBV, ProRead, E-Coder)R900*i*, E-Coder, TRICON/S, TRICON/E3
  - Reclaim
- Companion flanges:
  - 1 1/2" and 2" (oval): bronze or cast iron
  - 3", 4", 6": bronze or cast iron
  - 8" and 10": cast iron
- Strainer:
  - 2"–6" ANSI/NSF 61 no-lead high copper alloy
  - 8"–10" ANSI/NSF 61 no-lead high copper alloy

** Consult factory for meter performance specifications when fitted with ARB.*

Neptune engages in ongoing research and development to improve and enhance its products. Therefore, Neptune reserves the right to change product or system specifications without notice.

Neptune Technology Group Inc.
1600 Alabama Highway 229
Tallassee, AL 36078
USA
Tel: (800) 645-1892
Fax: (334) 283-7299

Neptune Technology Group (Canada) Ltd.
7275 West Credit Avenue
Mississauga, Ontario
L5N 5M9
Canada
Tel: (905) 858-4211
Fax: (905) 858-0428

Neptune Technology Group Inc.
Ejército Nacional No. 418
Piso 12, Desp. 1201-1202
Col. Chapultepec Morales
Delegación Miguel Hidalgo
11570 México, Distrito Federal
Tel: (525) 55203 5294 / (525) 55203 5708
Fax: (525) 55203 6503

NEPTUNE TECHNOLOGY GROUP

neptunetg.com

PS TURB 11/2-10 04.06 © Copyright 2005, Neptune Technology Group Inc. Neptune is a registered trademark of Neptune Technology Group Inc.

ARB® UTILITY MANAGEMENT SYSTEMS™

High Performance (HP) Turbine Parts List

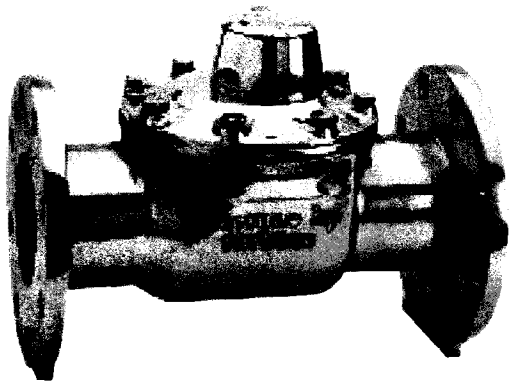

HIGH PERFORMANCE (HP) TURBINE PARTS LIST

1 1/2" & 2"

ITEM	DESCRIPTION	METER SIZE & PART NUMBERS	
		1 1/2" HP	2" HP
1	16" Seal Wire with Lead Seal	41110-501	41110-501
2	Seal Cap	11098-001	11098-001
3	Calibration Nut	8545-417	8545-417
4	Maincase Bolts (Qty)	N/A	N/A
5	Cover	9860-002	9860-002
6	Drive Spindle Assembly	9485-012	9485-012
7	Calibration Vane Assembly	11097-110	11097-110
8	Measuring Chamber Assembly	9861-200	9861-200
9	Bolts (Qty)	8396-605 (4)	8396-605 (4)
10	Maincase Gasket	9857-003	9857-003
11	Maincase	9854-012	9854-011
12	Cover Assembly	9859-200	9859-200
13	Lock Ring	9856-001	9856-001
14	Flow Conditioner/Strainer	9855-001	9855-001
15	O-Ring	8316-022	8316-022
16	Seal Ring (not shown)	8340-062	8340-062

3"-10"

ITEM	DESCRIPTION	METER SIZE AND PART NUMBERS				
		3" HP	4" HP	6" HP	8" HP	10" HP
1	Cover Assembly	11328-130	11328-230	11328-330	11328-430	11328-530
2	Cover	11361-002	11330-002	11359-002	11359-002	11359-002
3	Calibration Vane Stem Assembly	11354-000	11354-000	11354-000	11354-000	11354-000
4	Calibration Vane Stem O-Ring	8316-022	8316-022	8316-022	8316-022	8316-022
5	Calibration Vane Stem Nut	8545-417	8545-417	8545-417	8545-417	8545-417
6	Maincase Bolts	8329-405	8329-405	8329-421	8329-421	8329-421
7	Maincase O-Ring	8316-270	8316-271	8316-272	8316-272	8316-272
8	Measuring Chamber Assembly	11329-100	11329-200	11329-300	11329-400	11329-500
9	Magnet Gear Assembly	11347-110	11347-210	11347-310	11347-410	11347-510
10	Maincase	11360-003	11327-002	11356-011	11357-002	11358-002
11	Seal Tube (not shown)	11335-103	N/A	N/A	N/A	N/A
12	Element Seal (not shown)	N/A	11335-001	N/A	N/A	N/A
13	Drive Pinion	11352-001	11352-002	11352-003	11352-004	11352-005
14	Calibration Vane Gear	11353-001	11353-001	11353-001	11353-001	11353-001
15	Calibration Vane Spindle Assembly	11345-100	11345-200	11345-300	11345-300	11345-300

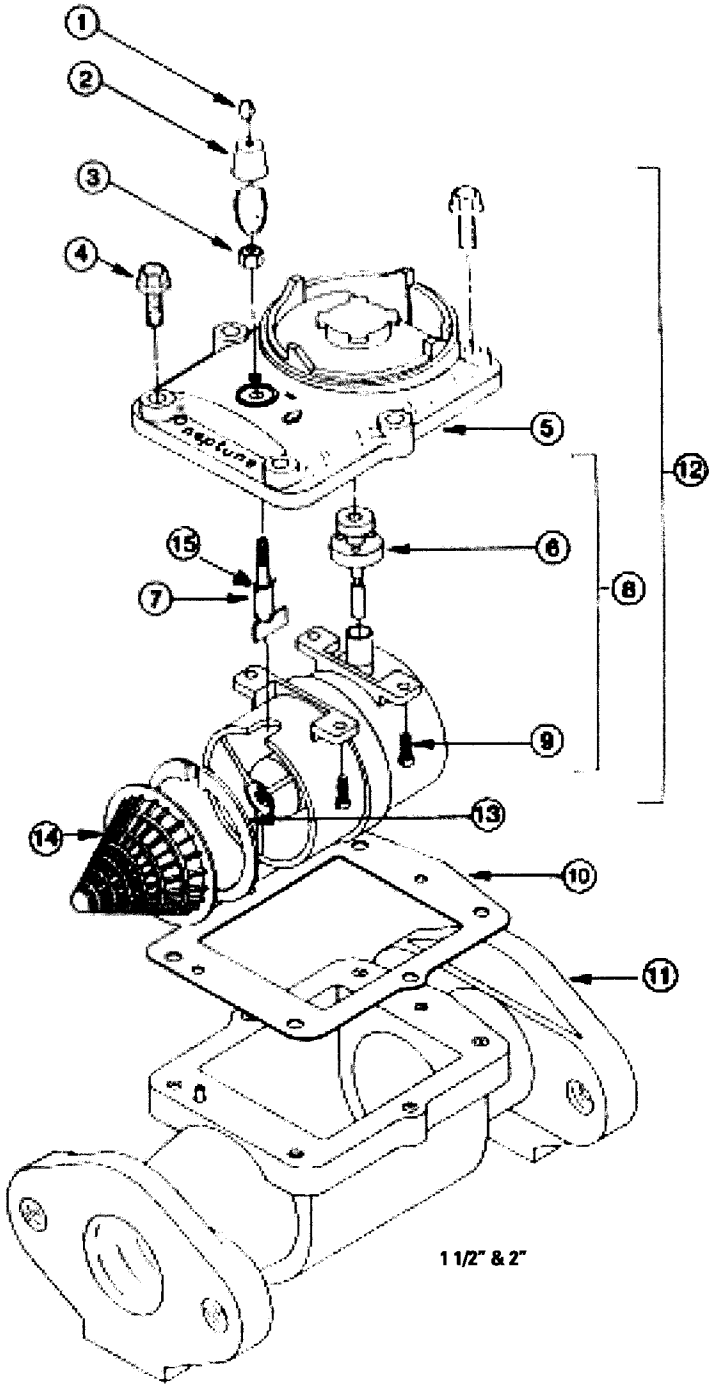

1 1/2" & 2"

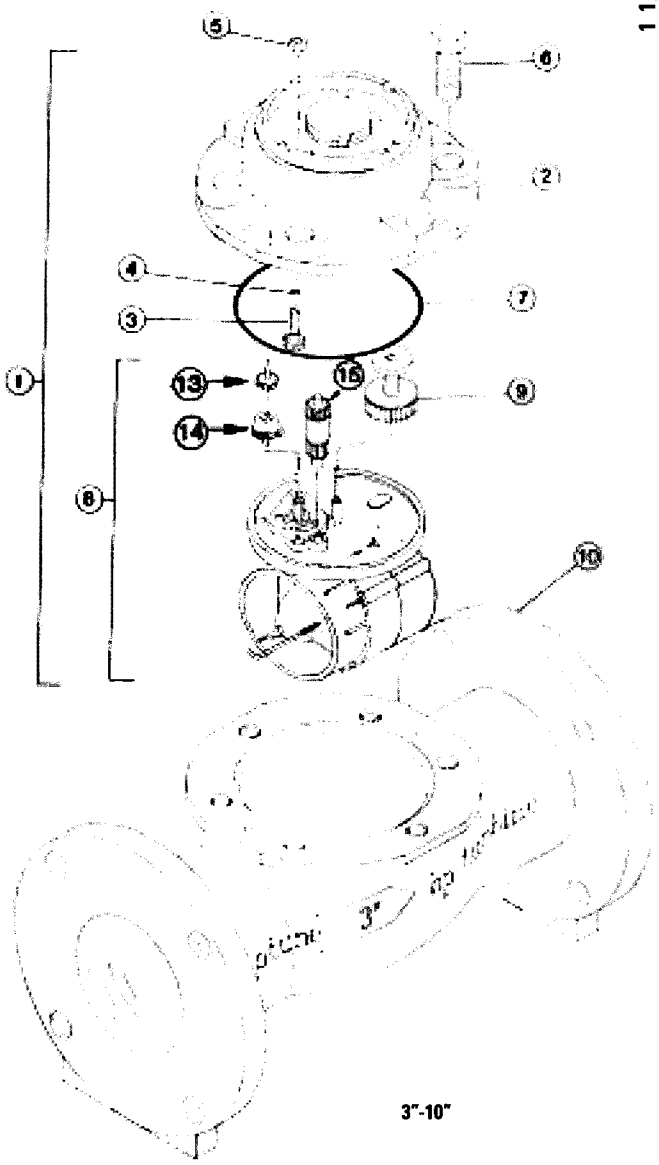

3"-10"

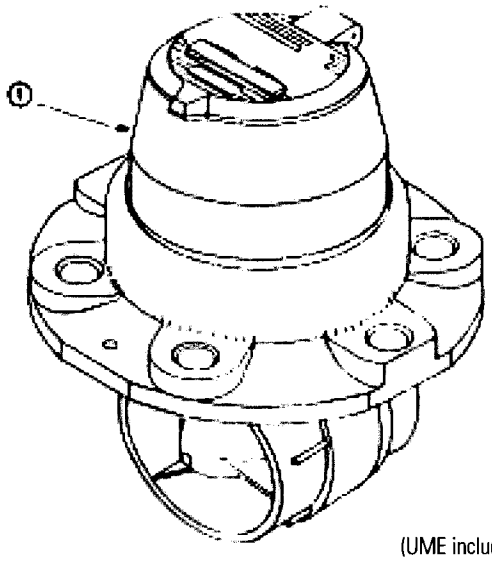

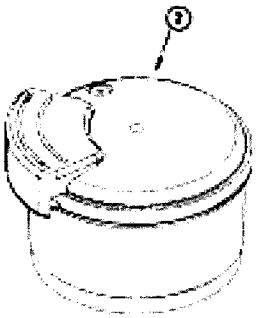

(UME includes: Register, Gasket, Cover, and Turbine Rotor Assembly)

SIZE	REGISTRATION	DIRECT READ		ProRead™ (Pit) 4-Wheel*		ProRead™ (Pit) 6-Wheel*		E-CODER® (Pit)		E-CODER)R900*i*™ (Pit)	
		REGISTER	UME	REGISTER	UME	REGISTER	UME	REGISTER	UME	REGISTER	UME
1½" & 2" HP	Cu. Ft	R85F1	9700-010	R75F11	9700-011	R75F12	9700-018	RH5F11	9700-019	RW5F11	9700-001
	Gal	R85G1	9700-020	R75G11	9700-021	R75G12	9700-028	RH5G11	9700-029	RW5G11	9700-002
	M^3	R85M1	9700-040	R75M11	9700-041	R75M12	9700-048	RH5M11	9700-049	RW5M11	9700-004
3" HP	Cu. Ft	R85F2	9700-110	R75F21	9700-111	R75F22	9700-118	RH5F21	9700-119	RW5F21	9700-101
	Gal	R85G2	9700-120	R75G21	9700-121	R75G22	9700-128	RH5G21	9700-129	RW5G21	9700-102
	M^3	R85M2	9700-140	R75M21	9700-141	R75M22	9700-148	RH5M21	9700-149	RW5M21	9700-104
4" HP	Cu. Ft	R85F3	9700-210	R75F31	9700-211	R75F32	9700-218	RH5F31	9700-219	RW5F31	9700-201
	Gal	R85G3	9700-220	R75G31	9700-221	R75G32	9700-228	RH5G31	9700-229	RW5G31	9700-202
	M^3	R85M3	9700-240	R75M31	9700-241	R75M32	9700-248	RH5M31	9700-249	RW5M31	9700-204
6" HP	Cu. Ft	R85F4	9700-310	R75F41	9700-311	R75F42	9700-318	RH5F41	9700-319	RW5F41	9700-301
	Gal	R85G4	9700-320	R75G41	9700-321	R75G42	9700-328	RH5G41	9700-329	RW5G41	9700-302
	M^3	R85M4	9700-340	R75M41	9700-341	R75M42	9700-348	RH5M41	9700-349	RW5M41	9700-304
8" HP	Cu. Ft	R85F5	9700-410	R75F51	9700-411	R75F52	9700-418	RH5F51	9700-419	RW5F51	9700-401
	Gal	R85G5	9700-420	R75G51	9700-421	R75G52	9700-428	RH5G51	9700-429	RW5G51	9700-402
	M^3	R85M5	9700-440	R75M51	9700-441	R75M52	9700-448	RH5M51	9700-449	RW5M51	9700-404
10" HP	Cu. Ft	R85F0	9700-510	R75F01	9700-511	R75F02	9700-518	RH5F01	9700-519	RW5F01	9700-501
	Gal	R85G0	9700-520	R75G01	9700-521	R75G02	9700-528	RH5G01	9700-529	RW5G01	9700-502
	M^3	R85M0	9700-540	R75M01	9700-541	R75M02	9700-548	RH5M01	9700-549	RW5M01	9700-504

*Registers do not include ARB® remote receptacles.

Note: When ordering registers, please include change gear combination or four-digit register code from dial face.

Neptune engages in ongoing research and development to improve and enhance its products. Therefore, Neptune reserves the right to change product or system specifications without notice.

Neptune Technology Group Inc.
1600 Alabama Highway 229
Tallassee, AL 36078
USA
Tel: (800) 645-1892
Fax: (334) 283-7293

Neptune Technology Group (Canada) Ltd.
7275 West Credit Avenue
Mississauga, Ontario
L5N 5M9
Canada
Tel: (905) 858-4211
Fax: (905) 858-0428

Neptune Technology Group Inc.
Ejército Nacional No. 418
Piso 12, Desp. 1201-1202
Col. Chapultepec Morales
Delegación Miguel Hidalgo
11570 México, Distrito Federal
Tel: (525) 55203 5294 / (525) 55203 5708
Fax: (525) 55203 6503

NEPTUNE
TECHNOLOGY GROUP
TAKE CONTROL

neptunetg.com

PL TURB 03.10 © Copyright 2010, Neptune Technology Group Inc. Neptune is a registered trademark of Neptune Technology Group Inc.

ARB® UTILITY MANAGEMENT SYSTEMS™

NEPTUNE
TECHNOLOGY GROUP

MRX920™
MOBILE DATA COLLECTOR

MRX920™ Mobile Data Collector

Neptune's MRX920™ is a rugged, portable, easy-to-use automatic meter reading device. Weighing only five pounds, the MRX920 is small enough to fit in any vehicle and comes with a carrying case or optional mobile office unit to be stowed or fastened in a location of your choice. Within minutes, the MRX920 can be securely placed in any vehicle and powered via the vehicle power source.

Data transmitted by R900® radio frequency (RF) meter interface units (MIUs) is received and stored by the MRX920 Mobile Data Collector. Information can be quickly uploaded to Neptune's host meter reading software at the utility office. The host software transfers the customer information to the Customer Information System (CIS) to generate customer bills. The MRX920 unit also captures the advanced features of the E-Coder® Solid State Absolute Encoder register connected to an R900 MIU*. These features include leak detection, tamper detection, and reverse flow indication.

The MX900 mobile data collection software runs on the user's laptop computer and is designed to support maximum efficiency. This software supports a USB connection or a wireless connection via WiFi to the MRX920 receiver and utilizes menu-driven commands to allow the user to effortlessly control all aspects of the meter reading process. No operator intervention is necessary once data collection has started. At any time, the operator can view either read or unread accounts with the touch of a button.

UTILITY ADVANTAGES

The MRX920 unit provides the meter reading industry with many advantages over other existing AMR systems:

- Industry-leading performance in a compact and affordable package
- Improves meter reading accuracy
- Addresses "hard-to-read" meters
- Increases meter reader safety
- Reduces man-hours needed to collect and process meter reading information
- Supports any size utility
- Portable and easy to set up

KEY FEATURES

- USB or wireless connection to the receiver via WiFi
- RF test application receives meter data information without loading a route
- Digital signal processing for improved meter reading throughput
- Portable for use in any vehicle
- Low power consumption (< 1A) allows for multiple devices to be connected in the same vehicle
- Intuitive graphical user interface
- Supports E-Coder advanced features**
- Supported by a courteous and knowledgeable Customer Support Center
- GPS mapping
- Wireless loading/unloading of routes

KEY BENEFITS

- Reads up to eight meters simultaneously and can process 70 unique meter readings per second
- Maximizes meter reading success rates and overall field and office efficiency
- Reduces potential liability to utility through improved meter reader safety
- Does not require a special or customized vehicle
- Operates from standard 12V DC vehicle power source (i.e., cigarette lighter)
- Will support leak detection, tamper detection, and reverse flow indication
- Courteous, prompt, and conscientious Support Specialists available if needed

** When connected to second generation R900 or later.*

*** Indication of E-Coder.*

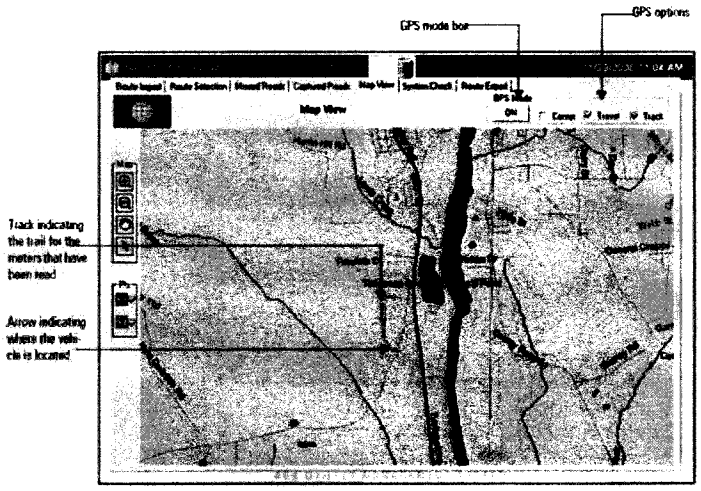

MX900 software is designed to significantly reduce the time required to collect and process meter reading data while increasing meter reader safety and efficiency. The mobile data collection software provides an optional GPS mapping view. The mapping view allows the operator to monitor route completion by visually determining unread accounts which are represented as colored objects on the map. The operator can stop along the route anytime it is safe to do so and monitors each route loaded into the software. As an added feature, the MX900 also allows the operator to view special conditions that may exist in the route. Conditions such as high/low alarms and tamper alarms are also visible to the operator. For those utilities with Neptune E-Coder-equipped meters, value-added warning flags such as leak detection are also available. This optional mapping package can be ordered with or added to any existing MRX920 Mobile Data Collector. Adding the optional mapping solution could not be easier – as no additional hardware is required.

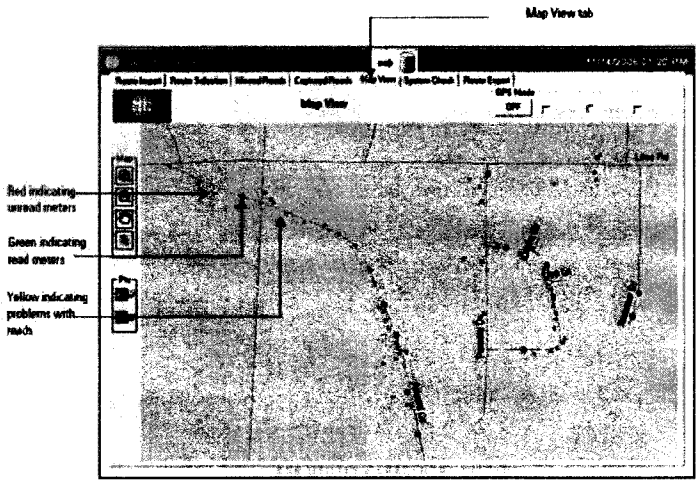

SPECIFICATIONS

- Electrical Specifications:
  - Power consumption: < 1A
  - Power supply: 12V DC via vehicle power source adapter
- In order to adequately run the MX900 software, the laptop you use must meet the following minimum specifications:
  - Operating System
    - Windows XP (Service Pack 2)
    - Windows Vista
    - Windows 7
  - Processor – Intel Pentium processor 1.7 GHz
  - Memory – 1 GB expandable to 2 GB
  - Display – 12.1" XGA (800x600)
  - Keyboard – 89-key
  - Communication
    - Internal 802.11 b/g wireless LAN
    - Windows Wireless Connection Manager (if WiFi connection to the receiver is desired)
    - GPS receiver (if GPS location tracking is desired)
  - USB 2.0

The MRX920 is an in-vehicle mobile data collector which is designed to be occasionally used in bumpy terrain found in rural meter reading routes. This needs to be taken into consideration when choosing a laptop. Should your utility operate the MRX920 in bumpy conditions or should you require a display rated for outdoor visibility, Neptune recommends considering a ruggedized laptop such as a Panasonic Toughbook or equivalent.

- Environmental Conditions:
  - Operating temperature: 32° to 122° F (0° to 50° C)
  - Storage temperature: -40° to 185° F (-40° to 85°C)
  - Operating humidity: 5 to 95% non-condensing relative humidity
- Physical Specifications
  - Shipping weight: ~5 lbs

Neptune Technology Group Inc.
1600 Alabama Highway 229
Tallassee, AL 36078
USA
Tel: (800) 645-1892
Fax: (334) 283-7293

Neptune Technology Group (Canada) Ltd.
7275 West Credit Avenue
Mississauga, Ontario
L5N 5M9
Canada
Tel: (905) 858-4211
Fax: (905) 858-0428

Neptune Technology Group Inc.
Ejército Nacional No. 418
Piso 12, Desp. 1201-1202
Col. Chapultepec Morales
Delegación Miguel Hidalgo
11570 México, Distrito Federal
Tel: (525) 55203 5294 / (525) 55203 5708
Fax: (525) 55203 6503

NEPTUNE TECHNOLOGY GROUP
neptunetg.com

PS MRX920 12.10 © Copyright 2010, Neptune Technology Group Inc. Neptune is a registered trademark of Neptune Technology Group Inc.

Neptune engages in ongoing research and development to improve and enhance its products. Therefore, Neptune reserves the right to change product or system specifications without notice.

ARB® UTILITY MANAGEMENT SYSTEMS™

NEPTUNE TECHNOLOGY GROUP

E-CODER) R900*i* ™

INSIDE AND PIT VERSIONS

E-Coder) R900*i*™
Inside Version

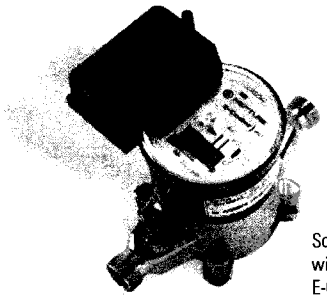

E-Coder) R900*i*™
Pit Version

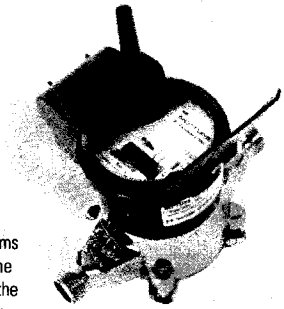

Solving tomorrow's problems with today's technology, the E-Coder)R900*i* combines the field-proven R900 with our solid-state absolute E-Coder.

The E-Coder)R900*i*™ combines the field-proven R900® radio frequency meter interface unit (MIU) with our E-Coder® solid-state absolute encoder into one integrated package to offer utilities the advantages of the cost savings associated with the ease and speed of installation. The E-Coder)R900*i* does not have any external wires to be installed or require any special programming for operation. The E-Coder)R900*i* operates within the 902-928 unlicensed RF band.

The R900 MIU portion of the integrated unit collects meter-usage data and transmits the data for collection by the meter reader. Data transmitted by the R900 MIU is received by the Neptune walk-by, mobile, or R900 Gateway (GPRS or WiFi) fixed base data collection systems and stored for downloading at the utility office. The R900 MIU is a one-way communication device that transmits data every 14 seconds using frequency-hopping, spread-spectrum technology to ensure data security and improved meter reading accuracy and reliability. The E-Coder portion of the integrated unit features a custom integrated circuit design that digitally encodes the rotation of the measuring chamber, providing "absolute" registration with no internal battery requirement.

The E-Coder)R900*i* provides high resolution, 8-digit remote meter reading and data logging along with value-added features such as leak, tamper, and reverse flow detection. The data logging functionality provides up-to-the hour consumption data. Consumption is recorded as it happens, every hour on the hour, helping to identify existing or potential problems. Graphic charts can be generated to show a possible leak when usage doesn't approach or reach zero. When a leak flag is triggered, the utility can identify when the event actually occurs; the same goes for negative consumption that implies a backflow event.

Using Neptune's E-Coder)R900*i* with data logging, the utility can send a reader to retrieve up to 96 days of historical data directly from the meter, and then download the information directly into ARB® N_SIGHT™ Mobile host software. The daily or hourly consumption can then be run as a graph – justifying the amount charged on the bill. Neptune's data logging is simple, with the system designed to minimize download time as well as service technician visits.

It's not unusual for a utility to field a customer complaint regarding a high water bill. But until now, that utility didn't have the information that proved not only that the excess consumption occurred, but exactly when it occurred.

The E-Coder)R900*i* PLUS features are communicated through the E-Coder protocol, allowing host software platforms to interpret the data and pass the information directly to the billing packages, CIS screens, and operations and maintenance reports. The value-added data received through Neptune's E-Coder)R900*i* enhances customer service and improves operational efficiencies.

The E-Coder)R900*i* Inside Version
The inside version features a plastic enclosure with an integrated antenna. This unit also features a field-replaceable battery.

The E-Coder)R900*i* Pit Version
The pit version features a roll-sealed copper shell and glass lens housing for superior protection in a flooded pit environment. The standard unit is designed with a whip antenna for installation under a pit lid and can be easily upgraded to a through-the-lid antenna if desired. The unit also features a field replaceable battery.

KEY FEATURES

- 8-digit remote meter reading and usage profiling
- Logs 96 days of hourly consumption data
- Leak, tamper, and reverse flow detection
- Ease of installation – no external wiring
- Solid-state absolute encoder
- No FCC license required
- No MIU programming required
- Long-life lithium battery with capacitor
- Encoder metrology requires no battery
- Available in both pit and inside versions
- Fully submersible pit version
- LCD leak indicators
- Directional flow indicator
- Rate of flow on LCD display

KEY BENEFITS

- Enhanced "customer care"
  - Leak history/diagnostics
  - Proactive leak notification
  - Provides hourly consumption data
  - Improves meter reading accuracy
  - Eliminates estimated reads
- Enhanced cost savings and ease of installation
  - No external wires
  - Reduces labor cost
  - Reduces potential wire vandalism
- Drought management
  - Reduction of water loss through proactive notification of water leaks
  - Ability to enforce odd/even day water restrictions
- Increased operational efficiencies
  - Reduces costs
  - Minimizes reading time
  - Improves meter reading safety
  - Work order reduction for high-water bill inquiries
  - Prioritization of meter maintenance
- Tamper management
  - Identification and prioritization of potential tamper situations

PARTS

Replaceable Battery 1
Antenna 2
Light Sensor 3
Flow Indicators 4
Date of Manufacture 5
LCD Display 6
T-10 Meter 7

E-Coder R900*i*™

ICONS AND DISPLAYS

	ON OFF FLASHING (-) (+)
	OFF FLASHING ON CONTINUOUSLY
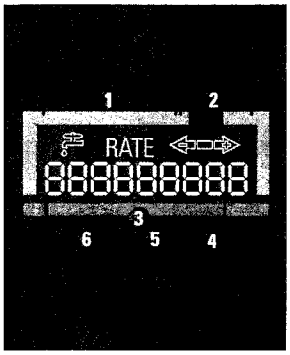	1 2 3 4 5 6

TECHNICAL SPECIFICATIONS

- Electrical Specifications:
  - MIU Power: Lithium battery with capacitor
- Transmitter Specifications:
  - Transmit period: Every 14 seconds
  - Transmitter channels: 50
  - Channel frequency: 910 to 920 MHz spread spectrum
  - Output Power: Meets FCC Part 15.247
  - FCC Verification: Part 15.247
- Environmental Conditions: MIU and E-Coder
  - Operating temperature: -22°F to 149°F (-30°C to 65°C)
  - Storage temperature: -40°F to 158°F (-40°C to 70°C)
  - Operating humidity:
    - Inside Set: 0 to 95%, condensing
    - Pit Set: 100% submersible
- Materials
- Register housing:
  - Inside Set: Plastic Polycarbonate
  - Pit Set: Roll-sealed copper shell
- Lens:
  - Inside Set: Plastic
  - Pit Set: Glass
- Antennas
  - Inside Set: Fixed antenna
  - Pit Set: Standard whip type

  Optional through the lid
  - 18" Coax
  - 6' Coax
  - 20' Coax

OPTIONS

- Sizes
  - Available for all sizes and makes of current Neptune meters
  - Data Collection Systems
    - Handhelds - Walk-by RF
    - MRX920™/MTX950™ - Mobile RF
    - R900® GPRS and WiFi Gateways
- Units of Measure: U.S. Gallons, Cubic Feet, Imperial Gallons, Cubic Metres

WARRANTY

- Register: 20 years (10/10)
- R900 MIU: 20 years (10/10)
- R900 Battery: 20 years (10/10)

Neptune engages in ongoing research and development to improve and enhance its products. Therefore, Neptune reserves the right to change product or system specifications without notice.

Neptune Technology Group Inc.
1600 Alabama Highway 229
Tallassee, AL 36078
USA
Tel: (800) 645-1892
Fax: (334) 283-7299

Neptune Technology Group (Canada) Ltd.
7275 West Credit Avenue
Mississauga, Ontario
L5N 5M9
Canada
Tel: (905) 858-4211
Fax: (905) 858-0428

Neptune Technology Group Inc.
Ejército Nacional No. 418
Piso 12, Desp. 1201-1202
Col. Chapultepec Morales
Delegación Miguel Hidalgo
11570 México, Distrito Federal
Tel: (525) 55203 5294 / (525) 55203 5708
Fax: (525) 55203 6503

NEPTUNE TECHNOLOGY GROUP
neptunetg.com

PS ECODERR900*i* 06.09 © Copyright 2009, Neptune Technology Group Inc. Neptune is a registered trademark of Neptune Technology Group Inc.

ARB® UTILITY MANAGEMENT SYSTEMS™

NEPTUNE
TECHNOLOGY GROUP

T-10 METER

SIZES: 1 1/2" and 2"

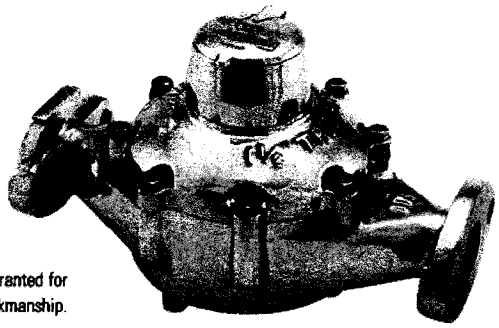

T-10 water meters are warranted for performance, materials, and workmanship.

Every T-10 water meter meets or exceeds the latest AWWA C700 Standard. Its nutating disc, positive displacement principle is time-proven for accuracy and dependability since 1892, ensuring maximum utility revenue.

CONSTRUCTION

The T-10 water meter consists of three major assemblies: a register, a no-lead high copper alloy maincase, and a nutating disc measuring chamber.

The T-10 meter is available with a variety of register types. For reading convenience, the register can be mounted in one of four positions on the meter.

The corrosion-resistant no-lead high copper alloy maincase will withstand most service conditions: internal water pressure, rough handling, and in-line piping stress.

The innovative floating chamber design of the nutating disc measuring element protects the chamber from frost damage while the unique chamber seal extends the low flow accuracy by sealing the chamber outlet port to the maincase outlet port. The nutating disc measuring element utilizes corrosion-resistant materials throughout and a thrust roller to minimize wear.

WARRANTY

Neptune provides a limited warranty with respect to its T-10 water meters for performance, materials and workmanship.

When desired, maintenance is easily accomplished either by replacement of major assemblies or individual components.

KEY FEATURES

- Register
  - Magnetic drive, low torque registration ensures accuracy
  - Impact-resistant register
  - High resolution, low flow leak detection
  - Bayonet style register mount allows in-line serviceability
  - Tamperproof seal pin deters theft
  - Date of manufacture, size, and model stamped on dial face
- No-Lead Maincase
  - Made from no-lead high copper alloy
  - ANSI/NSF 61 Certified
  - Lifetime guarantee
  - Resists internal pressure stresses and external damage
  - Handles in-line piping variations and stresses
  - No-lead high copper alloy provides residual value vs. plastic
  - Electrical grounding continuity
- Nutating Disc Measuring Chamber
  - Positive displacement
  - Widest effective flow range for maximum revenue
  - Proprietary polymer materials maximize long term accuracy
  - Floating chamber design is unaffected by meter position or in-line piping stresses

SYSTEMS COMPATIBILITY

Adaptability to all present and future systems for flexibility is available only with Neptune's ARB® Utility Management Systems™.

1 1/2" ACCURACY

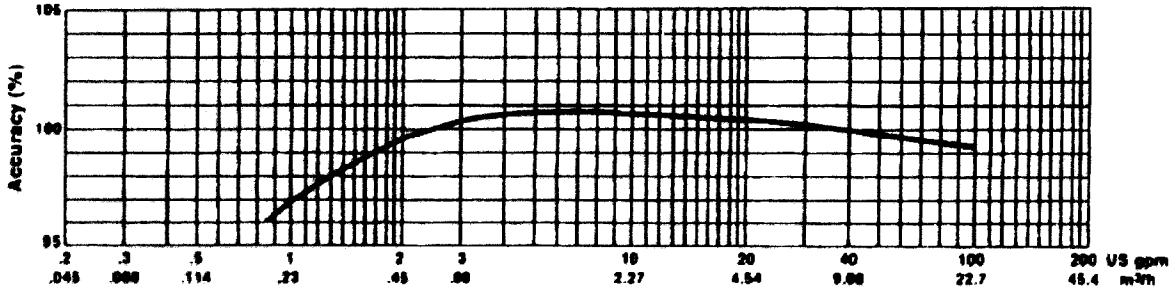

2" ACCURACY

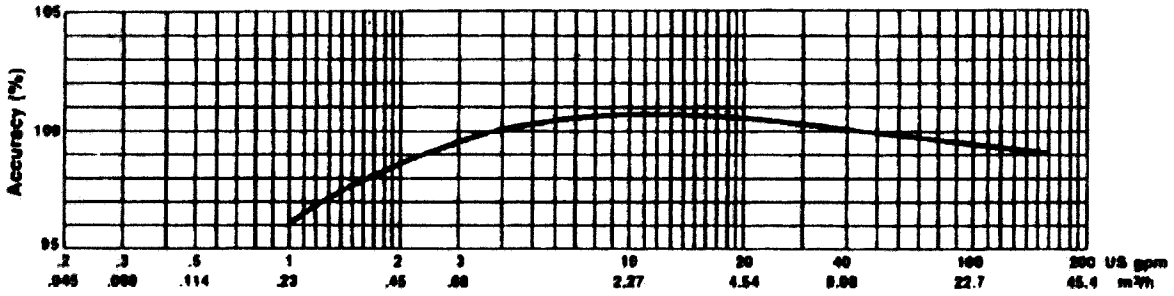

1 1/2" PRESSURE LOSS

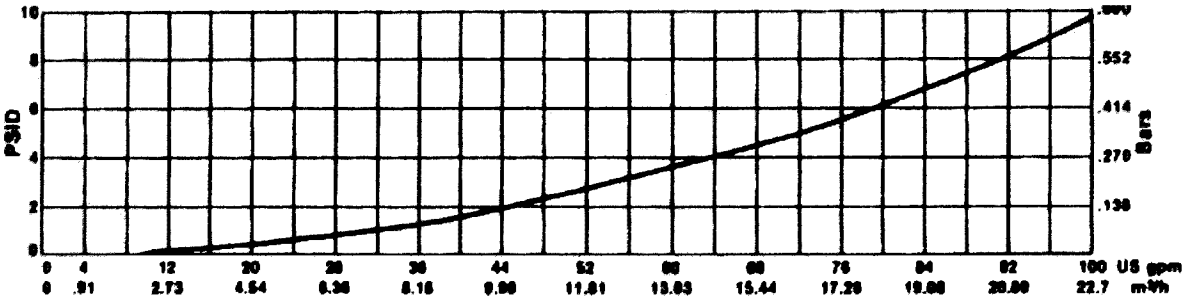

2" PRESSURE LOSS

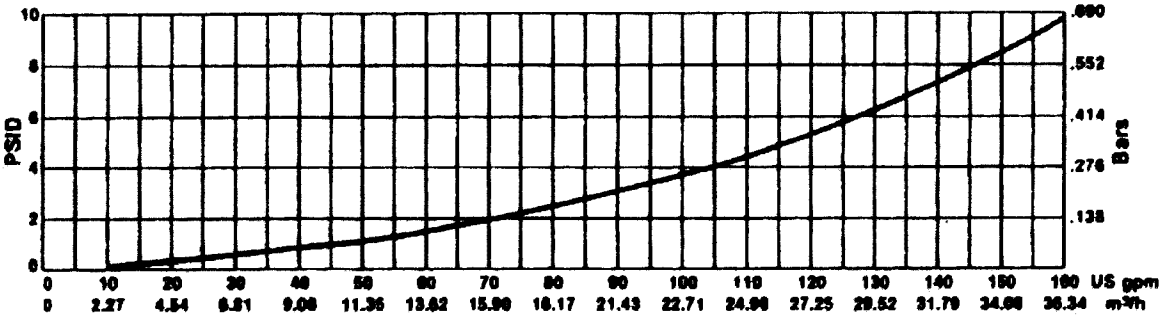

These charts show typical meter performance. Individual results may vary.

OPERATING CHARACTERISTICS

Meter Size	Normal Operating Range @100% Accuracy (±1.5%)	AWWA Standard	Low Flow @ 95% Accuracy
1 1/2"	2 to 100 US gpm	5 to 100 US gpm	3/4 US gpm
	0.46 to 22.73 m³/h	1.1 to 22.7 m³/h	0.17 m³/h
2"	2 1/2 to 160 US gpm	8 to 160 US gpm	1 US gpm
	0.57 to 36.36 m³/h	1.8 to 36.3 m³/h	0.23 m³/h

DIMENSIONS

Meter Size	A in/mm	B in/mm	C-Std. in/mm	C-ARB in/mm	D-Threads per inch	D-Thread Type	E in/mm	Weight lbs/kg
1 1/2"	12 5/8	8 1/16	8 1/8	8 9/16	11 1/2	1 1/2"	2 9/16	31
Screw End	321	205	206	217		NPT	65	14.1
1 1/2"	13	8 1/16	8 1/8	8 9/16	—	—	2 9/16	35
Flanged End	330	205	206	217			65	15.9
2"	15 1/4	9 7/16	9 5/16	9 3/4	11 1/2	2"	3 1/8	40
Screw End	387	240	237	248		NPT	79	18.1
2"	17	9 7/16	9 5/16	9 3/4	—	—	3 1/8	44
Flanged End	432	240	237	248			79	20.0

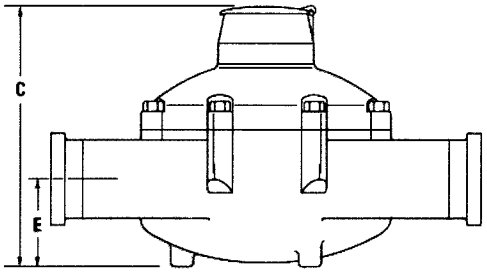

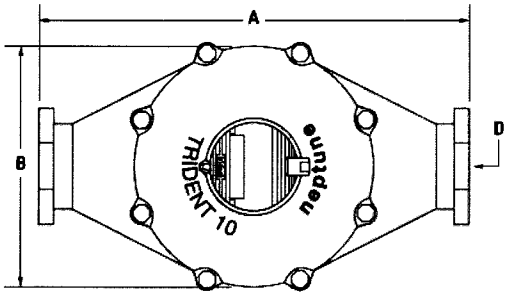

GUARANTEED SYSTEMS COMPATIBILITY

All T-10 meters are guaranteed adaptable to our ARB®V, ProRead (ARB VI), E-CODER™(ARB VII), E-Coder)R900*i*, TRICON®/S, TRICON/E3®, and Neptune meter reading systems without removing the meter from service.

REGISTRATION

ProRead Registration (per sweep hand revolution)		1 ½"	2"
100	US Gallons	✓	✓
100	Imperial Gallons	✓	✓
10	Cubic Feet	✓	✓
1	Cubic Metre		✓
0.1	Cubic Metre	✓	
Register Capacity ProRead & E-coder		**1 ½"**	**2"**
1	US Gallons	✓	✓
1	Imperial Gallons	✓	✓
0.1	Cubic Feet	✓	✓
0.001	Cubic Metres	✓	✓
E-Coder High Resolution (8-digit reading)		**1½"**	**2"**
1	US Gallons	✓	✓
1	Imperial Gallons	✓	✓
.1	Cubic Feet	✓	✓
0.001	M^3	✓	✓

SPECIFICATIONS

- Certification: ANSI/ NSF 61
- Application: cold water measurement of flow in one direction
- Maximum operating water pressure: 150 psi (1034 kPa)
- Maximum operating water temperature: 80°F
- Measuring chamber: nutating disc technology design made from proprietary synthetic polymer

OPTIONS

- Sizes:
  - 1 1/2" flanged or threaded end
  - 2" flanged or threaded end
- Units of measure: U.S. gallons, imperial gallons, cubic feet, cubic metres
- Register types:
  - Direct reading: Bronze box and cover (standard)
  - Remote reading: ProRead Absolute Encoder, E-Coder, E-Coder)R900*i*, TRICON/S, TRICON/E3
  - Reclaim
- Measuring chamber: synthetic polymer
- Companion flanges: cast iron or no-lead high copper alloy
- Environmental Conditions:
  - Operating temperature: 33°F to 149°F (0°C to 65°C)
  - Storage temperature: 33°F to 158°F (0°C to 70°C)

Neptune engages in ongoing research and development to improve and enhance its products. Therefore, Neptune reserves the right to change product or system specifications without notice.

Neptune Technology Group Inc.
1600 Alabama Highway 229
Tallassee, AL 36078
USA
Tel: (800) 645-1892
Fax: (334) 283-7299

Neptune Technology Group (Canada) Ltd.
7275 West Credit Avenue
Mississauga, Ontario
L5N 5M9
Canada
Tel: (905) 858-4211
Fax: (905) 858-0428

Neptune Technology Group Inc.
Ejército Nacional No. 418
Piso 12, Desp. 1201-1202
Col. Chapultepec Morales
Delegación Miguel Hidalgo
11570 México, Distrito Federal
Tel: (525) 55203 5294 / (525) 55203 5708
Fax: (525) 55203 6503

NEPTUNE TECHNOLOGY GROUP

neptunetg.com

PS T10INT 04.06 © Copyright 2006, Neptune Technology Group Inc. ARB and TRICON are registered trademarks of Neptune Technology Group, Inc.

ARB® UTILITY MANAGEMENT SYSTEMS™

NEPTUNE
TECHNOLOGY GROUP

T-10 METER

SIZES: 5/8", 3/4", and 1"

T-10 water meters are warranted for performance, materials, and workmanship.

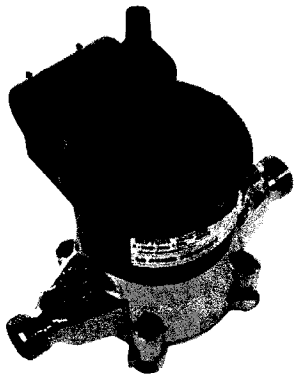

Every T-10 water meter meets or exceeds the latest AWWA C700 Standard. Its nutating disc, positive displacement principle has been time-proven for accuracy and dependability since 1892, ensuring maximum utility revenue.

CONSTRUCTION

The T-10 water meter consists of three major assemblies: a register, a lead free high copper alloy maincase, and a nutating disc measuring chamber.

The T-10 meter is available with a variety of register types. For reading convenience, the register can be mounted in one of four positions on the meter.

The corrosion-resistant lead free high copper alloy maincase will withstand most service conditions; internal water pressure, rough handling, and in-line piping stress.

The innovative floating chamber design of the nutating disc measuring element protects the chamber from frost damage while the unique chamber seal extends the low flow accuracy by sealing the chamber outlet port to the maincase outlet port. The nutating disc measuring element utilizes corrosion-resistant materials throughout and a thrust roller to minimize wear.

WARRANTY

Neptune provides a limited warranty with respect to its T-10 water meters for performance, materials, and workmanship.

When desired, maintenance is easily accomplished either by replacement of major assemblies or individual components.

GUARANTEED SYSTEMS COMPATIBILITY

All T-10 water meters are guaranteed adaptable to our ARB®V, ProRead™ (ARB VI) AutoDetect, E-Coder® (ARB VII), E-Coder)R900*i*™, TRICON®/S, TRICON/E®3, and Neptune meter reading systems without removing the meter from service.

KEY FEATURES

- Register
  - Magnetic drive, low torque registration ensures accuracy
  - Impact-resistant register
  - High resolution, low flow leak detection
  - Bayonet style register mount allows in-line serviceability
  - Tamperproof seal pin deters theft
  - Date of manufacture, size, and model stamped on dial face
- Lead Free Maincase
  - Made from lead free high copper alloy
  - NSF/ANSI 61 certified, Annex F and Annex G compliant
  - Lifetime guarantee
  - Resists internal pressure stresses and external damage
  - Handles in-line piping variations and stresses
  - Lead free high copper alloy provides residual value vs. plastic or composite
  - Electrical grounding continuity
- Nutating Disc Measuring Chamber
  - Positive displacement
  - Widest effective flow range for maximum revenue
  - Proprietary polymer materials maximize long-term accuracy
  - Floating chamber design is unaffected by meter position or in-line piping stresses

SYSTEMS COMPATIBILITY

Adaptability to all present and future systems for flexibility is available only with Neptune's ARB® Utility Management Systems™.

5/8" ACCURACY

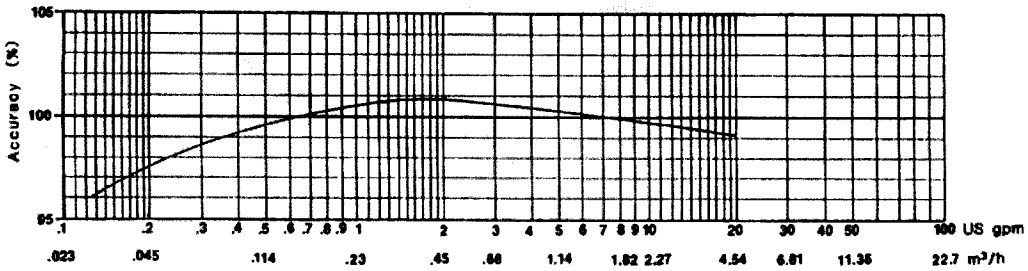

3/4" ACCURACY

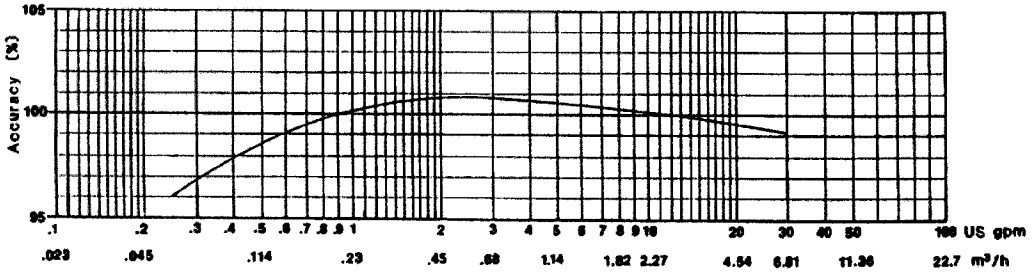

1" ACCURACY

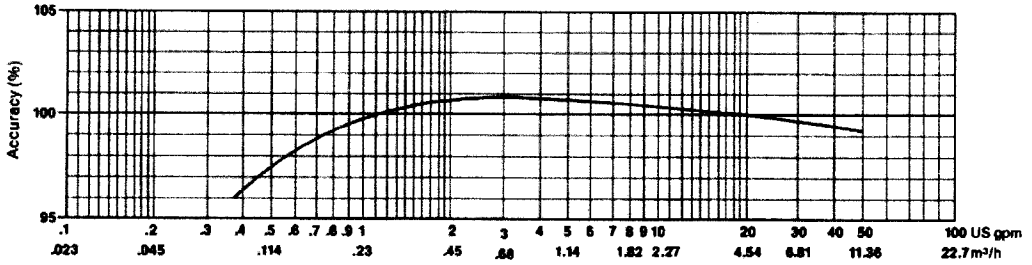

DIMENSIONS

Meter Size	A in/mm	B in/mm	C-Std. in/mm	C-ARB in/mm	C E-Coder) R900*i*	D Threads per inch	D-OD in/mm	E in/mm	F in/mm	Weight lbs/kg
5/8"	7 1/2 191	3 5/8 92	4 3/8 111	5 1/4 133	6 7/8 175	14	1.03 26	1 1/2 38	2 1/2 64	3 1/4 1.4
5/8" x 3/4"	7 1/2 191	3 5/8 92	4 3/8 111	5 1/4 133	6 7/8 175	11 1/2	1.29 33	1 1/2 38	2 5/8 67	3 3/8 1.5
Circa 2011 5/8"	7 1/2 191	3 5/8 92	4 7/8 124	5 3/4 146	7 3/8 187	14	1.03 26	1 5/8 41	2 1/2 64	3 3/4 1.7
Circa 2011 5/8" x 3/4"	7 1/2 191	3 5/8 92	4 7/8 124	5 3/4 146	7 3/8 187	11 1/2	1.29 33	1 5/8 41	2 5/8 67	4 1.8
3/4"	9 229	4 3/8 111	5 1/2 140	6 1/4 159	7 7/8 200	11 1/2	1.29 33	1 7/8 48	2 5/8 67	6 2.7
3/4" SL	7 1/2 911	4 3/8 111	5 1/2 140	6 1/4 159	7 7/8 200	11 1/2	1.29 33	1 7/8 48	2 5/8 67	5 1/2 2.5
3/4" x 1"	9 229	4 3/8 111	5 1/2 140	6 1/4 159	7 7/8 200	11 1/2	1.62 41	1 7/8 48	2 3/4 70	6 1/2 2.9
1"	10 3/4 273	6 1/2 165	6 3/8 162	7 1/8 181	8 3/4 222	11 1/2	1.62 41	2 1/8 54	2 3/4 70	9 3/4 4.4
1" x 1 1/4"	10 3/4 273	6 1/2 165	6 3/8 162	7 1/8 181	8 3/4 222	11 1/2	1.86 47	2 1/8 54	2 13/16 71	10 1/4 4.6

5/8" PRESSURE LOSS

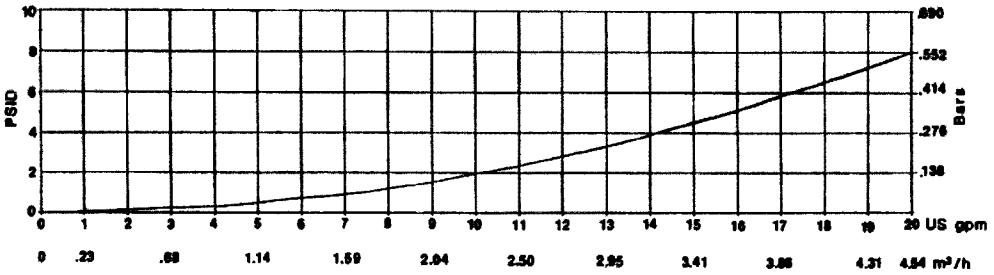

3/4" PRESSURE LOSS

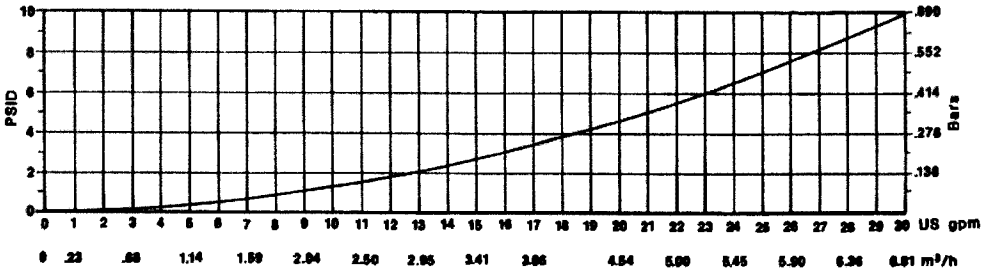

1" PRESSURE LOSS

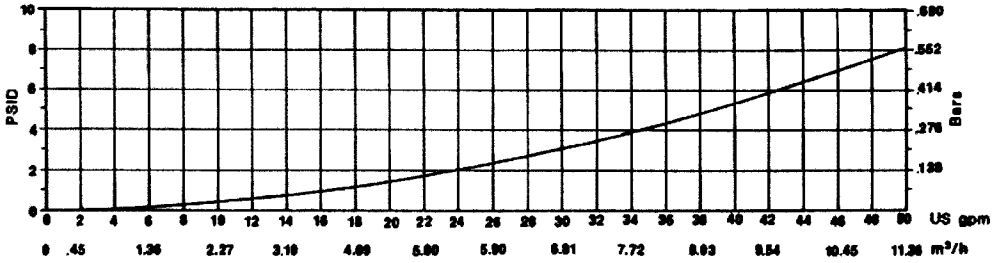

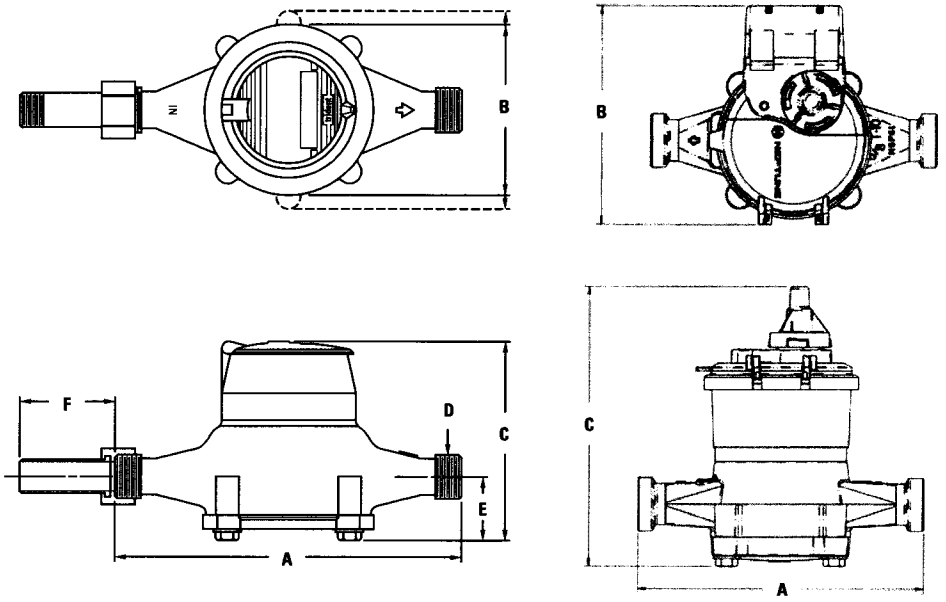

OPERATING CHARACTERISTICS:

Meter Size	Normal Operating Range @ 100% Accuracy (+/- 1.5%)	AWWA Standard	Low Flow @ 95% Accuracy
5/8"	1/2 to 20 US gpm 0.11 to 4.55 m³/h	1 to 20 US gpm 0.23 to 4.5 m³/h	1/8 US gpm 0.03 m³/h
3/4"	3/4 to 30 US gpm 0.17 to 6.82 m³/h	2 to 30 US gpm 0.45 to 6.8 m³/h	1/4 US gpm 0.06 m³/h
1"	1 to 50 US gpm 0.23 to 11.36 m³/h	3 to 50 US gpm 0.68 to 11.4 m³/h	3/8 US gpm 0.09 m³/h

REGISTRATION:

Pro Read Registration (per sweep hand revolution)		5/8"	3/4" & 1"
10	US Gallons	√	√
10	Imperial Gallons	√	√
1	Cubic Foot	√	√
0.1	Cubic Metre	√	√
0.01	Cubic Metre	√	

Register Capacity ProRead & E-Coder		5/8"	3/4" & 1"
10,000,000	US Gallons	√	√
10,000,000	Imperial Gallons	√	√
1,000,000	Cubic Feet	√	√
100,000	Cubic Metres	√	√
10,000	Cubic Metres	√	

E-Coder High Resolution (8-digit reading)		5/8"	3/4" & 1"
0.1	US Gallons	√	√
0.1	Imperial Gallons	√	√
0.01	Cubic Feet	√	√
0.001	Cubic Metres	√	√

SPECIFICATIONS

- Certification: NSF/ANSI 61 certified, Annex F and Annex G compliant
- Application: Cold water measurement of flow in one direction in residential service applications
- Maximum operating water pressure: 150 psi (1034 kPa)
- Maximum operating water temperature: 80°F
- Measuring chamber: Nutating disc technology design made from proprietary synthetic polymer

OPTIONS

- Sizes:
  - 5/8", 5/8" x 3/4"
  - 3/4", 3/4" SL, 3/4" x 1"
  - 1", 1" x 1 1/4"
- Units of measure: U.S. gallons, imperial gallons, cubic feet, cubic metres
- Register types:
  - Direct reading: Bronze box and cover (standard)
  - Remote reading: ProRead Encoder, E-Coder, E-Coder)R900*i*, TRICON/S, TRICON/E3
  - Reclaim
- Bottom caps:
  - Synthetic polymer (5/8" only)
  - Cast iron
  - Lead free high copper alloy
- Connections:
  - Lead free high copper alloy, straight or bent
- Environmental conditions:
  - Operating temperature: 33° F to 149° F (0° C to 65° C)
  - Storage temperature: 33° F to 158° F (0° C to 70° C)

Neptune Technology Group Inc.
1600 Alabama Highway 229
Tallassee, AL 36078
USA
Tel: (800) 645-1892
Fax: (334) 283-7293

Neptune Technology Group (Canada) Ltd.
7275 West Credit Avenue
Mississauga, Ontario
L5N 5M9
Canada
Tel: (905) 858-4211
Fax: (905) 858-0428

Neptune Technology Group Inc.
Ejército Nacional No. 418
Piso 12, Desp. 1201-1202
Col. Chapultepec Morales
Delegación Miguel Hidalgo
11570 México, Distrito Federal
Tel: (525) 55203 5294 / (525) 55203 5708
Fax: (525) 55203 6503

NEPTUNE TECHNOLOGY GROUP

neptunetg.com

PS T10 SMALL 05.11 © Copyright 2011, Neptune Technology Group Inc. Neptune is a registered trademark of Neptune Technology Group Inc.

Neptune engages in ongoing research and development to improve and enhance its products. Therefore, Neptune reserves the right to change product or system specifications without notice.

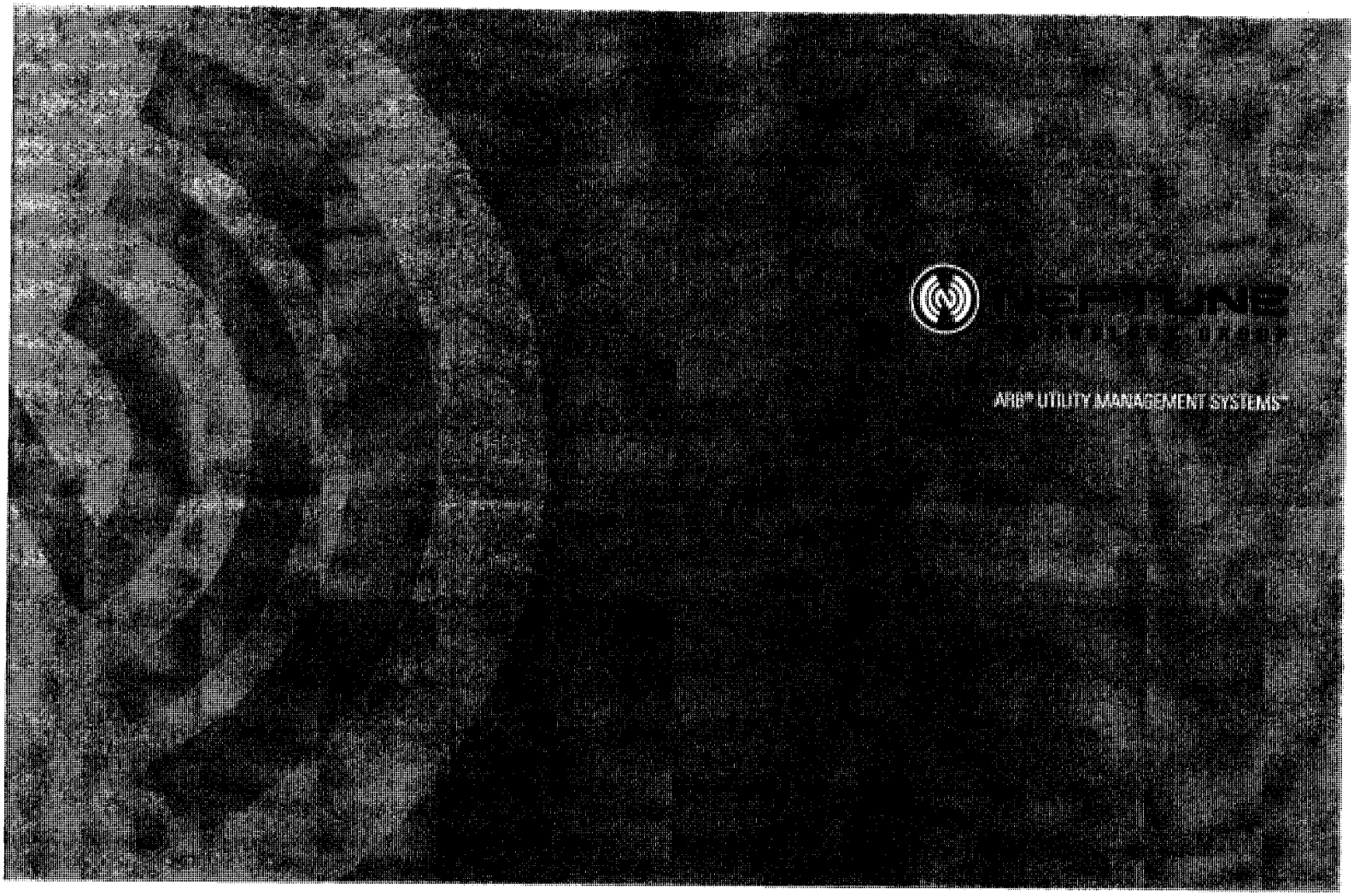

T-10 Parts List

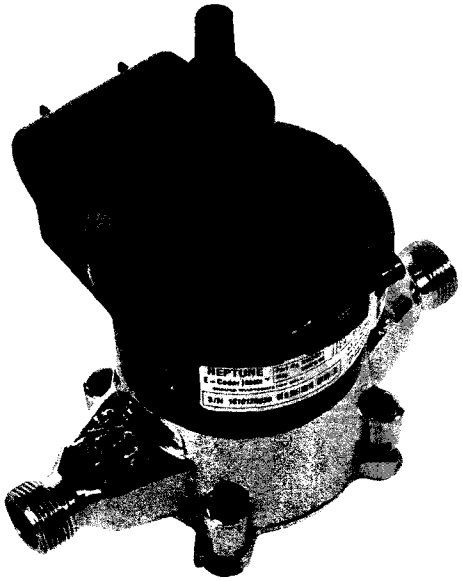

T-10 PARTS LIST

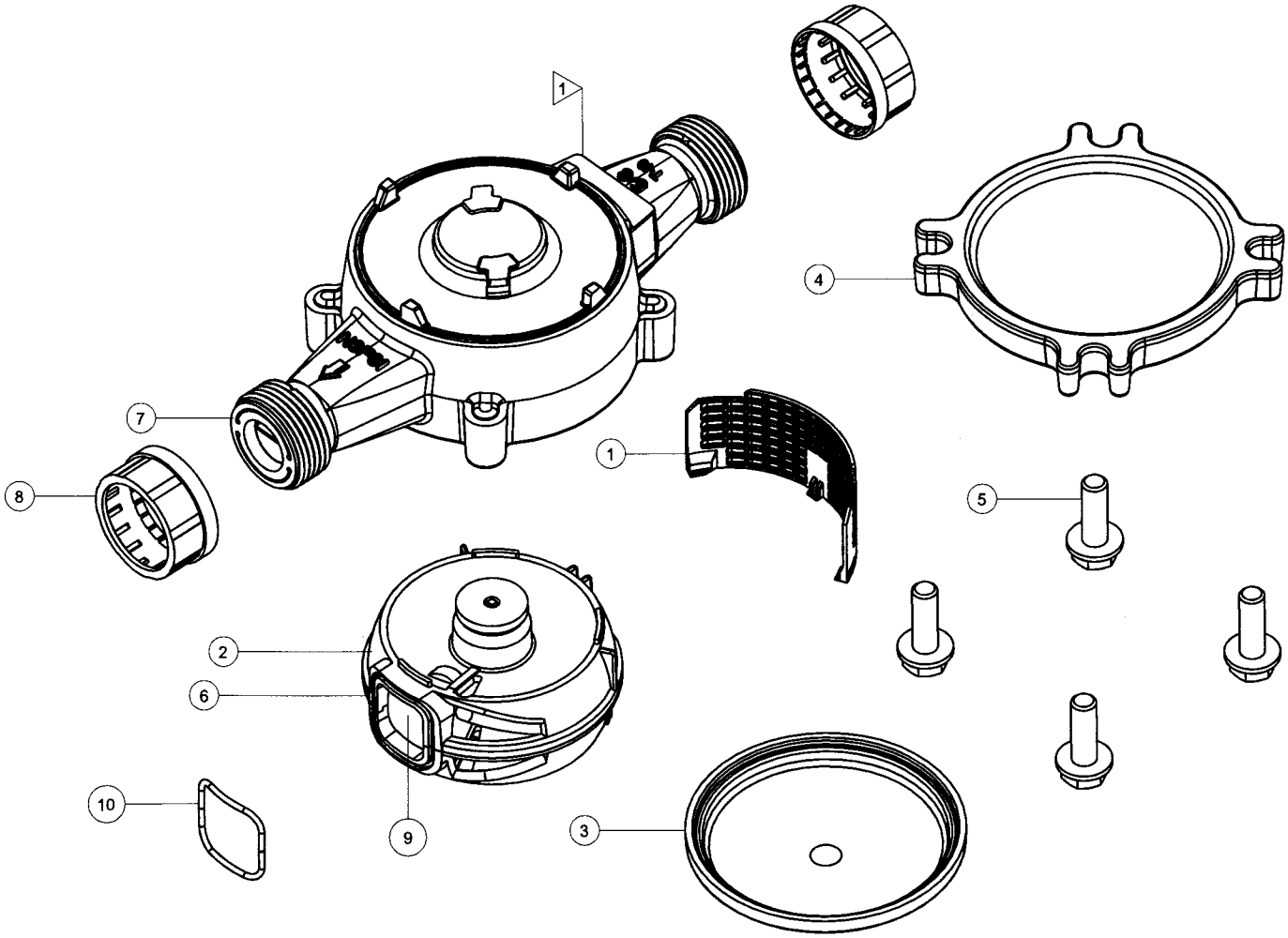

1 **T-10 PRODUCED JULY 2011 AND BEYOND**

* T-10 has serial number pad on the inlet side
* Date code is cast on the bottom of the inlet and outlet port

ITEM NO.	DESCRIPTION	PART NUMBER
		5/8", 5/8" X 3/4"
	Register	
1	Strainer	9399-006
2	Chamber complete[1]	9400-900
3	Gasket/Liner, Bottom Cap[2]	8340-072
4	Bottom Cap, Plastic[3]	9397-503
	Bronze[4]	9397-124
	Cast Iron[5]	9397-012
5	Bolt and Washer	
	SST-302 (w/washer)	8353-106
	SST-316 (w/washer)	8353-105
6	Thrust Roller	81-500
7	Spud Plug	1787-101
8	Spud Cap Plastic	1788-008
9	Diaphragm	9391-001
10	O-Ring	9386-004

T-10 PRODUCED JULY 2011 AND BEYOND

[1] Chamber has fully open outlet port (see picture on page 2)
[2] Liner/gasket is white in color
[3] Plastic bottom cap has a raised Neptune logo
[4] Bronze bottom cap has a raised Neptune logo
[5] Cast iron bottom cap has a recessed Neptune logo

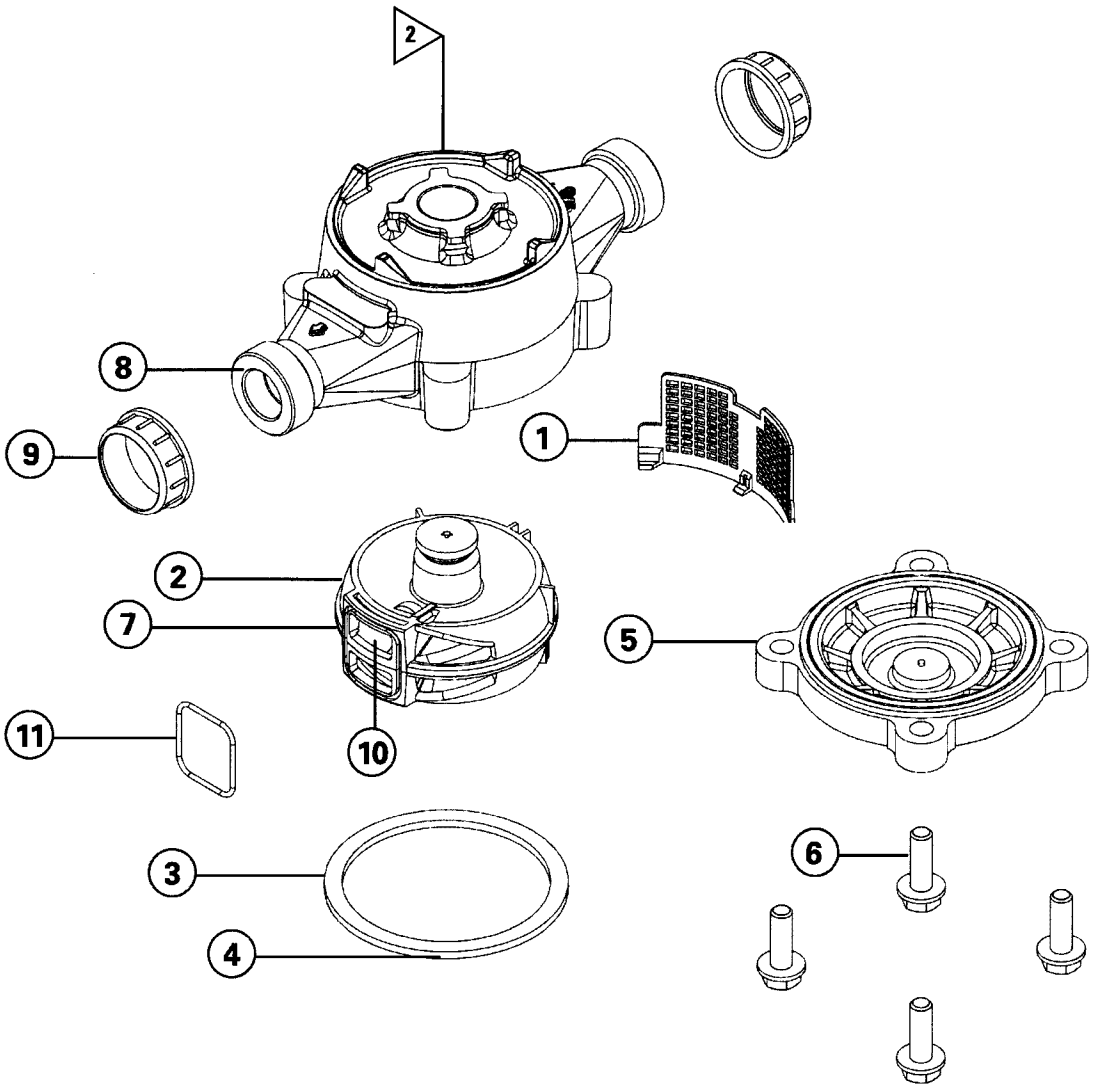

2 **T-10 PRODUCED PRIOR TO JULY 2011**

* T-10 has serial number pad on the outlet side
* Date code is cast on the bayonet area under the register

ITEM NO.	DESCRIPTION	PART NUMBER		
		5/8", 5/8" X 3/4" *	3/4"	1"
	Register			
1	Strainer	9399-005	9831-001	9381-002
2	Chamber Complete[1]	9400-605	9826-200	9826-300
3	Gasket, Bottom Cap[2]	8340-028	8340-034	8340-038
4	Liner, Bottom Cap[3]	9398-001	9832-001	9841-001
5	Bottom Cap, Plastic[4]	9397-501		
	Bronze[5]	9397-023	9833-024	9842-024
	Cast Iron[6]	9397-010	9833-010	9842-010
6	Bolt and Washer			
	SST-302 (w/washer)	8353-106	8353-106	8353-106
	SST-316 (w/washer)	8353-105	8353-105	8353-105
7	Thrust Roller	81-500	81-500	190-500
8	Spud Plug	1787-101	1787-101	1787-102
9	Spud Cap Plastic	1788-008	1789-008	1790-007
10	Diaphragm	9391-001	9829-001	9840-001
11	O-Ring	9386-001	9386-002	9386-003

*** T-10 PRODUCED PRIOR TO JULY 2011**

[1] Chamber is jointed in the middle of the outlet port (see picture on page 4)
[2] T-10 uses black gasket
[3] Not required with SP or bronze bottom caps
[4] T-10 plastic bottom cap has a Trident logo raised on the center
[5] T-10 bronze bottom cap has a recessed Neptune logo or no logo visible
[6] T-10 cast iron bottom cap has no logo

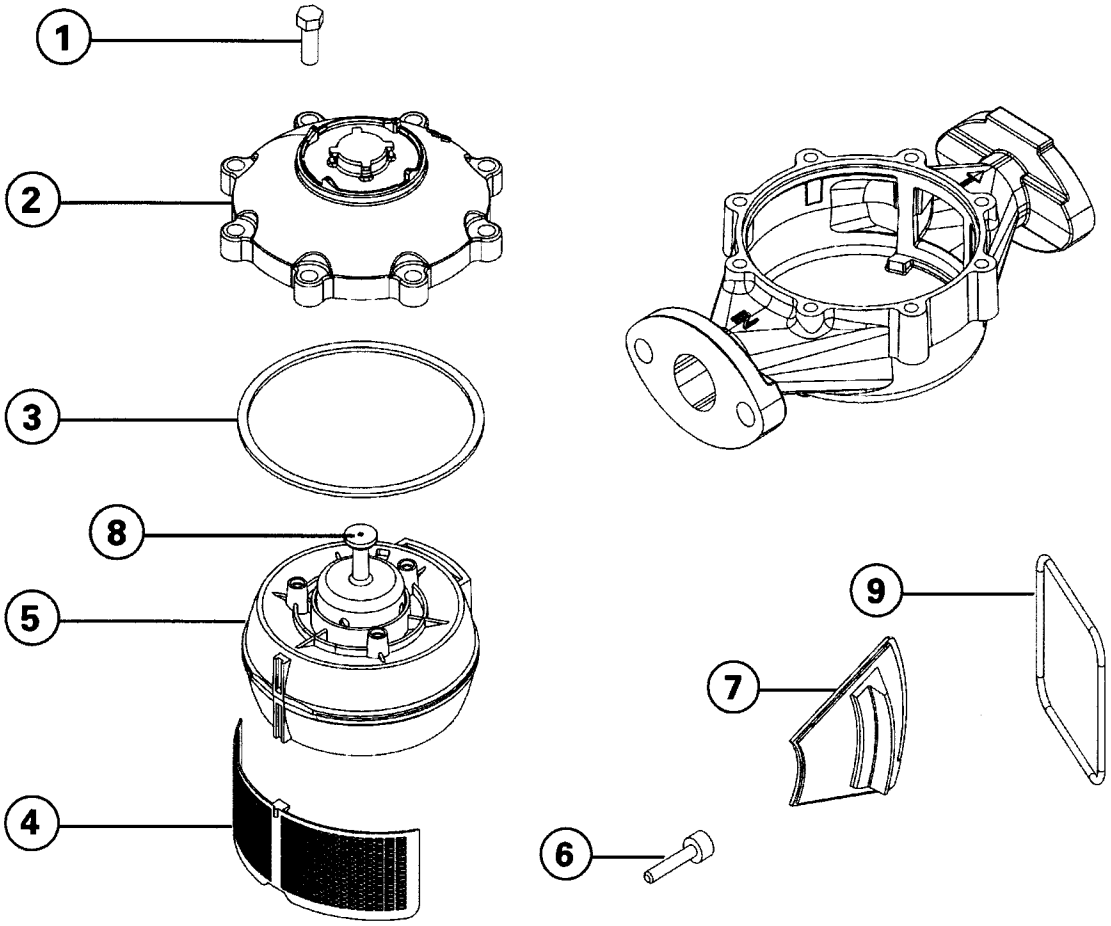

ITEM NO.	DESCRIPTION	PART NUMBER	
		SP CHAMBER	
		1 ½"	2"
1	Bolts	8307-051	8307-051
2	Cover, Maincase	9082-002	9080-002
3	Gasket, Maincase	9083-001	9083-002
4	Strainer	9084-001	9084-002
5	Chamber Complete	9098-600	9098-610
6	Thrust Roller	9850-100	9850-100
7	Diaphragm	9086-101	9086-102
8	Control Block Assembly	9097-000	9097-010
9	O-Ring	8316-607	8316-606

ROLL-SEALED REGISTER ASSEMBLIES

REGISTRATION	⅝"	¾"	1"	1½"	2"
Cu. Ft.	9107-012	9107-022	9107-032	9107-042	9107-052
Gal.	9107-011	9107-021	9107-031	9107-041	9107-051
M^3	9107-013	9107-023	9107-033	9107-043	9107-053

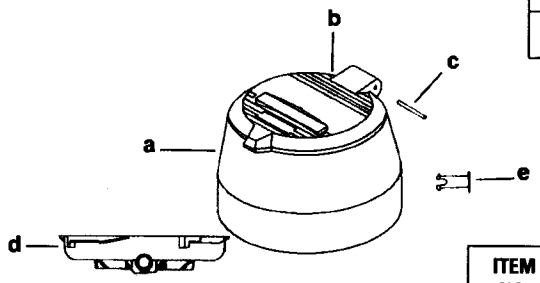

REGISTER BOX PARTS

ITEM NO.	GOLD DESCRIPTION	BRONZE	PLASTIC	COLOR
	Register Box Assembled	9131-100	9131-000	
a	Register Box (Brz Box & Lid only)	9133-202	9133-001	
b	Register Cover	N/A	9132-001	
c	Hinge Pin, Register	N/A	8350-007	
d	Retainer Ring	9105-001	9105-001	
	Seal Pin, D/R Register, ProRead Register	9106-002	9106-001	9106-002
e	Seal Pin, High Profile Reg Box		9309-501	
	Screw, Seal Wire Register	8460-011		
	Seal Pin, Old Direct Read	9309-501		

REGISTER ASSEMBLIES

SIZE	REGISTRATION	DIRECT READ	PROREAD* INSIDE 4-WHEEL ENCODER	PROREAD* INSIDE 6-WHEEL ENCODER	PROREAD* PIT 4-WHEEL ENCODER	PROREAD* PIT 6-WHEEL ENCODER	E-CODER INSIDE	E-CODER PIT	R900*i* INSIDE	R900*i* PIT
⅝"	Cu. Ft.	R82F11	R62F11	R62F12	R72F11	R72F12	RE2F11	RH2F11	RD2F11	RW2F11
	Gal.	R82G11	R62G11	R62G12	R72G11	R72G12	RE2G11	RH2G11	RD2G11	RW2G11
	m^3	R82M11	R62M11	R82M12	R72M11	R72M12	RE2M11	RH2M11	RD2M11	R22M11
¾"	Cu. Ft.	R82F21	R62F21	R62F22	R72F21	R72F22	RE2F21	RH2F21	RD2F21	RW2F21
	Gal.	R82G21	R62G21	R62G22	R72G21	R72G22	RE2G21	RH2G21	RD2G21	RW2G21
	m^3	R82M21	R62M21	R62M22	R72M21	R72M22	RE2M21	RH2M21	RD2M21	RW2M21
1"	Cu. Ft.	R82F31	R62F31	R62F32	R72F31	R72F32	RE2F31	RH2F31	RD2F31	RW2F31
	Gal.	R82G31	R62G31	R62G32	R72G31	R72G32	RE2G31	RH2G31	RD2G31	RW2G31
	m^3	R82M31	R62M31	R62M32	R72M31	R72M32	RE2M31	RH2M31	RD2M31	RW2M31
1½"	Cu. Ft.	R82F42	R62F41	R62F42	R72F41	R72F42	RE2F41	RH2F41	RD2F41	RW2F41
	Gal.	R82G42	R62G41	R62G42	R72G41	R72G42	RE2G41	RH2G41	RD2G41	RW2G41
	m^3	R82M42	R62M41	R62M42	R72M41	R72M42	RE2M41	RH2M41	RD2M41	RW2M41
2"	Cu. Ft.	R82F52	R62F51	R62F52	R72F51	R72F52	RE2F51	RH2F51	RD2F51	RW2F51
	Gal.	R82G52	R62G51	R62G52	R72G51	R72G52	RE2G51	RH2G51	RD2G51	RW2G51
	m^3	R82M52	R62M51	R62M52	R72M51	R72M52	RE2M51	RH2M51	RD2M51	RW2M51

** Registers do not include ARB®V remote receptacles. When ordering 1" registers for 10 Cu.Ft. registration, add SA68.*

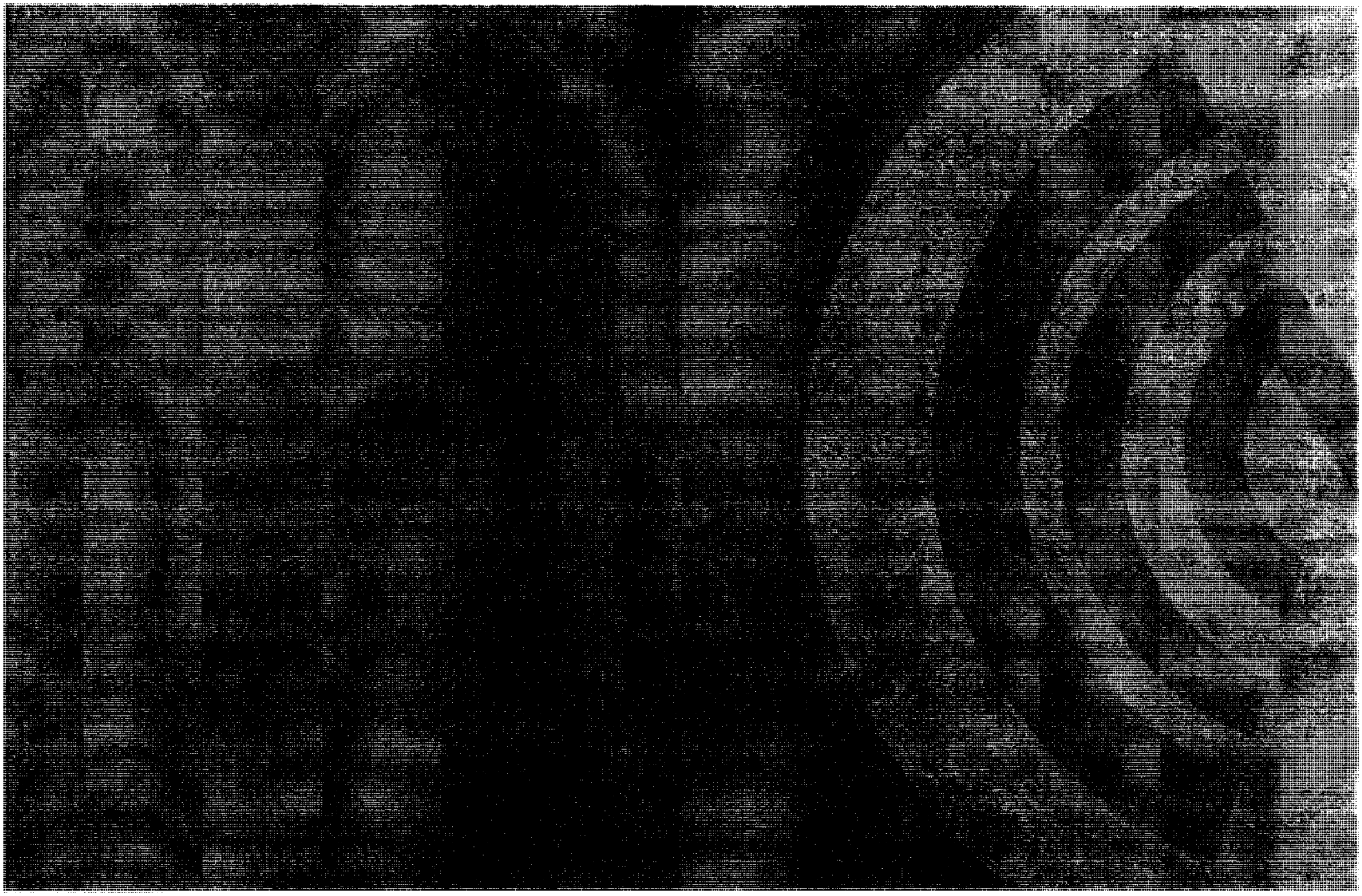

Neptune Technology Group Inc.
1600 Alabama Highway 229
Tallassee, AL 36078
USA
Tel: (800) 645-1892
Fax: (334) 283-7293

Neptune Technology Group (Canada) Ltd.
7275 West Credit Avenue
Mississauga, Ontario
L5N 5M9
Canada
Tel: (905) 858-4211
Fax: (905) 858-0428

Neptune Technology Group Inc.
Ejército Nacional No. 418
Piso 12, Desp. 1201-1202
Col. Chapultepec Morales
Delegación Miguel Hidalgo
11570 México, Distrito Federal
Tel: (525) 55203 5294 / (525) 55203 5708
Fax: (525) 55203 6503

NEPTUNE
TECHNOLOGY GROUP
neptunetg.com

PL T10 07.11 © Copyright 2011, Neptune Technology Group Inc. Neptune is a registered trademark of Neptune Technology Group Inc.

ARB® UTILITY MANAGEMENT SYSTEMS™

NEPTUNE TECHNOLOGY GROUP

TRIMBLE NOMAD HANDHELD DATA COLLECTOR

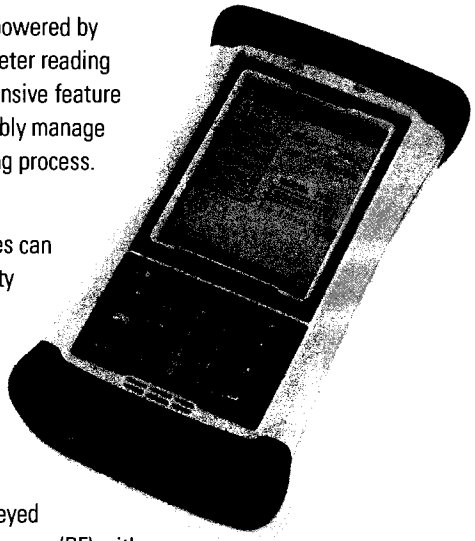

The Trimble Nomad (Nomad), powered by Neptune's N_SIGHT™ R900® meter reading software, provides a comprehensive feature set that allows utilities to reliably manage and automate the meter reading process.

With Neptune's ARB® Utility Management Systems™, utilities can read their meters using a variety of data collection technologies – walk-by, mobile, or fixed network. The Nomad is just one component of Neptune's meter reading approach, allowing the meter reader to collect readings manually (keyed entry), probed, or via radio frequency (RF) with the R900® Belt Clip Receiver (BCR). Regardless of the method, the Nomad offers the capability to reliably collect and store meter readings throughout the entire work day.

The Nomad is loaded with meter reading routes through an Ethernet communication/charging cradle using Neptune's meter reading software or via USB with Windows Mobile Device Center. Communication/charging cradles are connected directly to a PC, a server supporting multiple computers, or the utility's LAN. Any meter reading data on the handheld is backed up to the Nomad's SD card until the unload process is completed. To unload meter reading data, the Nomad is inserted into the cradle at the office. Data is downloaded to the meter reading software and prepared for transfer to the billing system. The Nomad remains in the cradle to recharge so it is ready for work the next day.

For RF capabilities, the Nomad is paired via Bluetooth with the R900 BCR. The R900 BCR is Neptune's latest walk-by meter reading receiver and contains the latest in software defined radio (SDR) technology. Historically, receivers were integrated into the handheld; but with a separate belt clip device, the capabilities of the receiver are increased. In fact, the R900 BCR has a 50-channel receiver capable of processing eight readings simultaneously and 70 readings per second. This receiver is fully compatible with Neptune's R900 MIU as well as Advantage and Pocket ProReader probe devices. For more information please refer to the R900 BCR product sheet.

The Nomad is available in two models – the 900B (B) and the 900LE (LE). The B version is perfect for utilities that only want to utilize the handheld for meter reading purposes and pair via Bluetooth with the R900 BCR. The LE version is for those utilities who want additional advanced hardware features such as a third-party work order system or field geocoding. To support the requirements of these work order systems, the LE provides camera, GPS, and barcode

KEY FEATURES

- AMR capable – fully compatible with the R900 Belt Clip Receiver
- SD card backup of meter reading data
- Integrated GPS, barcode scanner, and 5MP camera*
- High-resolution, sunlight-readable VGA display with LED backlighting
- Designed for extreme durability – complies with IP68 & MIL-STD-810F
- Replaceable long-life lithium ion battery – 10+ hours on a single charge

KEY BENEFITS

- Reduces meter reading time and increases productivity when paired with R900 Belt Clip Receiver
- Supports multiple data collection methods – manual keyed entry, probed, and walk-by RF
- Supports full work day with high-capacity battery
- Fully capable of operations in harsh environmental conditions
- Hardware support for multiple utility functions such as meter reading and work orders*

**Requires 900LE model.*

SPECIFICATIONS

Operating System	Windows Mobile 6.1
Software Application	N_SIGHT R900 (version 4.5 or later)
Processor	Marvell PXA320 806MHz
Memory	128 MB DDR SDRAM, 1GB Flash (900LE) & 512MB Flash (900B)
Display	Sunlight-readable 480 x 640 pixel (VGA) 16-bit color TFT with LED backlighting
Keyboard	Physical numeric On-screen alpha-numeric keypad accessible via touchscreen
Power Supply	Rechargeable lithium ion battery pack – 5000 mAh capacity Intelligent fast charge system (4-6 hours) Power management system Integrated charge status and low battery indicator Typical 10+ hour work day
Communication	WiFi (CCX v4 ASD) (802.11 b/g) Bluetooth 2.0 + EDR
Audio	Integrated speaker and microphone
AMR RF Receiver	Compatible via Bluetooth with R900 Belt Clip Receiver
Dimensions	Height: 1.96" (5 cm) Width: 3.92" (10 cm) Length: 6.92" (17.6 cm)
Weight	1.3 lbs. (596g) including rechargeable battery
Temperature Range	Operating: -22°F to +140°F (-30°C to +60°C) Storage: -40°F to +158°F (-40°C to +70°C) Humidity: 90% RH temp cycle 32°/+158°F (0°C/+70°C)
Environmental	Meets or Exceeds: Water: MIL-STD-810F, Method 510.3, Procedure I, IEC-529, IP68 Sand & Dust: MIL-STD-810F, Method 510.3, Procedure I, II, IEC-529, IP68 Drop: MIL-STD-810F, Method 516.5, Procedure IV Vibration: MIL-STD-810F, Method 514.5, Procedure I, II Operating and Storage Temperature: MIL-STD-810F, Method 501.4 – Procedure I, II, Method 502.4 – Procedure I, II, III Temperature Shock: MIL-STD-810F, Method 503.4, Procedure I Humidity: MIL-STD-810F, Method 507.4 Altitude: MIL-STD-810F, Method 500.5, Procedure I, II, III
Approvals	FCC, CE/R & TTE, IC (Canada), RoHS Compliant, PTCRB, Section 508 compliant, CCX v4 ASD, MIL-STD-461E RE102, MIL-STD-461E RS103
Accessories	Ethernet communications and charging cradle Spare battery charger Hand strap AC power adapter Anti-glare screen protector Replacement lithium ion battery Stylus
Warranty	Two-year comprehensive warranty Hardware and software maintenance contracts available

scanner capabilities. Both versions come with a Marvell 806 MHz processor to maximize field performance.

One of the most important requirements of a meter reading handheld is that the battery should last a full work day. The Nomad can do that and then some with its high-capacity 5000mAh battery capable of performing for 10+ hours even in cold weather conditions. During such a length of time in an outdoor environment, it's no surprise that the Nomad must be able to withstand harsh conditions. The Nomad meets rigorous MIL-STD-810F military standards for impact, vibration, humidity, altitude, and extreme temperatures. It also comes with an IP68 rating which means that the handheld is completely sealed against dust and can survive immersion in up to a meter of water for four hours.

To add even more value to the Nomad's high-value package, Neptune is offering the new Nomad with a two (2) year comprehensive warranty.

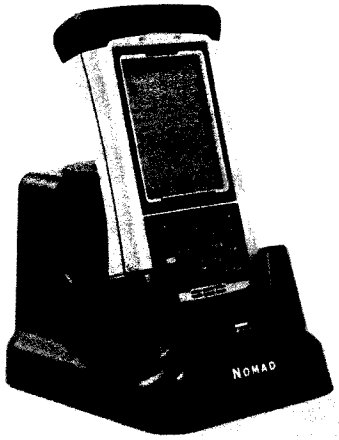

Trimble Nomad with charging cradle.

Neptune Technology Group Inc.
1600 Alabama Highway 229
Tallassee, AL 36078
USA
Tel: (800) 633-8754
Fax: (334) 283-7293

Neptune Technology Group (Canada) Ltd.
7275 West Credit Avenue
Mississauga, Ontario
L5N 5M9
Canada
Tel: (905) 858-4211
Fax: (905) 858-0428

Neptune Technology Group Inc.
Ejército Nacional No. 418
Piso 12, Desp. 1201-1202
Col. Chapultepec Morales
Delegación Miguel Hidalgo
11570 México, Distrito Federal
Tel: (525) 55203 5294 / (525) 55203 5708
Fax: (525) 55203 6503

NEPTUNE TECHNOLOGY GROUP

neptunetg.com

PS TRIMBLE NOMAD 04.13 © Copyright 2013, Neptune Technology Group Inc. Neptune is a registered trademark of Neptune Technology Group Inc.

Neptune engages in ongoing research and development to improve and enhance its products. Therefore, Neptune reserves the right to change product or system specifications without notice.

ARB® UTILITY MANAGEMENT SYSTEMS™

NEPTUNE TECHNOLOGY GROUP

TRIMBLE RANGER 3XE HANDHELD DATA COLLECTOR

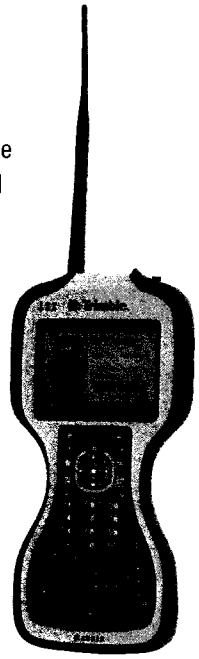

STREAMLINE AND AUTOMATE WATER MEASUREMENT

When you work with Neptune's R900® System, you'll streamline and automate processes to help your workforce be more efficient in their jobs, saving your utility time and money. The Trimble Ranger 3XE's intuitive design reduces training time, and our automated features ensure that the data you collect is accurate and easy to share with other departments. And if you need it, you can count on our support staff to resolve issues quickly and efficiently. Neptune's systems provide the foundation that you can build on, turning data into meaningful information to improve accuracy, identify hidden causes of loss, and streamline operations.

PROTECT ASSETS WHILE ADOPTING NEW TECHNOLOGIES

Neptune has designed the R900 System to ensure that individual components work easily with past generations of equipment, and will work just as seamlessly with future innovations as your utility's needs evolve. For instance, the Trimble Ranger 3XE maintains support to read R900® MIUs through its internal HR2650i receiver. The Ranger lets you choose manual keyed entry, probed, and walk-by RF data collection methods at any time. The Ranger can also be paired via Bluetooth with the new R900® Belt Clip Transceiver (BCT). This enables features such as RF-activated data logging to extract 96 days' worth of hourly consumption data from the new enhanced R900 or E-Coder®)R900*i*™ for an individual account. You can phase in these and other new features and equipment at your own pace, confident that Neptune will support your future needs without leaving stranded assets.

ADDRESS CUSTOMER ISSUES AND IMPROVE SERVICE

With the Trimble Ranger 3XE and R900 BCT, access to the meter is not an issue, so your meter readers can quickly capture the information they need remotely. Your field personnel can now have AMI functionality in the palm of their hand, with immediate access to detailed interval data as well as flags for leaks, tamper, and reverse flow from E-Coder®-equipped meters. They can generate graphs of a customer's water consumption and show the customer on-screen exactly when excessive water usage occurred or when a probable continuous leak began. Seeing usage patterns and receiving alerts will help your utility proactively improve your customer service, heading off high bill complaints, reducing delinquent payments, and avoiding write-offs in the process.

KEY BENEFITS

- Increases Efficiency
  - Supports multiple data collection methods – manual keyed entry, probed, and walk-by RF
  - Integrated HR2650i receiver for easy transition to walk-by RF
  - Supports two-way communication to R900 when connected to R900 Belt Clip Transceiver (BCT)
- Protects your meter reading data
  - SD card backup
  - Meets MIL-STD-810G for impact, vibration, humidity, altitude, and extreme temperatures
  - Meets IP67 for protection against dust and water intrusion
- Analyze data at the source
  - View data logging graphs in the field to address high bill complaints
  - Identify high/low audit status failures
  - Receive leak, reverse flow, and days of no flow alerts from E-Coder-equipped meters

SPECIFICATIONS

- Operating System: Windows Mobile 6.5 Professional
- Software Application: N_SIGHT™ R900® (version 4.7 or later)
- Processor: TI AM3715 Sitara ARM Cortex-A8 processor at 800 MHz
- Memory: 256 MB RAM
- Display: 4.2 in (10.6 cm), 640 x 480 pixel, VGA TFT with LED backlighting
- Keyboard: QWERTY full keypad with number pad, directional buttons with 4 programmable buttons
- Power Supply
  - Rechargeable lithium ion battery pack – 11.1V, 2500 mAh, 27.8 Wh
  - Power management system
  - Integrated charge status and low battery indicator
  - Typical 10+ hour work day
- Communication
  - Bluetooth 2.0 + EDR
  - WiFi (802.11b/g)
- WWAN Radios
  - HSDPA, Tri-band
  - HSDPA/UMTS: 850/1900/2100 MHz, Quad-band
  - GSM/GPRS/EDGE
  - CDMA
- Audio: Integrated speaker and microphone
- AMR RF Receiver: HR2650i integrated receiver, Also compatible via Bluetooth with R900 Belt Clip Transceiver (BCT)
- Dimensions
  - Height: 1.9" (4.8 cm)
  - Width: 5.2" (13.1 cm)
  - Length: 10.5" (26.6 cm)
  - Weight: 2.3 lbs. (1.04 kg) including rechargeable battery and stylus
- Temperature Range
  - Operating: -22°F to +140°F (-30°C to +60°C)
  - Storage: -40°F to +158°F (-40°C to +70°C)
  - Humidity: 90% RH temp cycle -4°/+140°F (-20°C/+60°C)
- Environmental
  Meets or exceeds:
  - Water: IEC-529, IP67
  - Sand & Dust: IEC-529, IP67
  - Drop: MIL-STD-810G, Method 516.6, Procedure IV
  - Vibration: MIL-STD-810G, Method 514.6, Procedure I, II
  - Operating and Storage Temperature: MIL-STD-810G, Method 501.5 – Procedure I, II, Method 502.5 – Procedure I, II, III
  - Temperature Shock: MIL-STD-810G, Method 503.5, Procedure I
  - Humidity: MIL-STD-810G, Method 507.5
  - Altitude: MIL-STD-810G, Method 500.5, Procedure I, II, III
- Approvals
  - FCC, CE, R&TTE, IC (Canada), C-tick, GCF compliant, RoHS compliant, Section 508 compliant, AT&T certified, WiFi Alliance certified, MIL-STD-810G, IP67, MIL-STD-461
- Accessories
  - Ethernet communications and charging cradle
  - Replacement lithium-ion battery
  - Hand strap
  - AC power adapter
  - Anti-glare screen protector
  - Stylus
- Warranty
  - Two year comprehensive warranty
  - Hardware and software maintenance contracts available

Neptune Technology Group Inc.
1600 Alabama Highway 229
Tallassee, AL 36078
USA
Tel: (800) 633-8754
Fax: (334) 283-7293

Neptune Technology Group (Canada) Ltd.
7275 West Credit Avenue
Mississauga, Ontario
L5N 5M9
Canada
Tel: (905) 858-4211
Fax: (905) 858-0428

Neptune Technology Group Inc.
Ejército Nacional No. 418
Piso 12, Desp. 1201-1202
Col. Chapultepec Morales
Delegación Miguel Hidalgo
11570 México, Distrito Federal
Tel: (525) 55203 5294 / (525) 55203 5708
Fax: (525) 55203 6503

NEPTUNE TECHNOLOGY GROUP
neptunetg.com

PS TRIMBLE RANGER 09.14 © Copyright 2014, Neptune Technology Group Inc. Neptune is a registered trademark of Neptune Technology Group Inc.

Neptune engages in ongoing research and development to improve and enhance its products. Therefore, Neptune reserves the right to change product or system specifications without notice.

AMR™ UTILITY MANAGEMENT SYSTEMS™

TRU/FLO® Compound Parts List

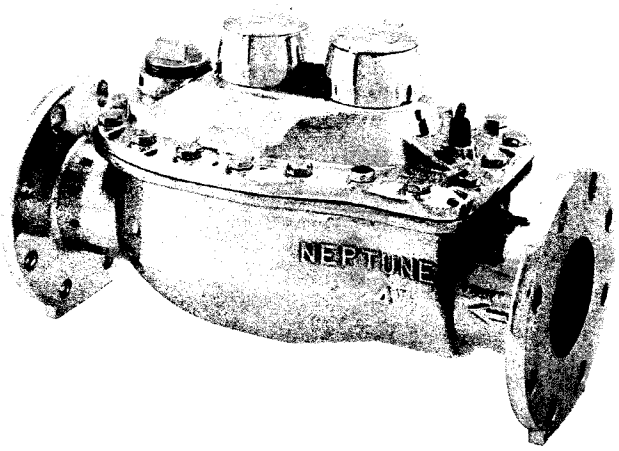

TRU/FLO COMPOUND PARTS LIST

ITEM	DESCRIPTIDN	METER SIZE & PART NUMBERS		
		3"	4"	6"
1	Cover Assembly	9409-003	9565-100	9566-100
2	Maincase Gasket	8341-312	8341-313	8341-314
3	Maincase Gasket Kit	9685-001	9685-002	9685-003
4	Snap Ring	8579-033	8579-034	8579-036
5	Throttle Valve Assembly	9571-110	9571-200	9571-300
6	Main Valve Assembly	9403-120*	9403-121	9403-122
7	Main Valve Snap Ring	8579-305	8579-306	8579-307
8	O-Ring	8316-274	8316-276	8316-275
9	Pipe Plug	8315-027(2)	8315-028	8315-028
10	Bolt Cover	8329-405	8329-405	8329-421
11	Vent Screw	8394-003	8394-003	8394-003
12	Seal Wire with Lead Seal	41110-501	41110-501	41110-501
13	Seal Cap	11098-001	11098-001	11098-001
14	Calibration Nut	8545-417	8545-417	8545-417
15	O-Ring	8316-022	8316-022	8316-022
16	Calibration Vane Assembly	11097-600	11097-700	11097-800
17	T-10 Strainer	9399-002	9831-001	9831-002
18	T-10 Chamber	9400-600	9826-200	9826-300
19	Plate	9406-001	9406-002	9406-003
20	Screw	8305-042	8329-006	8329-114
21	Bolt	8329-007	8329-007	8329-206
22	Washer, Lock	8564-211	8564-211	8564-212
23	Drive Assembly	9485-006	9485-003	9485-008
24	Drive Sleeve	9484-008	9484-009	9484-010
25	Measuring Chamber Assembly	9439-001SP00	9439-002SP00	9439-106
26	Seal Ring	8340-063	8340-064	8340-065
27	Washer, Lock	8564-211	8564-211	8564-211

**This part is only available in a kit. P/N 9681-001*

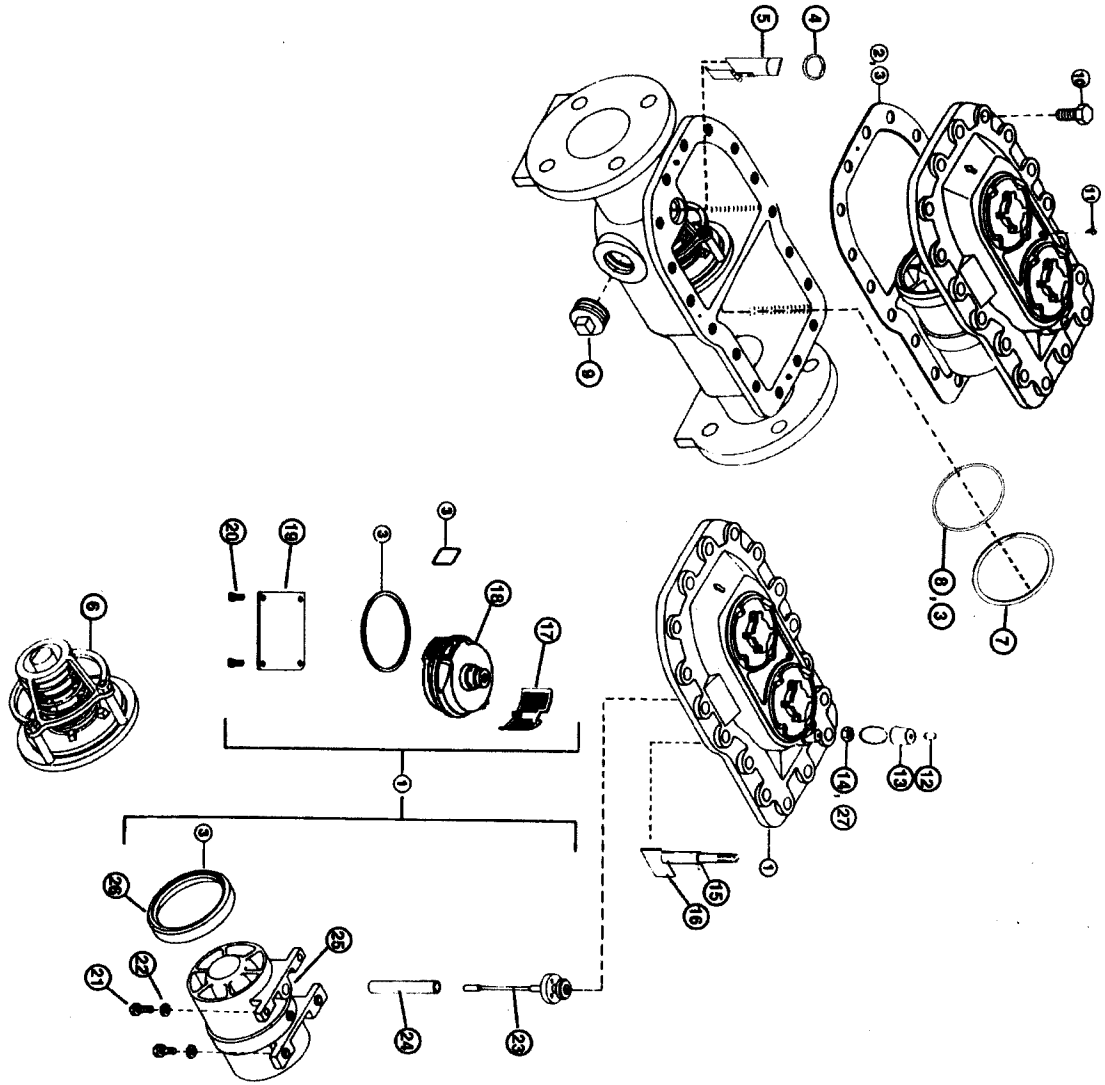

1
2,3
4
5
6
7
8,3
9
10
11
12
13
14,27
15
16
17
18
19
20
21
22
23
24
25
26

ITEM	DESCRIPTION	METER SIZE & PART NUMBER
		2" HP
1	Cover Assembly	9676-100
2	Maincase Gasket	9675-001
3a	Throttle Valve Door	9679-001
3b	Throttle Valve Seat	9680-001
4	Main Valve Assembly	9669-000
5	Screw, Retainer	8328-045
6	Retainer Ring	9674-001
7	O-Ring, Retainer	8316-041
8	Strainer	9855-001
9	Locking Ring	9856-001
10	Pipe Plug	8315-027(2)
11	Bolt, Cover	8329-213
12	Spirol Pin	8350-008
13	Vent Screw	8394-003
14	Seal Wire with Lead Seal	41110-501
15	Seal Cap	11098-001
16	Calibration Nut	8545-417
17	O-Ring	8316-022
18	Calibration Vane Assembly	11097-610
19	Maincase Gasket Kit	9685-004
20	T-10 Chamber	9400-600
21	T-10 Strainer	9399-002
22	Drive Assembly	9485-011
23	Drive Sleeve	9484-013
24	2" HPT Strainer	9399-003
25	Chamber Plate	9678-001
26	Screw	8396-007
27	Measuring Assembly	9861-000
28	Bolt	8305-042
29	Washer, Lock	8654-210
30	Seal Ring	8340-062
31	Washer, Lock	8654-211

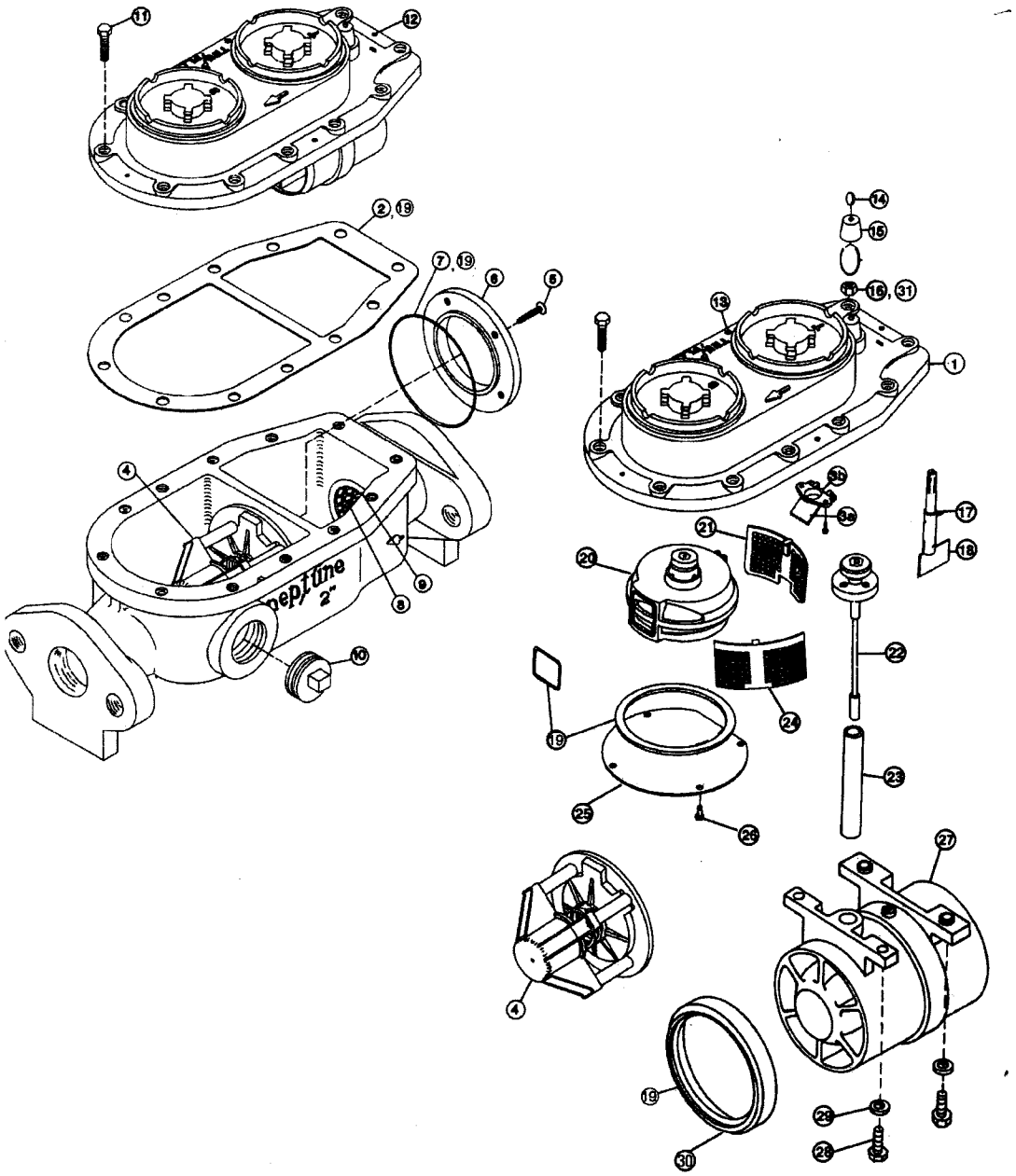
11
12
2, 19
7, 19
6
5
4
9
8
10
14
15
16, 31
13
1
3b
3a
17
18
21
20
22
24
19
23
25
26
27
4
19
30
29
28

(UME INCLUDES: TWO REGISTERS, GASKET, AND COVER ASSEMBLY)

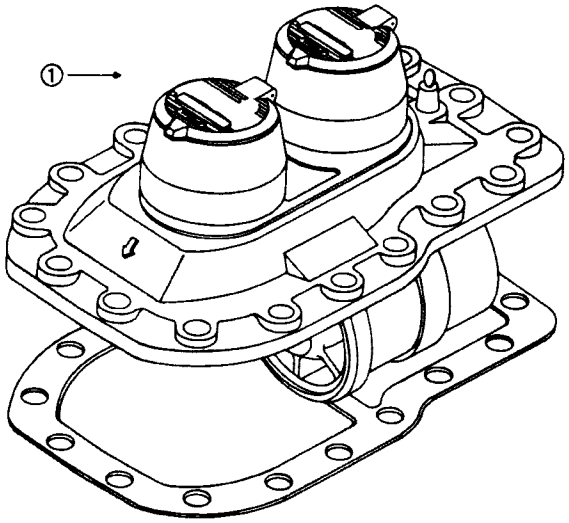

SIZE	REGISTRATION	(1) DIRECT READ		
		DISC REGISTER	TURBINE REGISTER	UME
2" HP	Cu. Ft.	R82F12	R85F1	9730-010
	Gal.	R82G12	R85G1	9730-020
	M^3	R82M12	R85M1	9730-040
2"	Cu. Ft.	R82F12	R83F2	N/A
	Gal.	R82G12	R83G2	N/A
	M^3	R82M12	R83M2	N/A
3"	Cu. Ft.	R82F12	R83F2	9596-110
	Gal.	R82G12	R83G2	9596-120
	M^3	R82M12	R83M2	9596-140
4" w/T-8 Register	Cu. Ft.	R81F22	R83F3	N/A
	Gal.	R81G22	R83G3	N/A
	M^3	R81M22	R83M3	N/A
6" w/T-8 Register	Cu. Ft.	R81F32	R83F4	N/A
	Gal.	R81G32	R83G4	N/A
	M^3	R81M32	R83M4	N/A
4" w/T-10 Register	Cu. Ft.	R82F22	R83F3	9596-210
	Gal.	R82G22	R83G3	9596-220
	M^3	R82M22	R83M3	9596-240
6" w/T-10 Register	Cu. Ft.	R82F32	R83F4	9596-310
	Gal.	R82G32	R83G4	9596-320
	M^3	R82M32	R83M4	9596-340

Note: When ordering registers, please include change gear combination or four-digit register code from dial face.

(UME INCLUDES: TWO REGISTERS, GASKET, AND COVER ASSEMBLY)

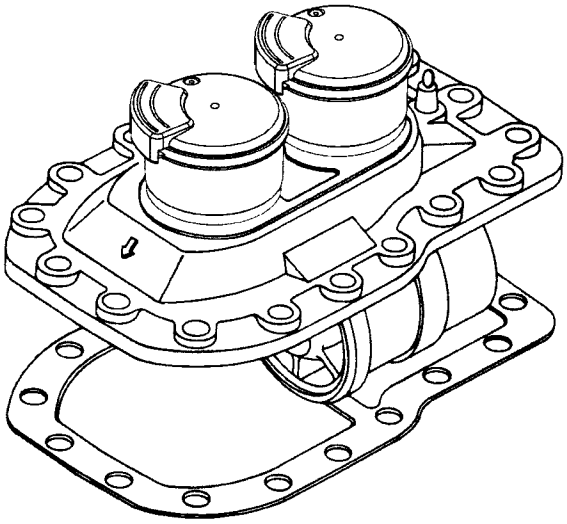

SIZE	REGISTRATIDN	ProRead™ (Pit) 4-Wheel Encoder*			ProRead™ (Pit) 6-Wheel Encoder*			E-Coder® (Pit)			E-Coder®)R900*i*™ (Pit)		
		DISC	TURBINE		DISC	TURBINE		DISC	TURBINE		DISC	TURBINE	
		REGISTER	REGISTER	UME	REGISTER	REGISTER	UME	REGISTER	REGISTER	UME	REGISTER	REGISTER	UME
2" HP	Cu. Ft.	R78F11	R75F11	9730-018	R78F12	R75F12	9730-019	RH8F11	RH5F11	9730-011	RW8F11	RW5F11	9730-050
	Gal.	R78G11	R75G11	9730-028	R78G12	R75G12	9730-029	RH8G11	RH5G11	9730-021	RW8G11	RW5G11	9730-060
	M^3.	R78M11	R75M11	9730-048	R78M12	R75M12	9730-049	RH8M11	RH5M11	9730-041	RW8M11	RW5M11	9730-080
2"	Cu. Ft.	R72F11	R73F11	N/A	R72F12	R73F12	N/A	RH8F11	RH3F11	N/A	RW8F11	RW3F11	N/A
	Gal.	R72G11	R73G11	N/A	R72G12	R73G12	N/A	RH8G11	RH3G11	N/A	RW8G11	RW3G11	N/A
	M^3.	R72M11	R73M11	N/A	R72M12	R73M12	N/A	RH8M11	RH3M11	N/A	RW8M11	RW3M11	N/A
3"	Cu. Ft.	R78F11	R73F21	9596-111	R78F12	R73F22	9596-118	RH8F11	RH3F21	9596-119	RW8F11	RW3F21	9596-150
	Gal.	R78G11	R73G21	9596-121	R78G12	R73G22	9596-128	RH8G11	RH3G21	9596-129	RW8G11	RW3G21	9596-160
	M^3.	R78M11	R73M21	9596-141	R78M12	R73M22	9595-148	RH8M11	RH3M21	9596-149	RW8M11	RW3M21	9596-180
4" w/T8 Register	Cu. Ft.	R71F21	R73F31	N/A	R71F22	R73F32	N/A	RH1F21	RH3F31	N/A	RW1F21	RW3F31	N/A
	Gal.	R71G21	R73G31	N/A	R71G22	R73G32	N/A	RH1G21	RH3G31	N/A	RW1G21	RW3G31	N/A
	M^3.	R71M21	R73M31	N/A	R71M22	R73M32	N/A	RH1M21	RH3M31	N/A	RW1M21	RW3M31	N/A
6" w/T8 Register	Cu. Ft.	R71F31	R73F41	N/A	R71F32	R73F42	N/A	RH1F31	RH3F41	N/A	RW1F31	RW3F41	N/A
	Gal.	R71G31	R73G41	N/A	R71G32	R73G42	N/A	RH1G31	RH3G41	N/A	RW1G31	RW3G41	N/A
	M^3.	R71M31	R73M41	N/A	R71M32	R73M42	N/A	RH1M31	RH3M41	N/A	RW1M31	RW3M41	N/A
4" w/T10 Register	Cu. Ft.	R78F21	R73F31	9596-211	R78F22	R73F32	9596-218	RH8F21	RH3F31	9596-219	RW8F21	RW3F31	9596-250
	Gal.	R78G21	R73G31	9596-221	R78G22	R73G32	9596-228	RH8G21	RH3G31	9596-229	RW8G21	RW3G31	9596-260
	M^3.	R78M21	R73M31	9596-241	R78M22	R73M32	9596-248	RH8M21	RH3M31	9596-249	RW8M21	RW3M31	9596-280
6" w/T10 Register	Cu. Ft.	R78F31	R73F41	9596-311	R78F32	R73F42	9596-318	RH8F31	RH3F41	9596-319	RW8F31	RW3F41	9596-350
	Gal.	R78G31	R73G41	9596-321	R78G32	R73G42	9596-328	RH8G31	RH3G41	9596-329	RW8G31	RW3G41	9596-360
	M^3.	R78M31	R73M41	9596-341	R78M32	R73M42	9596-348	RH8M31	RH3M41	9596-349	RW8M31	RW3M41	9596-380

**Registers do not include ARB® remote receptacles.*

Note: When ordering registers, please include change gear combination or four-digit register code from dial face.

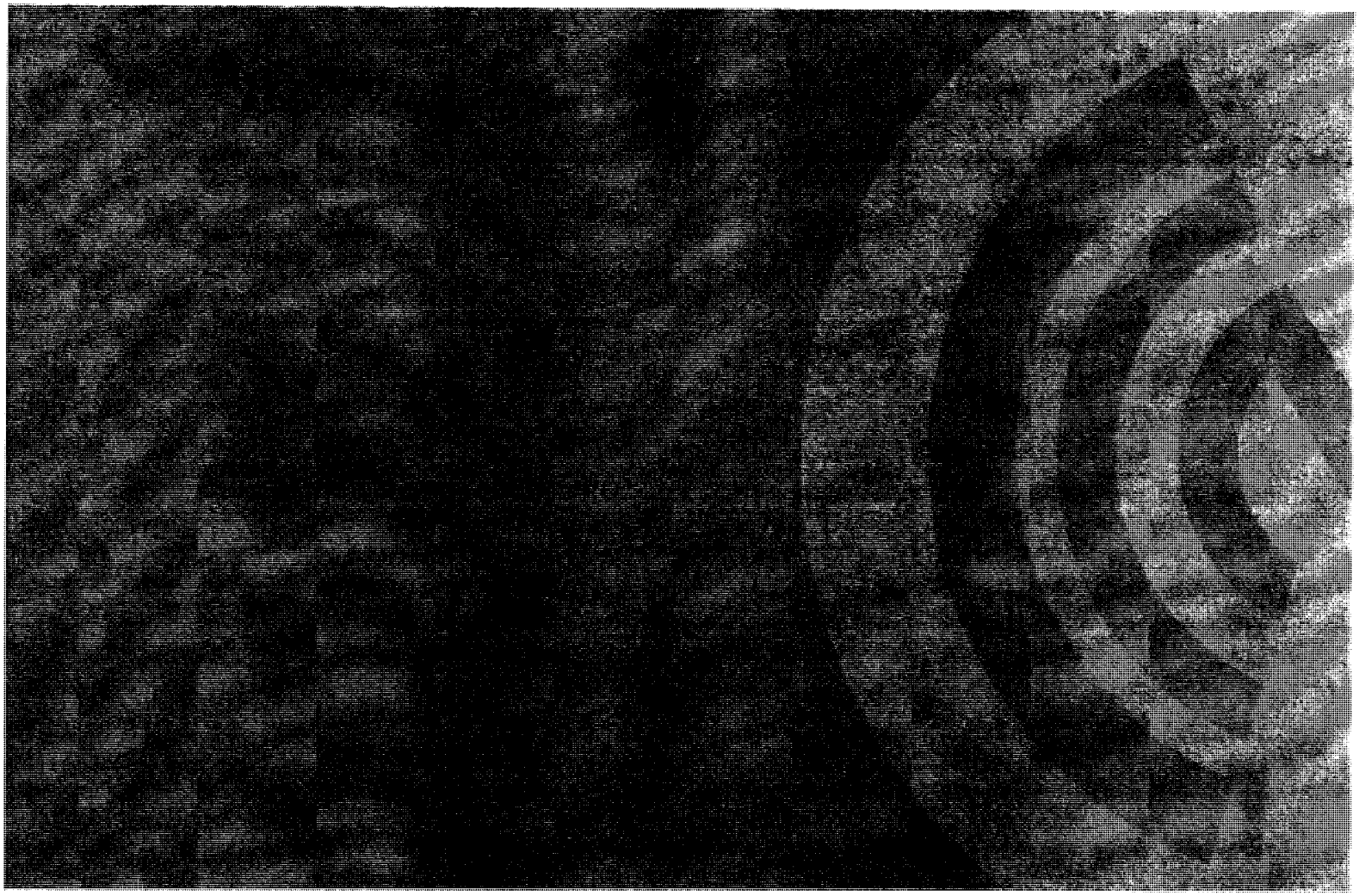

Neptune Technology Group Inc.
1600 Alabama Highway 229
Tallassee, AL 36078
USA
Tel: (800) 633-8754
Fax: (334) 283-7293

Neptune Technology Group (Canada) Ltd.
7275 West Credit Avenue
Mississauga, Ontario
L5N 5M9
Canada
Tel: (905) 858-4211
Fax: (905) 858-0428

Neptune Technology Group Inc.
Ejército Nacional No. 418
Piso 12, Desp. 1201-1202
Col. Chapultepec Morales
Delegación Miguel Hidalgo
11570 México, Distrito Federal
Tel: (525) 55203 5294 / (525) 55203 5708
Fax: (525) 55203 6503

NEPTUNE
TECHNOLOGY GROUP

neptunetg.com

PL TRUFLO 08.12 © Copyright 2012, Neptune Technology Group Inc. Neptune is a registered trademark of Neptune Technology Group Inc.
Neptune engages in ongoing research and development to improve and enhance its products. Therefore, Neptune reserves the right to change product or system specifications without notice.

AMR™ UTILITY MANAGEMENT SYSTEMS™

NEPTUNE
TECHNOLOGY GROUP

TRU/FLO® COMPOUND METER

SIZES: 2"HP, 3", 4", 6" AND 6"x8"

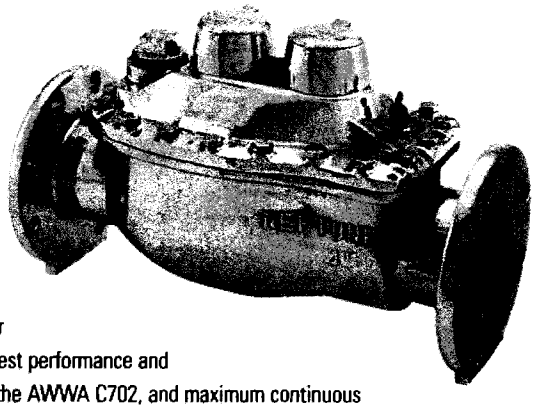

TRU/FLO® meters combine the low-flow sensitivity of a disc-type meter with the high-flow capacity of a turbine-type meter.

All TRU/FLO® Compound water meters meet or exceed the latest performance and accuracy requirements set by the AWWA C702, and maximum continuous flow rates may be exceeded by as much as 25% for intermittent periods.

APPLICATION

The TRU/FLO Compound water meter is designed to register wide-flow ranges where varying flow rates are typical. TRU/FLO meters combine the low-flow sensitivity of a disc-type meter with the high-flow capacity of a turbine-type meter.

OPERATION

The hydraulic valve transfers flow smoothly between the disc section and turbine section of the meter, minimizing the loss of accuracy in the crossover range. The turbine measuring element registers high flows and the disc measuring element registers low flows, ensuring accurate measurement at all flow rates.

CONSTRUCTION

The TRU/FLO consists of a durable no-lead high copper alloy maincase, Neptune Turbine measuring element, Neptune T-10 chamber, a patented hydraulic valve, and two magnetic-driven, roll-sealed registers.

The 6" x 8" TRU/FLO assembly consists of two 8" x 6" concentric reducers, a 6" Neptune strainer, and a 6" Neptune TRU/FLO Compound meter.

The no-lead high copper maincase is corrosion resistant, lightweight, and easy to handle.

A calibration vane allows field calibration of the UME to lengthen service life and to ensure accurate registration.

The two magnetic-driven, roll-sealed registers simplify the meter's design and reduce long-term maintenance by eliminating complicated combining drive mechanisms. For reading convenience, the registers can be mounted in any one of four positions on the meter.

WARRANTY

Neptune provides a limited warranty with respect to its TRU/FLO Compound water meters for performance, materials and workmanship.

When desired, owner maintenance is easily accomplished by in-line replacement of major components, or a factory calibrated UME.

KEY FEATURES

- Patented hydraulic valve design*
- Minimum loss of accuracy in the crossover range increases revenue
- Spring-loaded valve eliminates need for frequent adjustment and service
- Combined Turbine and Disc Measuring Elements
  - Industry-leading flow ranges at 98.5%–101.5% accuracy ensure maximum revenue
  - Direct coupling of rotor to gear train ensures accurate registration
  - Unitized Measuring Element (UME) makes maintenance easier and faster with less downtime
  - Calibration vane allows in-line service to extend life and ensure accurate registration
- Compact Maincase
  - Made from no-lead high copper alloy
  - ANSI/NSF 61 certified
  - Lifetime guarantee
  - Compact, lightweight design provides for easy installation and in-line serviceability

**U.S. patent nos. 4,437,344 and 4,429,571*

SYSTEMS COMPATIBILITY

Adaptability to all present and future systems for flexibility.

2" ACCURACY

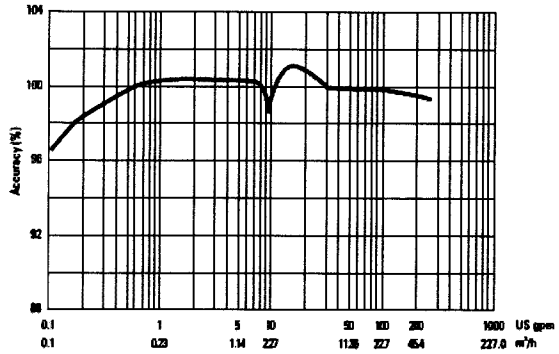

2" PRESSURE LOSS

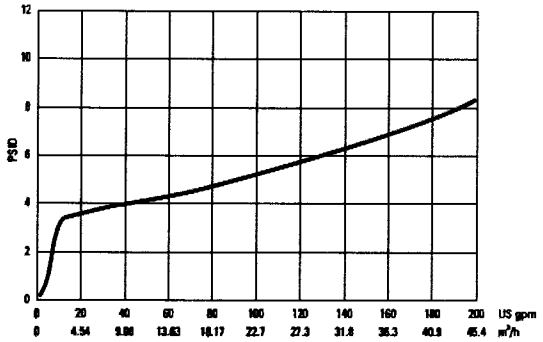

3" ACCURACY

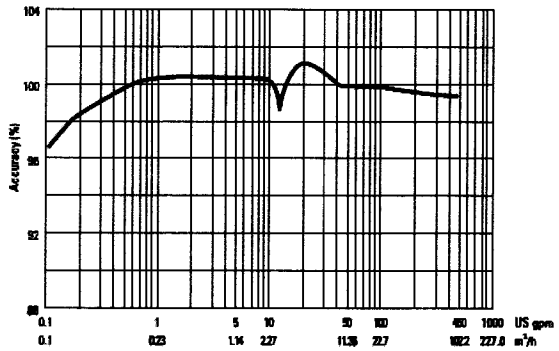

3" PRESSURE LOSS

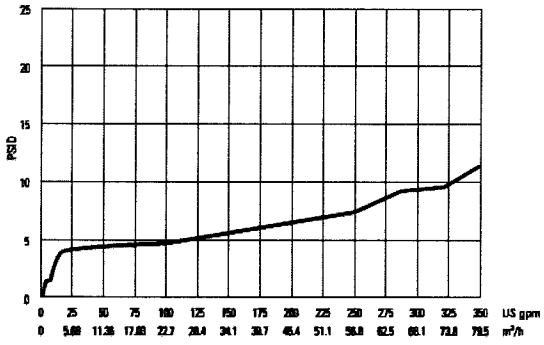

4" ACCURACY

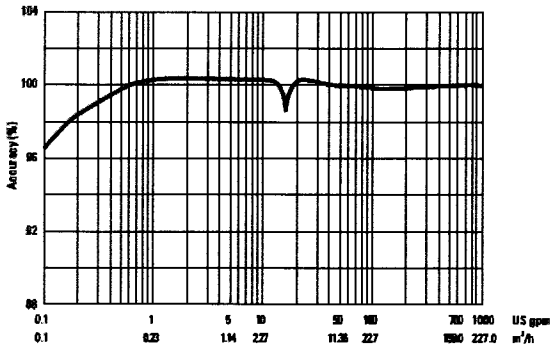

4" PRESSURE LOSS

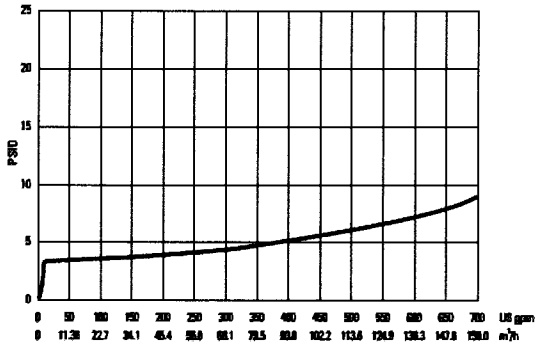

6" ACCURACY

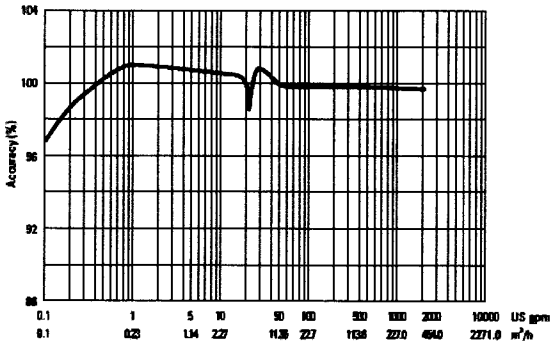

6" PRESSURE LOSS

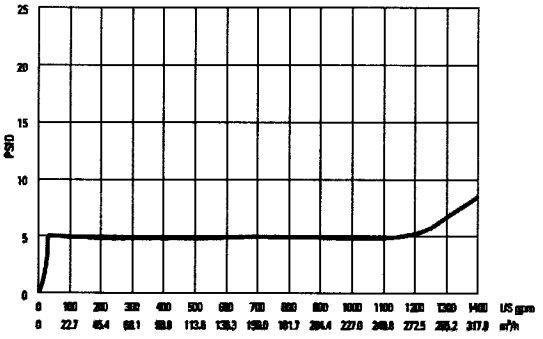

OPERATING CHARACTERISTICS

Meter Size	Normal Operating Range @100% Accuracy (±1.5%)	AWWA Standard	Low Flow @ 95% Accuracy
2"	1/2 to 200 US gpm	2 to 160 US gpm	1/8 US gpm
	0.11 to 45.4 m³/h	.454 to 36.34 m³/h	0.03 m³/h
3"	1/2 to 450 US gpm	4 to 320 US gpm	1/8 US gpm
	0.11 to 102.2 m³/h	.91 to 72.68 m³/h	0.03 m³/h
4"	1 to 1000 US gpm	6 to 500 US gpm	1/2 US gpm
	0.23 to 227.1 m³/h	1.36 to 113.56 m³/h	0.11 m³/h
6"	1 1/2 to 2000 US gpm	10 to 1000 US gpm	3/4 US gpm
	0.34 to 454.2 m³/h	2.27 to 227.12 m³/h	0.17 m³/h
6" x 8"	1 1/2 to 2000 US gpm	16 to 1600 US gpm	3/4 US gpm
	0.34 to 454.2 m³/h	3.63 to 363.4 m³/h	0.17 m³/h

DIMENSIONS

Meter Size	A in/mm	B-Std in/mm	B-ARB in/mm	C in/mm	D in/mm	E in/mm	F in/mm	G in/mm	Flange Type	Weight lbs/kg
2" HP	15 1/4	8 5/8	9	2 1/2	13/16	5 7/8	6	1 1/2 NPT	2" Oval	32
	387	219	229	64	21	149	152	38	150 lb	14.5
3"	17	10 1/2	11	3 3/4	5/8	7 1/2	8 1/2	1 1/2 NPT	3" ANSI	72
	432	267	279	95	16	191	216	38	150 lb	32.7
4"	20	12 1/2	13	4 1/2	11/16	9	9 1/8	2 NPT	4" ANSI	100
	508	318	330	114	17	229	232	51	150 lb	45.4
6"	24	15 3/4	16 1/4	5 1/2	1	11	12 3/4	2 NPT	6" ANSI	208
	610	400	413	140	25	279	324	51	150 lb	94.3
6"x8"	55 3/8	15 3/4	16 1/4	5 1/2	1	11	12 3/4	2 NPT	6" ANSI	460
	1407	400	413	140	25	279	232	51	150 lb	208.5

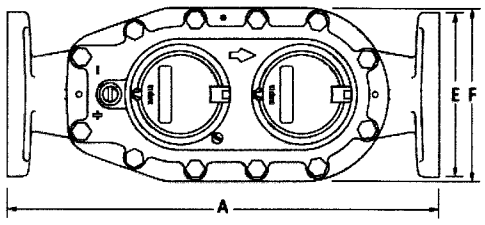

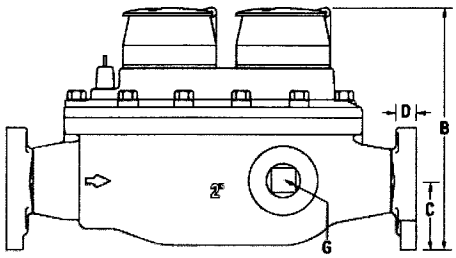

GUARANTEED SYSTEMS COMPATIBILITY

All Neptune TRU/FLO Compound meters are guaranteed adaptable to our ARB®V, ProRead™ (ARB VI), E-Coder)R900*i*, E-Coder, TRICON®/S, TRICON/E3®, and Neptune meter reading systems without removing the meter from service.

REGISTRATION

		Turbine Side		Disc Side
Registration (per sweep hand revolution)		2", 3", 4"	6", 6"x8"	2",3",4" 6",6"x8"
1,000	US Gallons		3	
1,000	Imperial Gallons		3	
100	US Gallons	3		
100	Imperial Gallons	3		
100	Cubic Feet		3	
10	US Gallons			3
10	Imperial Gallons			3
10	Cubic Feet	3		
10	Cubic Metres		3	
1	Cubic Foot			3
1	Cubic Metre	3		
0.1	Cubic Metre			3
	Turbine Side	Disc Side		
Register Capacity (6-wheel odometer)	2", 3",	6", 4"	2",3",4" 6"x8"	6",6"x8"
1,000,000,000	US Gallons		3	
1,000,000,000	Imperial Gallons		3	
100,000,000	US Gallons	3		
100,000,000	Imperial Gallons	3		
100,000,000	Cubic Feet		3	
10,000,000	US Gallons			3
10,000,000	Imperial Gallons			3
10,000,000	Cubic Feet	3		
10,000,000	Cubic Metres		3	
1,000,000	Cubic Feet			3
1,000,000	Cubic Metres	3		
100,000	Cubic Metres			3

SPECIFICATIONS

- Application: cold water measurement of flow in one direction
- Maximum operating pressure: 150 psi (1034 kPa)
- Maximum operating temperature: 80°F
- Register: direct reading, center sweep, roll-sealed, magnetic drive with low-flow indicator
- Measuring element:
  - AWWA Class II Turbine, dual suspension
  - Nutating disc

OPTIONS

- Sizes: 2"HP, 3", 4", 6", and 6"x8"
- Units of measure: U.S. gallons, imperial gallons, cubic feet, cubic metres
- Register types:
  - Direct reading: bronze box and cover (standard)
  - Remote reading systems*: ProRead, E-Coder)R900*i*, E-Coder, TRICON/S, TRICON/E3
  - Reclaim
- Companion flanges:
  - 2", 3", 4" bronze or cast iron
  - 6", 6" x 8" cast iron
- Strainer: 2", 3", 4", 6" ANSI/NSF 61 no-lead high copper alloy

* *Consult factory for meter performance specifications when fitted with ARB.*

Neptune engages in ongoing research and development to improve and enhance its products. Therefore, Neptune reserves the right to change product or system specifications without notice.

Neptune Technology Group Inc.
1600 Alabama Highway 229
Tallassee, AL 36078
USA
Tel: (800) 645-1892
Fax: (334) 283-7299

Neptune Technology Group (Canada) Ltd.
7275 West Credit Avenue
Mississauga, Ontario
L5N 5M9
Canada
Tel: (905) 858-4211
Fax: (905) 858-0428

Neptune Technology Group Inc.
Ejército Nacional No. 418
Piso 12, Desp. 1201-1202
Col. Chapultepec Morales
Delegación Miguel Hidalgo
11570 México, Distrito Federal
Tel: (525) 55203 5294 / (525) 55203 5708
Fax: (525) 55203 6503

NEPTUNE TECHNOLOGY GROUP
neptunetg.com

PS TRUFLO 04.06 © Copyright 2006, Neptune Technology Group Inc. Neptune is a registered trademark of Neptune Technology Group Inc.

CERTIFICATE OF LIABILITY INSURANCE

DATE (MM/DD/YYYY) 11/11/2015

THIS CERTIFICATE IS ISSUED AS A MATTER OF INFORMATION ONLY AND CONFERS NO RIGHTS UPON THE CERTIFICATE HOLDER. THIS CERTIFICATE DOES NOT AFFIRMATIVELY OR NEGATIVELY AMEND, EXTEND OR ALTER THE COVERAGE AFFORDED BY THE POLICIES BELOW. THIS CERTIFICATE OF INSURANCE DOES NOT CONSTITUTE A CONTRACT BETWEEN THE ISSUING INSURER(S), AUTHORIZED REPRESENTATIVE OR PRODUCER, AND THE CERTIFICATE HOLDER.

IMPORTANT: If the certificate holder is an ADDITIONAL INSURED, the policy(ies) must be endorsed. If SUBROGATION IS WAIVED, subject to the terms and conditions of the policy, certain policies may require an endorsement. A statement on this certificate does not confer rights to the certificate holder in lieu of such endorsement(s).

PRODUCER
MARSH USA, INC.
TWO ALLIANCE CENTER
3560 LENOX ROAD, SUITE 2400
ATLANTA, GA 30305
Attn: HDSupply.certrequest@marsh.com or fax 212.948.1142
775978-HD-GAWX-15-16 WATER

CONTACT NAME:
PHONE (A/C, No, Ext): **FAX (A/C, No):**
E-MAIL ADDRESS:

INSURER(S) AFFORDING COVERAGE	NAIC #
INSURER A : Illinois National Insurance Company	23817
INSURER B : New Hampshire Ins Company	23841
INSURER C : Great American Assurance Co	26344
INSURER D : National Union Fire Insurance Co. of Pittsburgh, PA	19445
INSURER E :	
INSURER F :	

INSURED
HD SUPPLY, INC.
CUMBERLAND CENTER II
3100 CUMBERLAND BOULEVARD
ATLANTA, GA 30339

COVERAGES **CERTIFICATE NUMBER:** ATL-003930535-01 **REVISION NUMBER:** 1

THIS IS TO CERTIFY THAT THE POLICIES OF INSURANCE LISTED BELOW HAVE BEEN ISSUED TO THE INSURED NAMED ABOVE FOR THE POLICY PERIOD INDICATED. NOTWITHSTANDING ANY REQUIREMENT, TERM OR CONDITION OF ANY CONTRACT OR OTHER DOCUMENT WITH RESPECT TO WHICH THIS CERTIFICATE MAY BE ISSUED OR MAY PERTAIN, THE INSURANCE AFFORDED BY THE POLICIES DESCRIBED HEREIN IS SUBJECT TO ALL THE TERMS, EXCLUSIONS AND CONDITIONS OF SUCH POLICIES. LIMITS SHOWN MAY HAVE BEEN REDUCED BY PAID CLAIMS.

INSR LTR	TYPE OF INSURANCE	ADDL INSD	SUBR WVD	POLICY NUMBER	POLICY EFF (MM/DD/YYYY)	POLICY EXP (MM/DD/YYYY)	LIMITS	
D	X COMMERCIAL GENERAL LIABILITY			GL3333254	08/30/2015	08/30/2016	EACH OCCURRENCE	$ 2,000,000
	CLAIMS-MADE X OCCUR						DAMAGE TO RENTED PREMISES (Ea occurrence)	$ 1,000,000
							MED EXP (Any one person)	$ 50,000
							PERSONAL & ADV INJURY	$ 2,000,000
	GEN'L AGGREGATE LIMIT APPLIES PER:						GENERAL AGGREGATE	$ 5,000,000
	X POLICY PRO-JECT LOC						PRODUCTS - COMP/OP AGG	$ 4,000,000
	OTHER:							$
D	AUTOMOBILE LIABILITY			CA 7469844 (AOS)	08/30/2015	08/30/2016	COMBINED SINGLE LIMIT (Ea accident)	$ 5,000,000
B	X ANY AUTO			CA 7469843 (MA)	08/30/2015	08/30/2016	BODILY INJURY (Per person)	$
D	ALL OWNED AUTOS / SCHEDULED AUTOS			CA 7469845 (VA)	08/30/2015	08/30/2016	BODILY INJURY (Per accident)	$
	HIRED AUTOS / NON-OWNED AUTOS						PROPERTY DAMAGE (Per accident)	$
							Self Insured Phy Dmg	$
C	X UMBRELLA LIAB X OCCUR			UMB 3106996	08/30/2015	08/30/2016	EACH OCCURRENCE	$ 5,000,000
	EXCESS LIAB CLAIMS-MADE						AGGREGATE	$ 5,000,000
	DED X RETENTION $ 25,000							$
B	WORKERS COMPENSATION AND EMPLOYERS' LIABILITY			WC 024781030 (AOS)	08/30/2015	08/30/2016	X PER STATUTE / OTH-ER	
D	ANY PROPRIETOR/PARTNER/EXECUTIVE OFFICER/MEMBER EXCLUDED? (Mandatory in NH) Y/N N	N / A		WC 024781031 (CA)	08/30/2015	08/30/2016	E.L. EACH ACCIDENT	$ 1,000,000
A	If yes, describe under DESCRIPTION OF OPERATIONS below			WC 024781032 (FL)	08/30/2015	08/30/2016	E.L. DISEASE - EA EMPLOYEE	$ 1,000,000
				(SEE ATTACHED)			E.L. DISEASE - POLICY LIMIT	$ 1,000,000

DESCRIPTION OF OPERATIONS / LOCATIONS / VEHICLES (ACORD 101, Additional Remarks Schedule, may be attached if more space is required)
CERTIFICATE HOLDER IS INCLUDED AS AN ADDITIONAL INSURED IF REQUIRED BY WRITTEN CONTRACT ON THE ABOVE GENERAL LIABILITY AND AUTOMOBILE LIABILITY POLICIES, BUT ONLY WITH RESPECT TO LIABILITY ARISING OUT OF THE OPERATIONS OF THE NAMED INSURED.

CERTIFICATE HOLDER

CITY OF GOODYEAR
190 N. LITCHFIELD RD.
GOODYEAR, AZ 85338

CANCELLATION

SHOULD ANY OF THE ABOVE DESCRIBED POLICIES BE CANCELLED BEFORE THE EXPIRATION DATE THEREOF, NOTICE WILL BE DELIVERED IN ACCORDANCE WITH THE POLICY PROVISIONS.

AUTHORIZED REPRESENTATIVE of Marsh USA Inc.
Manashi Mukherjee Manashi Mukherjee

© 1988-2014 ACORD CORPORATION. All rights reserved.

The ACORD name and logo are registered marks of ACORD

AGENCY CUSTOMER ID: 775978
LOC #: Atlanta

ADDITIONAL REMARKS SCHEDULE

AGENCY	NAMED INSURED
MARSH USA, INC.	HD SUPPLY, INC. CUMBERLAND CENTER II 3100 CUMBERLAND BOULEVARD ATLANTA, GA 30339
POLICY NUMBER	
CARRIER / NAIC CODE	EFFECTIVE DATE:

ADDITIONAL REMARKS

THIS ADDITIONAL REMARKS FORM IS A SCHEDULE TO ACORD FORM,
FORM NUMBER: 25 FORM TITLE: Certificate of Liability Insurance

HD Supply 15-16 Additional Workers Compensation Carriers Continued:

Carrier: New Hampshire Insurance Company
Policy #: WC 024781033
Effective Dates: 08/30/2015 - 08/30/2016
Workers Compensation Limits: Statutory
EL Each Accident - $1,000,000
EL Disease - Policy Limit - $1,000,000
EL Disease - Each Employee - $1,000,000
States Covered: AK, AZ, VA

Carrier: New Hampshire Insurance Company
Policy #: WC 024781034
Effective Dates: 08/30/2015 - 08/30/2016
Workers Compensation Limits: Statutory
EL Each Accident - $1,000,000
EL Disease - Policy Limit - $1,000,000
EL Disease - Each Employee - $1,000,000
States Covered: IL, KY, NC, NH, UT, VT

Carrier: New Hampshire Insurance Company
Policy #: WC 024781036
Effective Dates: 08/30/2015 - 08/30/2016
Workers Compensation Limits: Statutory
EL Each Accident - $1,000,000
EL Disease - Policy Limit - $1,000,000
EL Disease - Each Employee - $1,000,000
States Covered: ME

Carrier: New Hampshire Insurance Company
Policy #: WC 024781037
Effective Dates: 08/30/2015 - 08/30/2016
Workers Compensation Limits: Statutory
EL Each Accident - $1,000,000
EL Disease - Policy Limit - $1,000,000
EL Disease - Each Employee - $1,000,000
States Covered: NJ, PA

Carrier: New Hampshire Insurance Company
Policy #: WC 024781035
Effective Dates: 08/30/2015 - 08/30/2016
Workers Compensation Limits: Statutory
EL Each Accident - $1,000,000
EL Disease - Policy Limit - $1,000,000
EL Disease - Each Employee - $1,000,000
States Covered: MA,ND,OH,WA,WI,WY

© 2008 ACORD CORPORATION. All rights reserved.
The ACORD name and logo are registered marks of ACORD

AGENCY CUSTOMER ID: 775978
LOC #: Atlanta

ADDITIONAL REMARKS SCHEDULE

AGENCY	NAMED INSURED
MARSH USA, INC.	HD SUPPLY, INC. CUMBERLAND CENTER II 3100 CUMBERLAND BOULEVARD ATLANTA, GA 30339
POLICY NUMBER	
CARRIER / NAIC CODE	EFFECTIVE DATE:

ADDITIONAL REMARKS

THIS ADDITIONAL REMARKS FORM IS A SCHEDULE TO ACORD FORM,
FORM NUMBER: 25 FORM TITLE: Certificate of Liability Insurance

---

HD SUPPLY INSUREDS

HD Supply, Inc. Entity List

HD Supply Holdings, Inc. (f/k/a HDS Investment Holding, Inc.; name changed)
HDS Holding Corporation
HD Supply, Inc.
HD Supply Holdings, LLC
HD Supply GP & Management, Inc.
HD Supply Management, Inc.
HD Supply Support Services, Inc.
Brafasco Holdings II, Inc.
Brafasco Holdings, Inc.
Cox Lumber Co. (merged into LBM Holdings, LLC)
Creative Touch Interiors, Inc. d/b/a HD Supply Interior Solutions
HD Supply Canada Inc d/b/a HD Supply Industrial Solutions
HD Supply Charitable Fund, Inc.
HD Supply Construction Supply Group, Inc.
HD Supply Construction Supply, Ltd. d/b/a HD Supply Construction and Industrial
HD Supply Distribution Services, LLC d/b/a HD Supply Hardware Solutions
HD Supply Facilities Maintenance Group, Inc.
HD Supply Facilities Maintenance, Ltd. d/b/a HD Supply Facilities Maintenance; d/b/a HD Supply Government Solutions;d/b/a HD Supply Healthcare Solutions; d/b/a HD Supply Hospitality Solutions; d/b/a HD Supply Maintenance Solutions;d/b/a HD Supply Multi Family Solutions
HD Supply FM Services, LLC (organized)
HD Supply Electrical, Ltd. (converted and merged into HD Supply Utilities, Ltd.)
HD Supply Fasteners & Tools, Inc. (name changed to HDS Power Solutions, Inc.)
HDS Power Solutions, Inc. (f/k/a HD Supply Fasteners & Tools, Inc.; name changed)
HD Supply Power Solutions Group, Inc. (f/k/a HD Supply Utilities Group, Inc name changed)
HD Supply Power Solutions, Ltd. (f/k/a HD Supply Utilities, Ltd., name changed) d/b/a HD Supply Power Solutions
HD Supply Repair & Remodel, LLC d/b/a HD Supply Home Improvement Solutions; d/b/a Contractors' Warehouse
HD Supply Utilities Group, Inc. (name changed to HD Supply Power Solutions Group, Inc.)
HD Supply Utilities, Ltd. (name changed to HD Supply Power Solutions, Ltd.)
HD Supply Waterworks Group, Inc.
HD Supply Waterworks, Ltd. d/b/a HD Supply Waterworks; d/b/a HD Supply Fire Protection; d/b/a/ HD Supply Fusible Piping
HD Builder Solutions Group, LLC (merged into Creative Touch Interiors, Inc.)
HDS IP Holding, LLC
HSI IP, Inc.
LBM Holdings, LLC
Madison Corner, LLC (dissolved)
NHDSA LLC
NHDSA Holding, LLC
Park Emp, LLC (dissolved)
ProValue, LLC
Sunbelt Supply Canada, Inc. (dissolved)
White Cap Construction Supply, Inc.
Williams Bros. Lumber Company, LLC (dissolved)
HD Supply International Holdings, Inc.

© 2008 ACORD CORPORATION. All rights reserved.
The ACORD name and logo are registered marks of ACORD

AGENCY CUSTOMER ID: 775978

LOC #: Atlanta

ACORD® ADDITIONAL REMARKS SCHEDULE

AGENCY		NAMED INSURED
MARSH USA, INC.		HD SUPPLY, INC. CUMBERLAND CENTER II 3100 CUMBERLAND BOULEVARD ATLANTA, GA 30339
POLICY NUMBER		
CARRIER	NAIC CODE	EFFECTIVE DATE:

ADDITIONAL REMARKS

THIS ADDITIONAL REMARKS FORM IS A SCHEDULE TO ACORD FORM,

FORM NUMBER: 25 **FORM TITLE:** Certificate of Liability Insurance

HD Supply International Holdings II, LLC
HD Supply (Hong Kong) Limited
HD Supply India Private Limited (dissolved)
HD Supply Panama, S.A.
HD Supply (Shenzhen) Company Limited
Pro Canadian Holdings I, ULC
Solbelt Supply Southwest, S.A. de C.V.
Amerifile LLC (merged into HD Supply Facilities Maintenance, Ltd.)
AP RE LLC (merged into HD Supply Facilities Maintenance, Ltd)
GCP Amerifile Coinvest Inc. (merged into HD Supply Holdings, LLC)
Peachtree Business Products LLC (merged into HD Supply Facilities Maintenance, Ltd)
Varsity AP Holding Corporation (merged into HD Supply Holdings, LLC)
Varsity AP Holdings LLC (merged into HD Supply Facilities Maintenance, Ltd.)

© 2008 ACORD CORPORATION. All rights reserved.

The ACORD name and logo are registered marks of ACORD

THIS ENDORSEMENT CHANGES THE POLICY. PLEASE READ IT CAREFULLY.

ENDORSEMENT #

This endorsement, effective 12:01 A.M. 08/30/2015 forms a part of

Policy No. CA 746-98-44 issued to HD SUPPLY, INC

By NATIONAL UNION FIRE INSURANCE COMPANY OF PITTSBURGH, PA

ADDITIONAL INSURED - WHERE REQUIRED UNDER CONTRACT OR AGREEMENT

This endorsement modifies insurance provided under the following:

BUSINESS AUTO COVERAGE FORM

SCHEDULE

ADDITIONAL INSURED:
ANY PERSON OR ORGANIZATION FOR WHOM YOU ARE CONTRACTUALLY BOUND BY A WRITTEN CONTRACT OR AGREEMENT TO PROVIDE ADDITIONAL INSURED STATUS BUT ONLY TO THE EXTENT OF SUCH PERSON OR ORGANIZATIONS LIABILITY ARISING OUT OF THE USE OF A COVERED "AUTO".

I. **SECTION II - LIABILITY COVERAGE, A. Coverage, 1. – Who Is Insured,** is amended to add:

   d. Any person or organization, shown in the schedule above, to whom you become obligated to include as an additional insured under this policy, as a result of any contract or agreement you enter into which requires you to furnish insurance to that person or organization of the type provided by this policy, but only with respect to liability arising out of use of a covered "auto". However, the insurance provided will not exceed the lesser of:

      (1) The coverage and/or limits of this policy, or

      (2) The coverage and/or limits required by said contract or agreement.

Authorized Representative

THIS ENDORSEMENT CHANGES THE POLICY. PLEASE READ IT CAREFULLY.

ADDITIONAL INSURED – OWNERS, LESSEES OR CONTRACTORS – SCHEDULED PERSON OR ORGANIZATION

This endorsement modifies insurance provided under the following:

COMMERCIAL GENERAL LIABILITY COVERAGE PART

SCHEDULE

Name Of Additional Insured Person(s) Or Organization(s)	Location(s) Of Covered Operations
ANY PERSON OR ORGANIZATION FOR WHOM YOU ARE PERFORMING OPERATIONS WHEN YOU AND SUCH PERSON OR ORGANIZATION HAVE AGREED IN WRITING IN A CONTRACT OR AGREEMENT THAT SUCH PERSON OR ORGANIZATION BE ADDED AS AN ADDITIONAL INSURED ON YOUR POLICY	PER THE CONTRACT OR AGREEMENT
Information required to complete this Schedule, if not shown above, will be shown in the Declarations.	

A. **Section II – Who Is An Insured** is amended to include as an additional insured the person(s) or organization(s) shown in the Schedule, but only with respect to liability for "bodily injury", "property damage" or "personal and advertising injury" caused, in whole or in part, by:

1. Your acts or omissions; or
2. The acts or omissions of those acting on your behalf;

in the performance of your ongoing operations for the additional insured(s) at the location(s) designated above.

However:

1. The insurance afforded to such additional insured only applies to the extent permitted by law; and
2. If coverage provided to the additional insured is required by a contract or agreement, the insurance afforded to such additional insured will not be broader than that which you are required by the contract or agreement to provide for such additional insured.

B. With respect to the insurance afforded to these additional insureds, the following additional exclusions apply:

This insurance does not apply to "bodily injury" or "property damage" occurring after:

1. All work, including materials, parts or equipment furnished in connection with such work, on the project (other than service, maintenance or repairs) to be performed by or on behalf of the additional insured(s) at the location of the covered operations has been completed; or
2. That portion of "your work" out of which the injury or damage arises has been put to its intended use by any person or organization other than another contractor or subcontractor engaged in performing operations for a principal as a part of the same project.

© Insurance Services Office, Inc., 2012

C. With respect to the insurance afforded to these additional insureds, the following is added to **Section III – Limits Of Insurance:**

If coverage provided to the additional insured is required by a contract or agreement, the most we will pay on behalf of the additional insured is the amount of insurance:

1. Required by the contract or agreement; or
2. Available under the applicable Limits of Insurance shown in the Declarations;

whichever is less.

This endorsement shall not increase the applicable Limits of Insurance shown in the Declarations.

© Insurance Services Office, Inc., 2012

Run Date 7/11/16 HD SUPPLY WATERWORKS, LTD. Entered by: 2JY

CITY OF COTTONWOOD, AZ
STOCK FLAGSTAFF
UTILITIES DEPT
111 N MAIN ST
COTTONWOOD AZ 86326
Telephone: 928-634-0186
Fax: 928-639-4254

GILBERT AZ
1410 W Harvard Ave
Gilbert AZ 85233
Telephone: 480-926-7003
Fax: 480-926-7050

7/08/16 Bid ID: 4562453 16 0708 CITY OF COTTONWOOD-METERS Page 1

Line	Quantity	Sell Per	Description	Net Price	Extended Price
10	250	EA	ED2B31R7G8SG54 5/8X3/4 T-10 PLS B/C PROREAD-PIT GAL PITPAD NO LEAD ED2B31R7G8SG54	87.90	21,975.00
20	75	EA	T10 1" BRZ 302 R900I PIT USG NEPT ED2F21RWG3S1514 PEORIA	247.17	18,537.75
30	75	EA	T10 5/8X3/4" BRZ 302 R900I PIT GAL NEPT MTR CHANDLER NO LEAD ED2B21RWG3S1512	199.26	14,944.50

Subtotal: **55,457.25**

Tax: **4,325.67**
Bid Total: **59,782.92**

City of Cottonwood, Arizona
City Council Agenda Communication

Print

Meeting Date:	September 6, 2016
Subject:	**Renewal of the Intergovernmental Agreement with Mingus Union High School District for Use of the Cottonwood Aquatics Center**
Department:	Community Services
From:	Richard Faust, Community Services General Manager

REQUESTED ACTION

Renewal of the Intergovernmental Agreement with the Mingus Union High School District for full use of the Cottonwood Aquatics Center facility from August to November 2016.

SUGGESTED MOTION

If the Council desires to approve this item the suggested motion is:

"I move to approve the Intergovernmental Agreement with Mingus Union High School District for use of the Cottonwood Aquatics Center from August through November, 2016."

BACKGROUND

As approved by Council in prior years, MUHS seeks to use the City's outdoor pool facilities on an exclusive basis for the 2016 competitive swimming season in exchange for a financial contribution toward the costs of safely operating the pool during that period.

Council has previously indicated that the City would like to see MUHS cover at least 50% of the costs of operating the pool during its exclusive use period. For the 2016 season, MUHS and City staff have negotiated a contribution amount of $9,500.00, which represents a $2,000.00 increase over last year's contribution.

JUSTIFICATION/BENEFITS/ISSUES

Under the Council's leadership, the City continues to support and contribute toward youth programming throughout the community and Verde Valley. And the City's partnership with MUHS on this is one example of that policy and philosophy.

COST/FUNDING SOURCE

If the Council approves the renewal of the agreement and the proposed contribution amount for this year, the

additional costs of approximately $15,000.00 are already accounted for in the Outdoor Pool line item budget for this budget cycle.

ATTACHMENTS:		
Name:	Description:	Type:
IGA_for_MUHS_Use_of_Outdoor_Pool_-_FY_2016.docx	IGA with Mingus Union High Schoo District - Aquatics Center Facility Use	Cover Memo

INTERGOVERNMENTAL AGREEMENT
BETWEEN THE CITY OF COTTONWOOD AND
MINGUS UNION HIGH SCHOOL
(Cottonwood Outdoor Aquatics Center)

This Intergovernmental Agreement ("Agreement") is made and entered into this 6th day of September, 2016, between CITY OF COTTONWOOD, an Arizona municipal corporation ("City"), and MINGUS UNION HIGH SCHOOL DISTRICT of YAVAPAI COUNTY, ARIZONA, a political subdivision of the State of Arizona ("School District"), hereinafter collectively referred to as the "parties".

RECITALS:

A. Pursuant to A.R.S. § 11-951 *et seq.*, City and School District may contract for services or jointly exercise any powers common to the contracting parties and may enter into intergovernmental agreements with one another for joint or cooperative action.

B. City is authorized by A.R.S. §§ 9-240 and 9-276, to enter into this Agreement.

C. School District is authorized by A.R.S. § 15-364 to enter into this Agreement.

D. City upgraded and expanded its outdoor aquatics facility ("Aquatics Facility") in July, 2010, and desires to make that facility available to School District for its use from a varying, agreed-upon date in August of each year this Agreement is in effect through a varying, agreed-upon date in November of each such year, under the terms and conditions set forth herein, which terms and conditions shall include the School District's payment of a share of the costs of utilities (APS, UNS Gas, Water and Sewer Utilities), chemicals, and labor (*i.e.*, lifeguards, pool maintenance, and custodial service) required and used to operate the facility during the months of use for each year that this Agreement is in effect.

NOW, THEREFORE, in consideration of the above recitals and mutual promises set forth below, City and School District agree as follows:

1. City Grant of License to Use Aquatics Facility. City hereby grants to School District a limited license subject to School District control pursuant to this Agreement to use the Aquatics Facility to provide physical education classes, lap swim programs, and extracurricular athletic activities at the Aquatics Facility for the benefit of students at Mingus Union High School, and to use the parking area of the Aquatics Facility for benefit of students and members of the public attending Mingus Union High School athletic events.

    1.1. The license granted to School District is subject to the terms and conditions stated in this Agreement.

    1.2. The license granted shall commence upon an agreed-upon date in August and last through an agreed upon date in November of each year which will be deemed the normal use period for High School Use of Outdoor Pool facilities by the City.

2. Scheduling and Use of Aquatics Facility by School District. On or before August 1 of each year that this Agreement is in effect, the parties shall develop a schedule for the School District's use of the Aquatics Facility for the upcoming season, including classes and other educational programs;

practices; meets/tournaments; and other events and activities for which the School District anticipates a need to use the Aquatics Facility, including any use of the Aquatics Facility by third-parties associated with School District. All proposed uses shall be subject to City review and approval.

3. Aquatics Facility Operations & Maintenance. City shall provide all management of facilities for use of the Aquatics Facility involving pool mechanical operations, cleaning and overall maintenance and upkeep to keep facilities attractive and safe for all School District users. This will include all pool vacuuming, chemical feeding, monitoring of chemical feed systems, and management of pool pumps, motors and apparatus. City will make available all bath-house changing rooms/restroom/shower facilities for use and year-round deck space for a 12' x 16' storage shed area.

4. School District Operation/Ownership of Scoreboard and Electronic Touchpad Systems. City will authorize the School District's construction and installation of scoreboard/timing and underground electronic control systems at the Aquatics Facility. City will not be responsible for loss, damage or vandalism of the systems nor will City be responsible for the upgrades, maintenance, or repairs to such systems on City property at any time, unless damage is incurred by the negligence of City staff, or damages occur during the course of normal operating hours during a City program/event. (*See* Section 10).

5. School District Payment. Within 30 days of the date this Agreement is approved by both parties, the District shall pay the City the sum of nine thousand, five hundred dollars ($9,500.00) as the District's agreed-upon share of the cost of operating the pool in FY 2016-2017. In subsequent years, the City shall notify the District of its proportional share of the cost of operating the pool in July of that year, and the District shall pay that sum to the City within 30 days of the date of the agreement.

6. Scope of School District Use:

   6.1. School District shall have use of the Aquatics Facility for all athletic competitions, practice and educational activities benefiting students at Mingus Union High School from 3:00 p.m. to 6:00 p.m. Monday through Friday, 7:00 a.m. to 10:00 a.m. on Saturdays, or as dictated by events or scheduling activities identified to City Recreation Center staff.

   6.2. School District shall be able to use the Aquatics Facility for school-related activities or other activities as authorized by City, whereby School District shall supervise all activities as scheduled.

   6.3. School District shall have the right to use any available parking spaces in the parking area for the benefit of students and members of the public attending any event, activity or program as scheduled.

7. City Responsibilities.

   7.1. City shall have general responsibility for operation and maintenance of the Aquatics Facility. Without limiting the generality of the foregoing, City shall:

   a. Provide for American Red Cross certified lifeguards necessary for supervising safe use of the pool and the facility where necessary when School District does not have personnel available with these credentials. City shall charge School District for such staff and labor at normal City pay rates for personnel, not to exceed $15.00 per hour

per guard or supervisor.

b. Reserve use of facilities, as necessary, for use by School District.

c. Provide all necessary equipment for the operation of the Aquatics Facility safely and efficiently and ensure that City staff operate said the mechanical systems and pumps for proper facility operations.

d. Provide proper supervision to ensure that the Aquatics Facility, including without limitation, diving structures, lane lines, and pool equipment, are properly used and that pool users follow established rules and regulations of the City's Aquatics Facility Manual in regards to safe use of the pool and outlying facilities.

e. Provide all custodial maintenance operations for bathhouse and restroom facilities at City cost during the School District's use of the Aquatics Facility from the agreed-upon date in August through November 15 of each year. Custodial services will be provided three times a week with a local company in order to keep the facilities clean and sanitized for School District use.

f. Have the right to operate or contract to have operated a concession stand at the Aquatics Facility, and any profits, fees or charges in connection therewith being retained by City.

g. Not charge admission fees or charges to the public; however it will allow School District to do so, should School District authorize such fees for program activities.

h. Contact School District Athletic Director (or designee) in the event of any power outage or other condition which would prompt the shut-down of the Aquatics Facility pending power restoration or repairs.

7.2. Except as stated in Section 8.1(a) below, City shall have responsibility for general maintenance and upkeep of the Facility, including without limitation, maintenance of the pool equipment, heaters, diving structure, supplies, water chemistry, vacuuming and cleaning.

7.3. A cleaning and vacuuming schedule shall be coordinated with School District pursuant to which City shall be allowed three (3) days each week, for a minimum of four (4) hours per day, to maintain proper cleaning and maintenance of the Aquatics Facility.

7.4. At all times, City shall oversee routine maintenance, including but not limited to, backwashing, daily equipment checks and/or adjustments, equipment repairs and/or replacement.

7.5. At all times, City shall have responsibility for the condition of the equipment and water chemistry of the Aquatics Facility. Periodically, City shall evaluate pool conditions for safe swimming, and shall have the authority to close the pool at any time when it determines that pool conditions are unsafe, subject to any ruling or determination made by the Yavapai County Health Department and regulations as specified.

8. <u>School District Responsibilities</u>.

8.1. While the School District is exercising its license to use the Aquatics Facility, School District shall:

a. Be responsible for safe pool use and for hosing off the pool deck, trash pick-up and supervision of students, swim teams, or other persons using the Aquatics Facility for education, athletic or competition purposes. School District shall also be responsible for maintaining its storage area in a clean and orderly manner.

b. Provide supervision to ensure that the pool facility, including without limitation, diving structures, lane lines, and pool equipment, are properly used and that pool users follow established rules and regulations of the City's Aquatics Facility Manual in regard to safe use of pool facilities. School District personnel MUST KEEP POOL GATES AND DOORS LOCKED AT ALL TIMES. School District personnel should also take proper action with students who abuse pool rules, equipment and diving structures in order to ensure a safe aquatic environment. School District personnel should provide adequate training on use of equipment and use of facilities.

c. Provide American Red Cross certified lifeguards necessary for supervising safe use of the pool and Aquatics Facility. School District personnel supervising any activity must hold current American Red Cross life-saving certification to avoid the assignment of City staff to supervise the activity. If assistance of City staff is needed for any School District sponsored activity or function, School District shall reimburse City for the time and labor of City staff needed for the activity.

d. Be responsible for training system, kick boards and other equipment associated with, and used by, swim teams.

e. Pay in a timely manner the invoices submitted to it by the City on a monthly basis, as more fully described in Section 5.

9. <u>Coordination of Use</u>.

9.1. School District shall cooperate with City to coordinate use and scheduling of the Aquatics Facility through Cottonwood Community Services Department, Aquatics Division, whose mailing address and phone number are, respectively: 827 North Main Street, Cottonwood, Arizona 86326; (928) 639-3200.

9.2. Pool heaters on site at the Aquatics Facility shall be used as necessary for the School District. School District may require the use of such heaters during its use of the pool facility. In such event, City shall start, monitor, operate and turn off the pool heaters, as required. The heaters shall be operated at a "set" temperature mutually agreed upon by the parties. School District personnel shall not operate pool heaters.

9.3. City shall notify School District when maintenance or repairs will require the water to be shut off in and around the pool areas during any time period that the School District has a right to or is otherwise scheduled to use the Aquatics Facility.

9.4. City and School District shall mutually establish rules, regulations and policies, where necessary, including so called "pool rules," pertaining to the safe use of the pool and the Aquatics Facility in a cooperative manner. All formal pool rules shall be in accordance with the City's Aquatics Facility Manual, whereby it shall be in the best interest of both parties to

cooperate with each other in effectively operating and maintaining the Facility.

10. Reimbursements and Capital Repairs.

10.1. City shall reimburse School District for any repair or replacement of School District property, or the School District storage area or equipment damaged by City or damaged during the use of the Aquatics Facility by City or during City sponsored or approved activities. School District shall reimburse City for any repair or replacement of City property, equipment or fixtures damaged by School District or damaged during the School District's use of the Aquatics Facility or during use of the Aquatics Facility for any School District sponsored activity at the Aquatics Facility.

10.2. In the event that damage to the Aquatics Facility requiring repair or replacement does not arise from the negligence or willful misconduct of either party, and is of a type that under generally accepted accounting principles is to be capitalized or depreciated, the parties shall equally share the cost of such repair or replacement. The parties shall mutually determine when the cost of such repair or replacement will be incurred.

11. Insurance.

11.1. Each of the parties shall secure and maintain during the life of this agreement: statutory worker's compensation insurance with employer's liability policy limits in the amount of $1,000,000 for each incident for bodily injury, $1,000,000 for bodily injury by disease, and $1,000,000 for each employee for bodily injury by disease; commercial general liability insurance, including contractual liability for assumption of the tort liability under this agreement, and personal injury liability, with limits of not less than $10,000,000 per occurrence; and commercial automobile liability insurance for any owned, hired or non-owned autos, with a limit of not less than $1,000,000 each accident. Each party shall retain the option of discharging this obligation by means of funded self-insurance, or by membership and participation in a statutorily authorized public-entity insurance pool. Should coverage be provided on a claims-made basis, the reporting period for claims shall be written so that it can be extended for not less than two (2) years.

11.2. City shall secure and maintain property insurance coverage protecting the Aquatics Facility, including the structural portion of the School District's storage area, and any City personal property at the Aquatics Facility against all risk of physical damage and loss for its full replacement cost. School District shall obtain similar coverage for the personal property it maintains in the Aquatics Facility. School District and City hereby mutually waive their respective rights of recovery against each other for any loss insured by property insurance coverage existing for the benefit of the respective parties with the exception that City shall be entitled to any insurance proceeds received for damage loss to the swimming pool structure if the funds are not used to repair or rebuild the structure. City and School District shall provide at least thirty (30) days' notice of cancellation or material change in coverage. Each party shall list the other party as an additional insured on all applicable insurance policies. The parties agree to review annually the limits and types of insurance required herein and may, by mutual agreement, amend the requirements of this Section 11, as they deem necessary.

11.3. City's responsibility, whether by insurance or self-insurance, shall be primary or designated as primary in respect to the acts and omissions of its employees and its operation of the Aquatics Facility. School District's responsibility, whether by insurance or self-insurance, shall be primary or designated as primary in respect to the acts and omissions of its

employees and its operation or use of the Aquatics Facility.

12. Hold Harmless and Indemnification.

12.1. To extent permitted by law, City shall defend, indemnify and hold harmless School District, its officers, employees and agents, from and against any and all claims, demands, suits, actions or proceedings of any kind or nature, for damages to property or injuries to or death of any person or persons, including employees or agents of School District, and including, but not by way of limitation, worker's compensation claims, resulting from or arising out of the negligent or wrongful acts, errors or omissions of City, its officers, employees, agents, consultants, contractors or subcontractors. This paragraph 12.1 shall survive the termination of the Agreement.

12.2. To extent permitted by law, School District shall defend, indemnify and hold harmless City, its officers, employees and agents, from and against any and all claims, demands, suits, actions or proceedings of any kind or nature, for damages to property or injuries to or death of any person or persons, including employees or agents of City, and including, but not by way of limitation, worker's compensation claims, resulting from or arising out of the negligent or wrongful acts, errors or omissions of School District, its officers, employees, agents, students, guests, consultants, contractors or subcontractors. This paragraph 12.2 shall survive the termination of the Agreement.

12.3. In the event of any third party legal action against both School District and City, the parties agree to discuss and analyze the benefits of a common, mutual defense.

13. Expiration or Termination.

13.1. Unless renewed by mutual agreement of the parties, this Agreement and the license granted hereunder to School District to use the Aquatics Facility shall automatically terminate without further action required by either party on the yearly anniversary of the Commencement Date. However, if requested by City, School District shall execute and record an instrument evidencing the termination of the license granted under this Agreement.

13.2. In the event that the City fails to observe or perform any of the covenants, conditions and terms of this Agreement which are required to be observed or performed by City, where such failure shall continue for a period of thirty (30) days after written notice thereof from School District, then School District may terminate this Agreement within a 30-day period by any lawful means or proceed with whatever steps School District may deem necessary in order to enforce the rights and remedies available to School District under this Agreement, at law or equity, including, without limitation, the right of specific performance of this Agreement or the right to recover its damages from City.

13.3. In the event that School District fails to observe or perform any of the covenants, conditions and terms of this Agreement which are required to be observed or performed by School District, where such failure shall continue for a period of thirty (30) days after written notice thereof from City, then City may terminate this Agreement within a 30 day period by any lawful means or proceed with whatever steps City may deem necessary in order to enforce the rights and remedies available to City under this Agreement, at law or equity, including, without limitation, the right of specific performance of this Agreement of the right to recover its damages from School District.

13.4. Upon partial or complete termination of this Agreement, the Parties agree that all property will be returned to its original owner.

14. Assignment. This Agreement and the rights accorded to and the obligations required of the parties hereunder shall not be assigned, delegated, granted, conveyed or otherwise transferred to any third party without the express, written consent of the other party, and such assignment, delegation, grant, conveyance, or other transfer made by a party without the consent of the other party shall be deemed void and shall constitute good cause for the termination of this Agreement and the rights granted hereunder.

15. Nature of License to Use. The revocable license granted herein to School District is expressly intended *not* to run with the land or be appurtenant to the land upon which the Aquatics Facility is situated or Mingus Union High School is located, but is expressly intended to be personal for the benefit of the School District for the limited purposes stated herein.

16. No Third-party Beneficiaries. Failure to comply with the terms of this Agreement shall not provide the basis of any third party action against either of the parties, and there are no third party beneficiaries of this Agreement.

17. Lack of School District Funding. If funding is not available to School District pursuant to A.R.S. § 15-910 to discharge its financial obligations pursuant to this Agreement, the parties shall attempt to renegotiate the terms of this Agreement related to payment of utilities so as to establish or identify a source of funding for its payment obligations as set forth in this Agreement. In the event the School District cannot or does not meet its financial obligations to the City under this Agreement for the reasons stated herein, City shall have the right to immediately discontinue heating of the swimming pool and all other operations on the School District's behalf at the Aquatics Facility, and/or to terminate this Agreement and School District's license hereunder.

18. Execution and Recordation. This Agreement shall become effective as of September 6, 2016. The terms and conditions of this Agreement shall remain in full force and effect unless modified in writing by the parties.

19. Notice. Whenever a notice or other communication is required or permitted to be given, it shall be given in writing and delivered personally, or delivered by the postal service, certified mail, return receipt requested, to the other party at the address indicated below, or at such other address as may be designated by either party:

If to City:	City of Cottonwood 827 North Main Street Cottonwood, Arizona 86326
With a Copy to:	City of Cottonwood – City Attorney's Office 827 North Main Street Cottonwood, Arizona 86326
If to School District:	Mingus Union High School District Superintendent 1801 East Fir Street Cottonwood, Arizona 86326

20. Counterparts. This Agreement may be executed in one or more counterparts, each of which shall be deemed an original.

21. Conflict of Interest. This Agreement is subject to termination pursuant to A.R.S. § 38-511.

IN WITNESS WHEREOF, the parties have executed this Agreement by signing their names on the day and date first written above.

CITY OF COTTONWOOD	MINGUS UNION HIGH SCHOOL DISTRICT
By:_____	By:_____
Mayor	Board President

APPROVAL OF SCHOOL DISTRICT AND ATTORNEYS

The Undersigned hereby state that each has reviewed the proposed Intergovernmental Agreement between the City of Cottonwood and the Mingus Union High School District, and do declare the Agreement to be in proper form and within the powers and authority granted to their respective governing bodies under the law of the State of Arizona.

By:	By:
_____	_____
Cottonwood City Attorney	Attorney for Mingus Union High School District
_____	_____
Date	Date

City of Cottonwood, Arizona
City Council Agenda Communication

Print

Meeting Date:	September 6, 2016
Subject:	State of Arizona contract vehicle purchase
Department:	City Clerk
From:	Utilities - Roger Biggs

REQUESTED ACTION

Approval for the cooperative use of the State of Arizona contract, through the State of Arizona cooperative purchasing group, to provide the City of Cottonwood with Fleet Vehicles for the Utilities Department.

Staff is requesting that Council review and award the purchase of fleet vehicles from Courtesy Chevrolet via State of Arizona Cooperative Purchasing contract #ADSP012-016667.

SUGGESTED MOTION

If the Council desires to approve this item the suggested motion is:

“I move to approve the cooperative use of the State of Arizona contract #ADSP012-016667, through the State of Arizona cooperative purchasing group, for the purchase of five fleet vehicles for a total purchase price of $159,024.05."

BACKGROUND

While researching vehicle pricing to purchase five new vehicles for the Utilities Department, staff discovered that a State of Arizona Contract with Courtesy Chevrolet is available for cooperative use.

The City of Cottonwood is a member of the State of Arizona cooperative purchasing group, which allows the City of Cottonwood to access a contract resulting from a solicitation issued by the State of Arizona Procurement Office.

Staff researched state contract fleet vehicle pricing which will allow the City to purchase five (5) new vehicles, at discounted rates only offered to government entities. The City is able to utilize this contract to purchase

five (5) brand new vehicles at a price of $159,024.05 when $200,000.00 was budgeted for these five vehicles.

In the past staff has had to purchase used vehicles in order to stay within budget, but the use of this contract allows for the purchase of new vehicles within the Utility Department's budget for new vehicles.

The Utility Department vehicles being replaced will be distributed to the Public Works, IT and Community Development departments. This will allow some high mileage or high maintenance vehicles to be auctioned and removed from the City's fleet.

JUSTIFICATION/BENEFITS/ISSUES

In the past staff has had to purchase used vehicles in order to stay within budget, but the use of this contract allows for the purchase of new vehicles within the Utility Department's budget for new vehicles. The acquisition of new vehicles allows a longer life in the City's fleet and reduced operating and maintenance expenses.

The Utility Department vehicles being replaced will be distributed to Public Works, IT and Community Development departments. This will allow some high mileage or high maintenance vehicles to be auctioned and removed from the City's fleet.

COST/FUNDING SOURCE

These vehicles are budgeted items from Water/Wastewater funds for FY 2017.

ATTACHMENTS:		
Name:	Description:	Type:
Vehicles_New_Purchases_Statewide_Contract_Uniform_Terms.pdf	Statewide Contract Uniform Terms	Backup Material
20160719131049172.pdf	Vechile List	Cover Memo

1. Definition of Terms

As used in this Solicitation and any resulting Contract, the terms listed below are defined as follows:

1.1. *"Attachment"* means any item the Solicitation requires the Offeror to submit as part of the Offer.

1.2. *"Contract"* means the combination of the Solicitation, including the Uniform and Special Instructions to Offerors, the Uniform and Special Terms and Conditions, and the Specifications and Statement or Scope of Work; the Offer and any Best and Final Offers; and any Solicitation Amendments or Contract Amendments.

1.3. "*Contract Amendment"* means a written document signed by the Procurement Officer that is issued for the purpose of making changes in the Contract.

1.4. *"Contractor"* means any person who has a Contract with the State.

1.5. *"Days"* means calendar days unless otherwise specified.

1.6. *"Exhibit"* means any item labeled as an Exhibit in the Solicitation or placed in the Exhibits section of the Solicitation.

1.7. *"Gratuity"* means a payment, loan, subscription, advance, deposit of money, services, or anything of more than nominal value, present or promised, unless consideration of substantially equal or greater value is received.

1.8. "*Materials"* means all property, including equipment, supplies, printing, insurance and leases of property but does not include land, a permanent interest in land or real property or leasing space.

1.9. *"Procurement Officer"* means the person, or his or her designee, duly authorized by the State to enter into and administer Contracts and make written determinations with respect to the Contract.

1.10. *"Services"* means the furnishing of labor, time or effort by a contractor or subcontractor which does not involve the delivery of a specific end product other than required reports and performance, but does not include employment agreements or collective bargaining agreements.

1.11. *"Subcontract"* means any Contract, express or implied, between the Contractor and another party or between a subcontractor and another party delegating or assigning, in whole or in part, the making or furnishing of any material or any service required for the performance of the Contract.

1.12. *"State"* means the State of Arizona and Department or Agency of the State that executes the Contract.

1.13. *"State Fiscal Year"* means the period beginning with July 1 and ending June 30.

2. Contract Interpretation

2.1. Arizona Law. The Arizona law applies to this Contract including, where applicable, the Uniform Commercial Code as adopted by the State of Arizona and the Arizona Procurement Code, Arizona Revised Statutes (A.R.S.) Title 41, Chapter 23, and its implementing rules, Arizona Administrative Code (A.A.C.) Title 2, Chapter 7.

2.2. Implied Contract Terms. Each provision of law and any terms required by law to be in this Contract are a part of this Contract as if fully stated in it.

2.3. Contract Order of Precedence. In the event of a conflict in the provisions of the Contract, as accepted by the State and as they may be amended, the following shall prevail in the order set forth below:

2.3.1. Special Terms and Conditions;

2.3.2. Uniform Terms and Conditions;

2.3.3. Statement or Scope of Work;

2.3.4. Specifications;

2.3.5. Attachments;

2.3.6. Exhibits;

2.3.7. Documents referenced or included in the Solicitation.

2.4. Relationship of Parties. The Contractor under this Contract is an independent Contractor. Neither party to this Contract shall be deemed to be the employee or agent of the other party to the Contract.

2.5. Severability. The provisions of this Contract are severable. Any term or condition deemed illegal or invalid shall not affect any other term or condition of the Contract.

2.6. No Parole Evidence. This Contract is intended by the parties as a final and complete expression of their agreement. No course of prior dealings between the parties and no usage of the trade shall supplement or explain any terms used in this document and no other understanding either oral or in writing shall be binding.

2.7. No Waiver. Either party's failure to insist on strict performance of any term or condition of the Contract shall not be deemed a waiver of that term or condition even if the party accepting or acquiescing in the nonconforming performance knows of the nature of the performance and fails to object to it.

3. Contract Administration and Operation

3.1. Records. Under A.R.S. § 35-214 and § 35-215, the Contractor shall retain and shall contractually require each subcontractor to retain all data and other "records" relating to the acquisition and performance of the Contract for a period of five years after the completion of the Contract. All records shall be subject to inspection and audit by the State at reasonable times. Upon request, the Contractor shall produce a legible copy of any or all such records.

3.2. Non-Discrimination. The Contractor shall comply with State Executive Order No. 2009-09 and all other applicable Federal and State laws, rules and regulations, including the Americans with Disabilities Act.

3.3. Audit. Pursuant to ARS § 35-214, at any time during the term of this Contract and five (5) years thereafter, the Contractor's or any subcontractor's books and records shall be subject to audit by the State and, where applicable, the Federal Government, to the extent that the books and records relate to the performance of the Contract or Subcontract.

3.4. Facilities Inspection and Materials Testing. The Contractor agrees to permit access to its facilities, subcontractor facilities and the Contractor's processes or services, at reasonable times for inspection of the facilities or materials covered under this Contract. The State shall also have the right to test, at its own cost, the materials to be supplied under this Contract. Neither inspection of the Contractor's facilities nor materials testing shall constitute final acceptance of the materials or services. If the State determines non-compliance of the materials, the Contractor shall be responsible for the payment of all costs incurred by the State for testing and inspection.

3.5. Notices. Notices to the Contractor required by this Contract shall be made by the State to the person indicated on the Offer and Acceptance form submitted by the Contractor unless otherwise stated in the Contract. Notices to the State required by the Contract shall be made by the Contractor to the Solicitation Contact Person indicated on the Solicitation cover sheet, unless otherwise stated in the Contract. An authorized Procurement Officer and an authorized Contractor representative may change their respective person to whom notice shall be given by written notice to the other and an amendment to the Contract shall not be necessary.

3.6. Advertising, Publishing and Promotion of Contract. The Contractor shall not use, advertise or promote information for commercial benefit concerning this Contract without the prior written approval of the Procurement Officer.

3.7. Property of the State. Any materials, including reports, computer programs and other deliverables, created under this Contract are the sole property of the State. The Contractor is not entitled to a patent or copyright on those materials and may not transfer the patent or copyright to anyone else. The Contractor shall not use or release these materials without the prior written consent of the State.

3.8. Ownership of Intellectual Property. Any and all intellectual property, including but not limited to copyright, invention, trademark, trade name, service mark, and/or trade secrets created or conceived pursuant to or as a result of this contract and any related subcontract ("Intellectual Property"), shall be work made for hire and the State shall be considered the creator of such Intellectual Property. The agency, department, division, board or commission of the State of Arizona requesting the issuance of this contract shall own (for and on behalf of the State) the entire right, title and interest to the Intellectual Property throughout the world. Contractor shall notify the State, within thirty (30) days, of the creation of any Intellectual Property by it or its subcontractor(s). Contractor, on behalf of itself and any subcontractor(s), agrees to execute any and all document(s) necessary to assure ownership of the Intellectual Property vests in the State and shall take no affirmative actions that might have the effect of vesting all or part of the Intellectual Property in any entity other than the State. The Intellectual Property shall not be disclosed by contractor or its subcontractor(s) to any entity not the State without the express written authorization of the agency, department, division, board or commission of the State of Arizona requesting the issuance of this contract.

3.9. Federal Immigration and Nationality Act. The contractor shall comply with all federal, state and local immigration laws and regulations relating to the immigration status of their employees during the term of the contract. Further, the contractor shall flow down this requirement to all subcontractors utilized during the term of the contract. The State shall retain the right to perform random audits of contractor and subcontractor records or to inspect papers of any employee thereof to ensure compliance. Should the State determine that the contractor and/or any subcontractors be found noncompliant, the State may pursue all remedies allowed by law, including, but not limited to; suspension of work, termination of the contract for default and suspension and/or debarment of the contractor.

3.10 E-Verify Requirements. In accordance with A.R.S. § 41-4401, Contractor warrants compliance with all Federal immigration laws and regulations relating to employees and warrants its compliance with Section A.R.S. § 23-214, Subsection A.

3.11 Scrutinized Businesses. In accordance with A.R.S. § 35-391 and A.R.S. § 35-393, Contractor certifies that the Contractor does not have scrutinized business operations in Sudan or Iran.

3.12 Offshore Performance of Work Prohibited.
Any services that are described in the specifications or scope of work that directly serve the State of Arizona or its clients and involve access to secure or sensitive data or personal client data shall be performed within the defined territories of the United States. Unless specifically stated otherwise in the specifications, this paragraph does not apply to indirect or 'overhead' services, redundant back-up services or services that are incidental to the performance of the contract. This provision applies to work performed by subcontractors at all tiers.

4. Costs and Payments

4.1. Payments. Payments shall comply with the requirements of A.R.S. Titles 35 and 41, Net 30 days. Upon receipt and acceptance of goods or services, the Contractor shall submit a complete and accurate invoice for payment from the State within thirty (30) days.

4.2. Delivery. Unless stated otherwise in the Contract, all prices shall be F.O.B. Destination and shall include all freight delivery and unloading at the destination.

4.3. Applicable Taxes.

4.3.1. Payment of Taxes. The Contractor shall be responsible for paying all applicable taxes.

4.3.2. State and Local Transaction Privilege Taxes. The State of Arizona is subject to all applicable state and local transaction privilege taxes. Transaction privilege taxes apply to the sale and are the responsibility of the seller to remit. Failure to collect such taxes from the buyer does not relieve the seller from its obligation to remit taxes.

4.3.3. Tax Indemnification. Contractor and all subcontractors shall pay all Federal, state and local taxes applicable to its operation and any persons employed by the Contractor. Contractor shall, and require all subcontractors to hold the State harmless from any responsibility for taxes, damages and interest, if applicable, contributions required under Federal, and/or state and local laws and regulations and any other costs including transaction privilege taxes, unemployment compensation insurance, Social Security and Worker's Compensation.

4.3.4. IRS W9 Form. In order to receive payment the Contractor shall have a current I.R.S. W9 Form on file with the State of Arizona, unless not required by law.

4.4. Availability of Funds for the Next State fiscal year. Funds may not presently be available for performance under this Contract beyond the current state fiscal year. No legal liability on the part of the State for any payment may arise under this Contract beyond the current state fiscal year until funds are made available for performance of this Contract.

4.5. Availability of Funds for the current State fiscal year. Should the State Legislature enter back into session and reduce the appropriations or for any reason and these goods or services are not funded, the State may take any of the following actions:

4.5.1. Accept a decrease in price offered by the contractor;

4.5.2. Cancel the Contract; or

4.5.3. Cancel the contract and re-solicit the requirements.

5. Contract Changes

5.1. Amendments. This Contract is issued under the authority of the Procurement Officer who signed this Contract. The Contract may be modified only through a Contract Amendment within the scope of the Contract. Changes to the Contract, including the addition of work or materials, the revision of payment terms, or the substitution of work or materials, directed by a person who is not specifically authorized by the procurement officer in writing or made unilaterally by the Contractor are violations of the Contract and of applicable law. Such changes, including unauthorized written Contract Amendments shall be void and without effect, and the Contractor shall not be entitled to any claim under this Contract based on those changes.

5.2. Subcontracts. The Contractor shall not enter into any Subcontract under this Contract for the performance of this contract without the advance written approval of the Procurement Officer. The Contractor shall clearly list any proposed subcontractors and the subcontractor's proposed responsibilities. The Subcontract shall incorporate by reference the terms and conditions of this Contract.

5.3. Assignment and Delegation. The Contractor shall not assign any right nor delegate any duty under this Contract without the prior written approval of the Procurement Officer. The State shall not unreasonably withhold approval.

6. **Risk and Liability**

6.1. Risk of Loss: The Contractor shall bear all loss of conforming material covered under this Contract until received by authorized personnel at the location designated in the purchase order or Contract. Mere receipt does not constitute final acceptance. The risk of loss for nonconforming materials shall remain with the Contractor regardless of receipt.

6.2. Indemnification

6.2.1. Contractor/Vendor Indemnification (Not Public Agency) The parties to this contract agree that the State of Arizona, its departments, agencies, boards and commissions shall be indemnified and held harmless by the contractor for the vicarious liability of the State as a result of entering into this contract. However, the parties further agree that the State of Arizona, its departments, agencies, boards and commissions shall be responsible for its own negligence. Each party to this contract is responsible for its own negligence.

6.2.2. Public Agency Language Only Each party (as 'Indemnitor') agrees to indemnify, defend, and hold harmless the other party (as 'Indemnitee') from and against any and all claims, losses, liability, costs, or expenses (including reasonable attorney's fees) (hereinafter collectively referred to as 'claims') arising out of bodily injury of any person (including death) or property damage but only to the extent that such claims which result in vicarious/derivative liability to the Indemnitee, are caused by the act, omission, negligence, misconduct, or other fault of the Indemnitor, its officers, officials, agents, employees, or volunteers."

6.3. Indemnification - Patent and Copyright**.** The Contractor shall indemnify and hold harmless the State against any liability, including costs and expenses, for infringement of any patent, trademark or copyright arising out of Contract performance or use by the State of materials furnished or work performed under this Contract. The State shall reasonably notify the Contractor of any claim for which it may be liable under this paragraph. If the contractor is insured pursuant to A.R.S. § 41-621 and § 35-154, this section shall not apply.

6.4. Force Majeure.

6.4.1 Except for payment of sums due, neither party shall be liable to the other nor deemed in default under this Contract if and to the extent that such party's performance of this Contract is prevented by reason of force majeure. The term *"force majeure"* means an occurrence that is beyond the control of the party affected and occurs without its fault or negligence. Without limiting the foregoing, force majeure includes acts of God; acts of the public enemy; war; riots; strikes; mobilization; labor disputes; civil disorders; fire; flood; lockouts; injunctions-intervention-acts; or failures or refusals to act by government authority; and other similar occurrences beyond the control of the party declaring force majeure which such party is unable to prevent by exercising reasonable diligence.

6.4.2. Force Majeure shall not include the following occurrences:

6.4.2.1. Late delivery of equipment or materials caused by congestion at a manufacturer's plant or elsewhere, or an oversold condition of the market;

6.4.2.2. Late performance by a subcontractor unless the delay arises out of a force majeure occurrence in accordance with this force majeure term and condition; or

6.4.2.3. Inability of either the Contractor or any subcontractor to acquire or maintain any required insurance, bonds, licenses or permits.

6.4.3. If either party is delayed at any time in the progress of the work by force majeure, the delayed party shall notify the other party in writing of such delay, as soon as is practicable and no later than the following working day, of the commencement thereof and shall specify the causes of such delay in such notice. Such notice shall be delivered or mailed certified-return receipt and shall make a specific reference to this article, thereby invoking its provisions. The delayed party shall cause such delay to cease as soon as practicable and shall notify the other party in writing when it has done so. The time of completion shall be extended by Contract Amendment for a period of time equal to the time that results or effects of such delay prevent the delayed party from performing in accordance with this Contract.

6.4.4. Any delay or failure in performance by either party hereto shall not constitute default hereunder or give rise to any claim for damages or loss of anticipated profits if, and to the extent that such delay or failure is caused by force majeure.

6.5. Third Party Antitrust Violations. The Contractor assigns to the State any claim for overcharges resulting from antitrust violations to the extent that those violations concern materials or services supplied by third parties to the Contractor, toward fulfillment of this Contract.

7. Warranties

7.1. Liens. The Contractor warrants that the materials supplied under this Contract are free of liens and shall remain free of liens.

7.2. Quality. Unless otherwise modified elsewhere in these terms and conditions, the Contractor warrants that, for one year after acceptance by the State of the materials, they shall be:

7.2.1. Of a quality to pass without objection in the trade under the Contract description;

7.2.2. Fit for the intended purposes for which the materials are used;

7.2.3. Within the variations permitted by the Contract and are of even kind, quantity, and quality within each unit and among all units;

7.2.4. Adequately contained, packaged and marked as the Contract may require; and

7.2.5. Conform to the written promises or affirmations of fact made by the Contractor.

7.3. Fitness. The Contractor warrants that any material supplied to the State shall fully conform to all requirements of the Contract and all representations of the Contractor, and shall be fit for all purposes and uses required by the Contract.

7.4. Inspection/Testing. The warranties set forth in subparagraphs 7.1 through 7.3 of this paragraph are not affected by inspection or testing of or payment for the materials by the State.

7.5. Compliance With Applicable Laws. The materials and services supplied under this Contract shall comply with all applicable Federal, state and local laws, and the Contractor shall maintain all applicable license and permit requirements.

7.6. Survival of Rights and Obligations after Contract Expiration or Termination.

7.6.1. Contractor's Representations and Warranties. All representations and warranties made by the Contractor under this Contract shall survive the expiration or termination hereof. In addition, the parties hereto acknowledge that pursuant to A.R.S. § 12-510, except as provided in A.R.S. § 12-529, the State is not subject to or barred by any limitations of actions prescribed in A.R.S., Title 12, Chapter 5.

7.6.2. Purchase Orders. The Contractor shall, in accordance with all terms and conditions of the Contract, fully perform and shall be obligated to comply with all purchase orders received by the Contractor prior to the expiration or termination hereof, unless otherwise directed in writing by the Procurement Officer, including, without limitation, all purchase orders received prior to but not fully performed and satisfied at the expiration or termination of this Contract.

8. State's Contractual Remedies

8.1. Right to Assurance. If the State in good faith has reason to believe that the Contractor does not intend to, or is unable to perform or continue performing under this Contract, the Procurement Officer may demand in writing that the Contractor give a written assurance of intent to perform. Failure by the Contractor to provide written assurance within the number of Days specified in the demand may, at the State's option, be the basis for terminating the Contract under the Uniform Terms and Conditions or other rights and remedies available by law or provided by the contract.

8.2. Stop Work Order.

8.2.1. The State may, at any time, by written order to the Contractor, require the Contractor to stop all or any part, of the work called for by this Contract for period(s) of days indicated by the State after the order is delivered to the Contractor. The order shall be specifically identified as a stop work order issued under this clause. Upon receipt of the order, the Contractor shall immediately comply with its terms and take all reasonable steps to minimize the incurrence of costs allocable to the work covered by the order during the period of work stoppage.

8.2.2. If a stop work order issued under this clause is canceled or the period of the order or any extension expires, the Contractor shall resume work. The Procurement Officer shall make an equitable adjustment in the delivery schedule or Contract price, or both, and the Contract shall be amended in writing accordingly.

8.3. Non-exclusive Remedies. The rights and the remedies of the State under this Contract are not exclusive.

8.4. Nonconforming Tender. Materials or services supplied under this Contract shall fully comply with the Contract. The delivery of materials or services or a portion of the materials or services that do not fully comply constitutes a breach of contract. On delivery of nonconforming materials or services, the State may terminate the Contract for default under applicable termination clauses in the Contract, exercise any of its rights and remedies under the Uniform Commercial Code, or pursue any other right or remedy available to it.

8.5. Right of Offset. The State shall be entitled to offset against any sums due the Contractor, any expenses or costs incurred by the State, or damages assessed by the State concerning the Contractor's non-conforming performance or failure to perform the Contract, including expenses, costs and damages described in the Uniform Terms and Conditions.

9. Contract Termination

9.1. Cancellation for Conflict of Interest. Pursuant to A.R.S. § 38-511, the State may cancel this Contract within three (3) years after Contract execution without penalty or further obligation if any person significantly involved in initiating, negotiating, securing, drafting or creating the Contract on behalf of the State is or becomes at any time while the Contract or an extension of the Contract is in effect an employee of or a consultant to any other party to this Contract with respect to the subject matter of the Contract. The cancellation shall be effective when the Contractor receives written notice of the cancellation unless the notice specifies a later time. If the Contractor is a political subdivision of the State, it may also cancel this Contract as provided in A.R.S. § 38-511.

9.2. Gratuities. The State may, by written notice, terminate this Contract, in whole or in part, if the State determines that employment or a Gratuity was offered or made by the Contractor or a representative of the Contractor to any officer or employee of the State for the purpose of influencing the outcome of the procurement or securing the Contract, an amendment to the Contract, or favorable treatment concerning the Contract, including the making of any determination or decision about contract performance. The State, in addition to any other rights or remedies, shall be entitled to recover exemplary damages in the amount of three times the value of the Gratuity offered by the Contractor.

9.3. Suspension or Debarment. The State may, by written notice to the Contractor, immediately terminate this Contract if the State determines that the Contractor has been debarred, suspended or otherwise lawfully prohibited from participating in any public procurement activity, including but not limited to, being disapproved as a subcontractor of any public procurement unit or other governmental body. Submittal of an offer or execution of a contract shall attest that the contractor is not currently suspended or debarred. If the contractor becomes suspended or debarred, the contractor shall immediately notify the State.

9.4. Termination for Convenience. The State reserves the right to terminate the Contract, in whole or in part at any time when in the best interest of the State, without penalty or recourse. Upon receipt of the written notice, the Contractor shall stop all work, as directed in the notice, notify all subcontractors of the effective date of the termination and minimize all further costs to the State. In the event of termination under this paragraph, all documents, data and reports prepared by the Contractor under the Contract shall become the property of and be delivered to the State upon demand. The Contractor shall be entitled to receive just and equitable compensation for work in progress, work completed and materials accepted before the effective date of the termination. The cost principles and procedures provided in A.A.C. R2-7-701 shall apply.

9.5. Termination for Default.

9.5.1. In addition to the rights reserved in the contract, the State may terminate the Contract in whole or in part due to the failure of the Contractor to comply with any term or condition of the Contract, to acquire and maintain all required insurance policies, bonds, licenses and permits, or to make satisfactory progress in performing the Contract. The Procurement Officer shall provide written notice of the termination and the reasons for it to the Contractor.

9.5.2. Upon termination under this paragraph, all goods, materials, documents, data and reports prepared by the Contractor under the Contract shall become the property of and be delivered to the State on demand.

9.5.3. The State may, upon termination of this Contract, procure, on terms and in the manner that it deems appropriate, materials or services to replace those under this Contract. The Contractor shall be liable to the State for any excess costs incurred by the State in procuring materials or services in substitution for those due from the Contractor.

9.6. Continuation of Performance Through Termination. The Contractor shall continue to perform, in accordance with the requirements of the Contract, up to the date of termination, as directed in the termination notice.

10. Contract Claims

All contract claims or controversies under this Contract shall be resolved according to A.R.S. Title 41, Chapter 23, Article 9, and rules adopted thereunder.

11. Arbitration

The parties to this Contract agree to resolve all disputes arising out of or relating to this contract through arbitration, after exhausting applicable administrative review, to the extent required by A.R.S. § 12-1518, except as may be required by other applicable statutes (Title 41).

12. Comments Welcome

The State Procurement Office periodically reviews the Uniform Terms and Conditions and welcomes any comments you may have. Please submit your comments to: State Procurement Administrator, State Procurement Office, 100 North 15th Avenue, Suite 201, Phoenix, Arizona, 85007.

State Contract # ADSP012-016667 **July 16, 2016**

This quote is being submitted to City of Cottonwood by Ernie Vieane, fleet manager at Courtesy Chevrolet. If you have any questions please direct them to me at 602-604-3042 or email address; evieane@houseofcourtesy.com

Thank you, Ernie Vieane

Phase II (In Stock)

2016 Chevrolet 2WD ¾ Ton Regular Cab Service Body

$30,295.00
$500.00 Spray-In Liner
$600.00 Hitch with wiring
$2,635.79 Sales Tax
$5.00 Tire Tax
$34,035.79 Total Per Unit
3 @ $102,107.37

2016 Chevrolet Double ¾ Ton W/T

$27,995.00
$350.00 Spray-in liner
$2,382.64 Sales Tax
$5.00 Tire Tax
$30,732.64 Total

2016 Chevrolet Double Cab ½ Ton W/T

$23,395.00
$350.00 Spray-in liner
$400.00 Hitch with wiring
$2,034.04 Sales Tax
$5.00 Tire Tax
$26,184.04 Total

Includes Delivery to Cottonwood.

2016 SILVERADO 1500 2WD 1WT DBL GENERAL MOTORS LLC
GAZ SUMMIT WHITE /V6G
H2R JET BLACK / DARK ASH RENAISSANCE CENTER
ORDER NO. TCWMTZ/TRE STOCK NO. DETROIT MI 48243-1114
VIN 1GC RCNE H0 GZ220657 VEHICLE INVOICE 10D43961555
**********5456******13*39274S

MODEL & FACTORY OPTIONS	MSRP	INV AMT	RETAIL - STOCK
CC15753 SILVERADO 1500 2WD 1WT DB	30920.00	29374.00	INVOICE 02/18/16
C5H GVW RATING - 6,900 LBS	N/C	N/C	SHIPPED 02/18/16
FE9 50-STATE EMISSIONS	N/C	N/C	EXP I/T 03/04/16
LV3 ENGINE, 4.3L V6 ECOTEC3	N/C	N/C	INT COM 03/04/16
MYC TRANSMISSION, 6 SPD AUTOMATIC	N/C	N/C	PRC EFF 02/18/16

KEYS XXXXX XXXXX
WFP-S QTR OPT-1
BANK: JP MORGAN C
CHG-TO 39-274

SHIP WT: 4867
HP: 36.8
GVWR: 6900
GAWR.FT: 3850
GAWR.RR: 3950
EMPLOY: 29594.04
SUPPLR: 30769.00
NTR: 1/2
DAN: NONE
EMPINC: 1747.19
SUPINC: 572.23

TOTAL MODEL & OPTIONS	30920.00	29374.00	ACT 237	29641.40
DESTINATION CHARGE	1195.00	1195.00	H/B 261	927.60
DEALER IMR CONTRIBUTION		309.20	ADV 261	309.20
LMA GROUP CONTRIBUTION		309.20	EXP 65A	309.20
TOTAL	32115.00	31187.40	PAY 310	31187.40

MEMO: TOTAL LESS HOLDBACK AND
APPROX WHOLESALE FINANCE CREDIT 29796.00

****

INVOICE DOES NOT REFLECT DEALER'S ULTIMATE COST BECAUSE OF MANUFACTURER REBATES, ALLOWANCES, INCENTIVES, HOLDBACK, FINANCE CREDIT AND RETURN TO DEALER OF ADVERTISING MONIES, ALL OF WHICH MAY APPLY TO VEHICLE.

****

SANDS MOTOR COMPANY

City of Cottonwood, Arizona
City Council Agenda Communication

Print

Meeting Date:	September 6, 2016
Subject:	AZ Dept. of Emergency & Military Affairs Grant for Improvements to Railroad Wash @ Cottonwood Village
Department:	Development Services
From:	Robert Winiecke, City Engineer

REQUESTED ACTION

Approval of agreement to accept grant funding from the Arizona Department of Emergency and Military Affairs to make improvements to Railroad Wash in the vicinity of the Cottonwood Village Assisted Living Facility.

SUGGESTED MOTION

If the Council desires to approve this item the suggested motion is:

I move to accept the funding offer presented by the State or Arizona's Department of Emergency and Military Affairs,subject to approval of the final form of agreement by the City Attorney, and authorizing City Staff to proceed with the implementation of this project.

BACKGROUND

The City of Cottonwood performed a delineation study of Railroad Wash in 2014. The study resulted in FEMA issuing the community a Letter of Map Revision (LOMR) that provided for the removal of thirty five (35) parcels from the Special Flood Hazard Area (SFHA). An unfortunate consequence of this study was that ten (10) parcels were remapped into the SFHA based on the current FEMA guidelines/rules. As a result, the City requested that the design consultant prepare plans for improvement projects that would mitigate flooding and remove the remapped parcels from the SFHA. These plans were prepared and stamped by the consultant, and are shelf ready.

At the June 7, 2016 City Council Meeting I requested Council's support for applying for grant funding through FEMA under their Pre-Disaster Mitigation Grant Program. During my presentation, I mentioned that the State of Arizona's Department of Emergency and Military Affairs (AZDEMA) was considering our projects for an alternate source of funding that would be available more quickly, since the standard project duration through the PDM program is 3 years. Funding through the alternate source identified by AZDEMA has come through and AZDEMA has extended a funding commitment letter and agreement to the City of Cottonwood to make improvements to Railroad Wash in the vicinity of Cottonwood Village in the amount of $150,000.00 with a cost share of 75%/25%.

JUSTIFICATION/BENEFITS/ISSUES

Construction of the proposed improvement project to Railroad Wash will remove the Cottonwood Village Assisted Living Facility from the Special Flood Hazard Area. These proposed improvements will also reduce the potential for damage to this facility from flooding and further protect public safety.

COST/FUNDING SOURCE

Grant – State of Arizona Department of Emergency and Military Affairs (75%)

City Matching Funds (25% budgeted for the current Fiscal Year)

ATTACHMENTS:		
Name:	Description:	Type:
2016_0727_-_DEMA_Funding_Letter.pdf	Funding Commitment Letter	Backup Material
DEMA_Agreement.pdf	AZ DEMA Agreement	Backup Material

STATE OF ARIZONA
DEPARTMENT OF EMERGENCY AND MILITARY AFFAIRS

5636 East McDowell Road
Phoenix, Arizona 85008-3495
(602) 267-2700 DSN: 853-2700

Douglas A. Ducey
GOVERNOR

Major General Michael T. McGuire
THE ADJUTANT GENERAL

July 27, 2016

Robert Winiecke
Town of Cottonwood
1940 W. Mingus Ave.
Cottonwood, AZ 86326

Re: PCA 73035; FY16 Mitigation Projects
Town of Cottonwood

Mr. Winiecke,

This letter is to notify you that the Town of Cottonwood has been awarded funding from the Governor's Emergency Fund for projects presented to the State Emergency Council on June 6, 2016. The Town's request of a $150,000.00 award, with a 75/25% State/local cost share has been awarded. Based on the current FY2016 balance at the end of the fiscal year, Town's Cottonwood Village Drainage project will be funded as per the Council's approval.

Enclosed for your signature is the disaster assistance agreement for the above referenced mitigation projects. Please sign and return the original agreement to my attention. Once returned and signed by our office, I will forward a copy to you for your files. A project specialist from our office will then contact you to begin developing a project worksheet.

If you have any questions or would like further clarification of any of the information presented within this letter, please contact me directly at (602) 464-6232 or rebecca.trayler@azdema.gov.

Sincerely,

Rebecca Trayler
Infrastructure Coordinator
Arizona Department of Emergency and Military Affairs

DISASTER ASSISTANCE AGREEMENT FOR STATE PROCLAMATIONS
(Political Subdivisions)

This Agreement between the Department of Emergency and Military Affairs, Division of Emergency Management, State of Arizona ("Division"), and the TOWN OF COTTONWOOD ("Applicant") shall be effective on the date signed by both parties. This agreement shall apply to all assistance funds provided by the State to the Applicant as a result of actions taken by the STATE EMERGENCY COUNCIL, and awarding FY16 HAZARD MITIGATION FUNDS.

The designated representative of the Applicant certifies that:

1. He/She has legal authority, as outlined in the designation form, to apply for assistance on behalf of the Applicant.

2. The Applicant is an eligible entity as defined in A.A.C. R8-2-301

3. Any change to the Applicant's designated representative or their contact information must be provided to Division in writing.

4. The Applicant shall provide all necessary financial and managerial resources to meet the terms and conditions of receiving State disaster assistance. The Division does manage or oversee the applicant's project(s).

5. The Applicant understands this is a reimbursement program and the Applicant must expend its own funds for the approved project prior to being reimbursed by the Division. The Division will not pre-approve a project for reimbursement prior to commencement of repairs at the Applicant's own expense. Partial payments can be processed as work is completed and costs expended. Final payment will be made after work is completed and claimed costs have been audited. (A.A.C. § R8-2-316)

6. The Applicant shall establish and maintain a proper accounting system to record expenditures of disaster assistance funds in accordance with generally accepted accounting standards or as directed by the Division's Governor's Authorized Representative (GAR) or Alternate GAR to ensure compliance with audit requirement. (A.A.C. § R8-2-316)

7. The Applicant shall, upon request of the Governor's Authorized Representative (or designee), cooperate with Division personnel in performing interim and/or final inspections of the project site.

8. The Applicant shall comply with all applicable current codes and standards, including but not limited to fire, building and construction, during completion of eligible repair or replacement work on eligible damaged public facilities.

9. The Applicant shall comply with any mitigation requirements approved by the Division for repair or replacement projects subject to repeated damages from flooding or other hazards. (A.A.C. § R8-2-314)

DISASTER ASSISTANCE AGREEMENT FOR STATE PROCLAMATIONS
(Political Subdivisions)

10. The Applicant shall comply with all applicable provisions of State laws and regulations in regard to procurement of goods and services and to contracts for repair or restoration of eligible public facilities including, but not limited to: A.A.C. Title 8, Chapter 2, Article 3.

11. The Applicant shall comply with all existing State and Federal laws, rules or requirements or those enacted during the duration of this agreement, including those involving the environment (NEPA; National Environmental Protection Act).

12. The Applicant shall comply with provisions of the Hatch Act limiting the political activities of public employees.

13. The Applicant shall comply with the flood insurance purchase requirements which may be required by the Arizona Department of Water Resources Floodplain Management Program.

14. The Applicant shall not enter into cost-plus-percentage-of-cost contracts for completion of disaster restoration or repair work. (A.R.S. § 41-2544) A cost-reimbursement contract may be used only if a determination is made in writing that such contract is likely to be less costly to this state than any other type or that it is impracticable to obtain the materials, services or construction required except under such a contract.

15. The Applicant shall not enter into contracts for which payment is contingent upon approval of project or receipt of State funds. (A.R.S. § 41-2546)

16. In accordance with the Arizona Procurement Code, Rule R2-7-C907, the Applicant shall not enter into any contract with any party that is debarred or suspended from participating in State assistance programs.

17. The Applicant shall comply with cost-sharing requirements of State disaster assistance; specifically, that State assistance is limited to 75% of total eligible expenditures. The Applicant is responsible for the remaining 25% share of total eligible costs, as outlined in A.A.C. R8-2-306(D).

18. The Applicant shall use disaster assistance funds solely for the purposes for which these funds are provided and as approved by the Governor's Authorized Representative.

19. The Applicant shall return to the State, within two months of such request by the Governor's Authorized Representative, any partial reimbursement not supported by audit or other Division review of documentation maintained by the Applicant. (A.A.C. § R8-2-319)

DISASTER ASSISTANCE AGREEMENT FOR STATE PROCLAMATIONS
(Political Subdivisions)

20. The Applicant understands and will abide by the following Time Limits for Filing Claims:

Permanent Work (required to restore a damaged facility, through repair or restoration, to its pre-disaster design, function, and capacity in accordance with applicable codes and standards). (A.A.C. § R-8-2-309 (b))	**9/22/16**
All required information pertaining to the accurate development, review and approval of Project Worksheets identified, must be provided to the Division by the applicant within 6 months from the date of declaration. Any information not received within that time frame will not be considered as eligible costs reimbursable under the declared event, with the exception of hidden damages discovered after construction begins. A.A.C § R-8-2-309 (d))	**12/30/2016**

21. Time extensions for project completion will be granted due to conditions or causes which are beyond Applicant's control. Requests for time extensions must be submitted in writing prior to work completion deadline date. Requests must demonstrate extenuating circumstances or unusual project requirements supporting the request and include a projected completion date and revised project completion timeline.

22. None of the provisions of the Agreement may be waived, changed or altered except in writing signed by both parties.

23. Notwithstanding any provision of the Agreement to the contrary, the Division is not authorized to indemnify Contractor.

24. Every payment obligation of the Division under this Agreement is conditioned upon the availability of funds appropriated and allocated for the payment of such obligation. If funds are not appropriated, allocated and available or if the appropriation is changed by the legislature resulting in funds no longer being available for the continuance of this Agreement, this Agreement may be terminated by the Division or any other agency of the State of Arizona at the end of the period for which funds are available. No liability shall accrue to the Division or any other agency of the State of Arizona in the event this provision is exercised, and neither the Division nor any other agency of the State of Arizona shall be obligated or liable for any future payments or for any damages as a result of termination under this paragraph.

25. Pursuant to A.R.S. § 35-214 and A.R.S. § 35-215, the Contractor shall retain all records relating to this Agreement for a period of five years after completion of the Agreement. All records shall be subject to inspection and audit by the State of Arizona at reasonable times. Upon request, the Contractor shall produce the original of any or all such records at the offices of the Division.

DISASTER ASSISTANCE AGREEMENT FOR STATE PROCLAMATIONS
(Political Subdivisions)

26. In accordance with A.R.S. § 41-151, the Applicant shall maintain for three years from the applicant's final audit all records relating to claims submitted by the applicant and shall make the records available for inspection and audit by the Department auditor and the auditor general.

27. The requirements of A.R.S. § 38-511 apply to this Agreement. The Division, may cancel this Agreement, without penalty or further obligation, if any person significantly involved in initiating, negotiating, securing, drafting or creating this Agreement on behalf of the Division is, at any time while this Agreement or any extension is in effect, an employee, agent or consultant of Contractor with respect to the subject matter of this Agreement.

28. Contractor shall comply with Executive Order 2009-9, which mandates that all persons, regardless of race, color, religion, sex, age, or national origin not mentioned in Order shall have equal access to employment opportunities, and all other applicable state and Federal employment laws, rules, and regulations, including the Americans with Disabilities Act. Contractor shall take affirmative action to ensure that applicants for employment and employees are not discriminated against due to race, creed, color, religion, sex, national origin or disability.

29. Scrutinized Business Operations. Pursuant to A.R.S. § 35-391.06 and A.R.S. § 35-393.06, the Contractor certifies that it does not have a scrutinized business operation in Sudan or Iran. For the purpose of this Section the term "scrutinized business operations" shall have the meanings set forth in A.R.S. § 35-391 and A.R.S. § 35-393, as applicable. If the State of Arizona or the Division determines that the Contractor submitted a false certification, the Division may impose remedies as provided by law including cancellation or termination of this Agreement.

30. Contractor assigns to the Division any claim for overcharges resulting from antitrust violations to the extent that such violations concern materials or services supplied by third parties to Contractor toward fulfillment of this Agreement.

31. This Agreement shall be construed in accordance with the laws of the State of Arizona.

32. The parties to this Agreement agree to resolve all disputes arising out of or relating to this Agreement through arbitration, after exhausting applicable administrative review, to the extent required by A.R.S. § 12-1518 except as may be required by other applicable statutes.

33. Applicant shall report to the Division quarterly regarding the progress of any project(s) until the project(s) is 100% complete.

34. Any and all cost overruns must be presented to the Division in writing and be approved by the Division prior to reimbursement.

DISASTER ASSISTANCE AGREEMENT FOR STATE PROCLAMATIONS
(Political Subdivisions)

35. The file number for this Governor's Proclamation is PCA 73035.

Designee/Applicant Agent:

Applicant Agent Name	Title
Signature	Date

Division:

Will Schulz Assistant Director, Grant Administration	Alternate Governor's Authorized Representative Title
Signature	Date

City of Cottonwood, Arizona
City Council Agenda Communication

Print

Meeting Date:	September 6, 2016
Subject:	**Yavapai County Flood Control District Intergovernmental Agreement - Citywide Drainage Master Plan**
Department:	Development Services
From:	Robert Winiecke, City Engineer

REQUESTED ACTION

Staff is requesting that Council approve an Intergovernmental Agreement (IGA) with Yavapai County Flood Control District (YCFCD) for the completion of the City wide Drainage Master Plan.

SUGGESTED MOTION

If the Council desires to approve this item the suggested motion is:

I move to adopt Resolution #2851, approving an Intergovernmental Agreement (IGA) with Yavapai County Flood Control District to complete the City wide Drainage Master Plan currently in progress and authorize the mayor to execute the agreement on the City's behalf, subject to approval of the final form of agreement by the City Attorney.

BACKGROUND

At the regular meeting of the City Council on September 2, 2014 the Council approved an IGA with YCFCD and in the agreement the County agreed to reimburse the City for the costs associated with a City wide Drainage Master Plan. The original IGA was for $200,000 in fiscal year 2014-15 and another $200,000 in FY 2015-16. After discussions with the YCFCD it was suggested to move the entire $400,000 into FY 2015-16.

The City approved a contract with Shepard Wesnitzer, Inc. on September 15, 2015 to perform this study. Based upon the scope of the project it was determined to be infeasible to complete the all of the work by the end of fiscal year 2015-2016. Since the project was going to extend beyond FY 2015-16 the YCFCD suggested to move a portion of the money into FY 2016-17. This new IGA approves the remainder of the project funding up to $220,000 to be available during FY2016-17 so the City can finalize the Drainage Master Plan and request reimbursement for the work performed by Shepard Wesnitzer, Inc. as the work progresses.

JUSTIFICATION/BENEFITS/ISSUES

Knowing the existing stormwater runoff flows would be beneficial for design of new drainage infrastructure

and redevelopment of existing structures.

Combining the results of the mapping and the existing stormwater runoff flows, the City will be able to identify drainage system deficiencies and create future improvement projects as funding becomes available.

A city wide drainage study allows for property owners within City limits to better understand the flood hazards as well as help City staff plan for mitigating flood hazards.

This new IGA will allow the City to draw against the remainder of funds originally earmarked by the YCFCD for the completion of the City wide Drainage Master Plan.

COST/FUNDING SOURCE

Grant from Yavapai County Flood Control District

ATTACHMENTS:		
Name:	Description:	Type:
res2851.docx	Resolution Number 2871	Cover Memo
Cottonwood_Citywide_Drainage_IGA_2016-17.pdf	IGA	Backup Material

RESOLUTION NUMBER 2851

A RESOLUTION OF THE MAYOR AND CITY COUNCIL OF THE CITY OF COTTONWOOD, YAVAPAI COUNTY, ARIZONA, APPROVING AN INTERGOVERNMENTAL AGREEMENT WITH THE YAVAPAI COUNTY FLOOD CONTROL DISTRICT, FOR FINANCIAL CONTRIBUTION TO THE CITY FOR FLOOD CONTROL IMPROVEMENTS FOR THE FISCAL YEAR 2016/2017.

WHEREAS, the Yavapai County Flood Control District ("District") is a special taxing district legally created in the State of Arizona and organized by Yavapai County to include and govern its jurisdiction; and

WHEREAS, a portion of the City lies within the legal boundaries of the Flood Control District; and

WHEREAS, the District and the City have authority to enter into Intergovernmental Agreements pursuant to Arizona Revised Statutes ("A.R.S.") §§11-952, 48-3603, and 9-240; and

WHEREAS, the District has approved and budgeted funds to provide funding assistance for flood mitigation work and is authorized to expend such funds for flood control projects (including storm water control) to political subdivisions for projects so long as the projects are flood or drainage related, cost-effective, a benefit to the County, the District and the political subdivision and are in accordance with FEMA regulations; and

WHEREAS, the City has experienced storm water control and flooding problems for a number of years in various locations and seeks to mitigate such problems to increase safety and protect public and private property and persons within the City and seeks to improve its storm water control, make drainage improvements, and/or mitigate flooding problems by conducting a city-wide Drainage Study and Improvements Project; and

WHEREAS, the District has budgeted funds to support the project in an amount not to exceed $220,000 for fiscal year 2016-2017, said request for funding by the city to take place on or before July 31, 2017.

NOW, THEREFORE, BE IT RESOLVED BY THE MAYOR AND CITY COUNCIL OF THE CITY OF COTTONWOOD, YAVAPAI COUNTY, ARIZONA:

THAT, the Intergovernmental Agreement with the Yavapai County Flood Control District to provide funds in an amount not to exceed $220,000 for the City to conduct a city-wide Drainage Study and Improvements Project is hereby approved .

PASSED AND ADOPTED BY THE CITY COUNCIL AND APPROVED BY THE MAYOR OF THE CITY OF COTTONWOOD, YAVAPAI COUNTY, ARIZONA, THIS 6TH DAY OF SEPTEMBER 2016.

_____
Diane Joens, Mayor

APPROVED AS TO FORM:

_____
Steven B. Horton, Esq.
City Attorney

ATTEST:

_____
Marianne Jiménez, City Clerk

INTERGOVERNMENTAL AGREEMENT

BETWEEN
THE YAVAPAI COUNTY FLOOD CONTROL DISTRICT
AND THE CITY OF COTTONWOOD
FOR THE FISCAL YEAR 2016/2017 FINANCIAL CONTRIBUTION
FROM THE DISTRICT TO THE CITY FOR
FLOOD CONTROL IMPROVEMENTS

THIS INTERGOVERNMENTAL AGREEMENT BY AND BETWEEN THE YAVAPAI COUNTY FLOOD CONTROL DISTRICT AND THE CITY OF COTTONWOOD, FOR THE FISCAL YEAR 2016/2017 FINANCIAL CONTRIBUTION TO THE CITY FOR FLOOD CONTROL IMPROVEMENTS (the "Agreement") is entered into, effective this _____ day of _____, 2016, between the Yavapai County Flood Control District, a political subdivision of the State of Arizona (the "DISTRICT"), and the City of Cottonwood, Arizona, a municipal corporation of the State of Arizona (the "CITY"). The District and the City are sometimes collectively referred to as the "Parties" or individually as the "Party."

RECITALS

WHEREAS:

A. The DISTRICT is a special taxing district legally created in the State of Arizona and organized by Yavapai County to include and govern its jurisdiction.

B. The DISTRICT administers the Federal Emergency Management Agency ("FEMA") Regulations under the National Flood Insurance Program.

C. The Yavapai County Board of Supervisors is the Board of Directors of the DISTRICT.

D. A portion of the CITY lies within the legal boundaries of the DISTRICT.

E. The DISTRICT, the CITY, and the County are separate and distinct political subdivisions, but each can provide for the benefit of the other(s), for the benefit of public health, safety, and welfare, and other public purposes.

F. The DISTRICT and the CITY have authority to enter into Intergovernmental Agreements pursuant to Arizona Revised Statutes ("A.R.S.") §§11-952, 48-3603, and 9-240, and CITY's Code.

G. Among other things, the DISTRICT receives tax proceeds as general funding for the planning, construction, and maintenance of flood control improvements.

H. Under the budgeting process for the DISTRICT, a category of "Contributions" (hereinafter "Funds") has been established, setting aside monies that may be utilized by the various political subdivisions located within the boundaries of Yavapai County.

I. The DISTRICT has approved and budgeted Funds to provide funding assistance for flood mitigation work and is authorized to expend such funds for flood control projects (including storm water control) to political subdivisions for projects so long as the projects are flood or drainage related, cost-effective, a benefit to the County, the DISTRICT, and the political subdivision and are in accordance with FEMA regulations.

J. The CITY has experienced storm water control and flooding problems for a number of years in various locations and seeks to mitigate such problems to increase safety and protect public and private property and persons within the CITY.

K. The CITY seeks to improve its storm water control, make drainage improvements, and/or mitigate flooding problems by completing the Citywide Drainage Study and Improvements Project (hereinafter the "Project").

L. The CITY desires to receive DISTRICT Funds for the 2016/2017 fiscal year to be used for its Project.

M. The DISTRICT has budgeted Funds to support the Project in an amount not to exceed Two Hundred Twenty Thousand Dollars ($220,000) for fiscal year 2016/2017 which begins on July 1, 2016.

AGREEMENTS

NOW THEREFORE, for good and valuable consideration, including consideration of the mutual promises, terms, and conditions hereinafter set forth, including the mutual promises and obligations to be performed by the Parties hereto, IT IS AGREED BETWEEN THE CITY AND THE DISTRICT AS FOLLOWS:

I. PURPOSE

The purpose of this Agreement is to authorize the DISTRICT to pay and contribute to the CITY Funds in support of the CITY's Project. Such funding for fiscal year 2016/2017 shall not exceed Two Hundred Twenty Thousand Dollars ($220,000).

II. COMMENCEMENT, DURATION, AND TERMINATION

The effective date is as set forth on page one (1) of this Agreement. Performance under this Agreement shall commence following the effective date and shall terminate upon the earliest of:

A. The completion of the Project as determined by the CITY;
B. The exhaustion of the Funds allocated to the CITY for the Project;
C. The end of the fiscal year 2016/2017; or
D. The mutual agreement of the Parties.

III. RESPONSIBILITIES OF PARTIES

A. The CITY shall:

1. Be solely responsible for the design, engineering, bidding, right-of-way acquisition, supervision, construction, inspection, administration and project management of the Project and for contracting directly for all Project work.
2. If plans are used to bid, provide the DISTRICT a copy of the final Project plans.
3. Use the Funds for the Project in fiscal year 2016/2017.
4. Use the Funds exclusively for costs associated with the Project described above.
5. When requesting Funds from the DISTRICT, provide detailed invoices with supporting documentation for the request(s).
6. Request Funds from the DISTRICT on or before July 31, 2017 (for work completed in fiscal year 2016/2017).
7. Be responsible for the proper disbursement of the Funds provided by the DISTRICT.
8. Be responsible for maintaining the Project and the resulting improvements.

B. The DISTRICT shall:

1. Make Funds available to the CITY for the Project as approved by the Board of Directors.
2. Provide funding as available and appropriate upon proper request(s) by the CITY.
3. Pay properly invoiced requests monthly or on an alternate schedule as agreed to by the CITY and DISTRICT.
4. Pay properly invoiced requests for work completed by the CITY in fiscal year 2016/2017 so long as CITY's requests are received by the DISTRICT on or before July 31, 2017.

C. The DISTRICT and CITY mutually agree:

1. That they recognize the Funds to be used by Parties pursuant to this Agreement are tax funds. The agreements herein for funding are based upon projected tax funds to be received. In the event the projected income is not received, there is the possibility that some or all of the Funds anticipated by this Agreement and set forth herein will not be available. All monetary obligations under this agreement shall be subject to annual budget approval of the respective governing bodies of the parties. A failure of either party's governing body to approve funding for payment of any obligation hereunder shall constitute grounds for termination of this agreement.

2. The Project is the sole responsibility of the CITY, and not of the DISTRICT or the County. All real property upon with the Project work will occur is within the CITY limits and not owned or under the control of the DISTRICT or County.

VII. INDEMNIFICATION

The CITY agrees to defend, indemnify, and hold harmless the DISTRICT, its Board of Directors, the County, its Board of Supervisors, officers, employees, agents, or other representatives from any and all claims for damages or otherwise arising under this Agreement and from any negligent acts of the City, its officers, employees, agents, or other representatives. This Indemnification provision shall survive the termination of this Agreement.

VIII. OTHER PROVISIONS

A. NOTICE. All notices or demands upon any party to this Agreement shall be in writing and shall be delivered in person or sent by certified mail, return receipt requested, addressed as follows:

CITY OF COTTONWOOD	DISTRICT
City Manager	Yavapai County Flood Control District Director
827 North Main Street	1120 Commerce Drive
Cottonwood, AZ 86326	Prescott, AZ 86305

B. ENTIRE AGREEMENT. This Agreement represents the entire understanding between the parties with respect to the subject matters herein, and may be amended, modified, or waived only by written instrument signed by both Parties.

C. CONFLICT OF INTEREST. This contract is subject to the cancellation provisions of A.R.S. §38-511.

D. SEVERABILITY. In case one or more of the provisions contained in this Agreement shall for any reason be held to be invalid, illegal, or unenforceable in any respect, such invalidity, illegality, or unenforceability shall not affect any other provision thereof and this Agreement shall be construed as if such invalid, illegal, or unenforceable provision had never been contained therein.

E. NON-DISCRIMINATION. The Parties shall comply with Executive Order 2009-09, which mandates that all persons, regardless of race, color, religion, sex, age, national origin or political affiliation, shall have equal access to employment opportunities, and all other applicable State and Federal employment laws, rules and regulations, including the Americans with Disabilities Act. The Parties shall take affirmative action to ensure that applicants for employment and employees are not discriminated against due to race, creed, color, religion, sex, national origin or disability.

F. EMPLOYMENT VERIFICATION. The Parties are required to comply with A.R.S. §41-4401, and hereby warrants that they will, at all times during the term of this Agreement, comply with all federal immigration laws applicable to the employment of their respective employees, the requirements of A.R.S. §41-4401, and with the e-verification requirements of A.R.S. §23-214(A) (together the "state and federal immigration laws"). The Parties further agree to ensure that each subcontractor that performs any work under

this Agreement likewise complies with the state and federal immigration laws. A breach of a warranty regarding compliance with the state and federal immigration laws shall be deemed a material breach of the Agreement and the party who breaches may be subject to penalties up to and including termination of the Agreement. The Parties retain the legal right to inspect the papers of any contractor or subcontract employee working under the terms of the Agreement to ensure that the other party is complying with the warranties regarding compliance with the state and federal immigration laws.

G. LAWS. The Parties shall each be fully responsible for compliance with all statutes ordinances, codes, regulations, rules, court decrees, or other laws (hereinafter "Laws") applicable to it as part of fully performing the Project with regards to their respective roles. This Agreement shall not relieve either Party of any obligation or responsibility imposed upon it by Laws.

IN WITNESS WHEREOF, the parties hereto have executed this Agreement on the date and year specified below.

YAVAPAI COUNTY FLOOD CONTROL DISTRICT	CITY OF COTTONWOOD
_____	_____
Jack R. Smith, Chairman Date Board of Directors Yavapai County Flood Control District	Diane Joens, Mayor Date City of Cottonwood

ATTEST:

_____	_____
Kim Kapin Date Clerk of the Board of Directors	Date Cottonwood City Clerk

DETERMINATIONS OF COUNSEL

FOR THE
INTERGOVERNMENTAL AGREEMENT

BETWEEN
THE YAVAPAI COUNTY FLOOD CONTROL DISTRICT
AND THE CITY OF COTTONWOOD

FOR THE FISCAL YEAR 2016/2017 FINANCIAL CONTRIBUTION
FROM THE DISTRICT TO THE CITY FOR FLOOD CONTROL IMPROVEMENT

Pursuant to A.R.S. §11-952, as amended, the foregoing Agreement has been submitted to the undersigned Attorney City of Cottonwood. The undersigned has determined that this Agreement is in proper form and is within the powers and authority granted under the laws of the State of Arizona and the City of Cottonwood.

_____

Attorney Date
City of Cottonwood

Pursuant to A.R.S. §11-952, as amended, the foregoing Agreement has been submitted to the undersigned Attorney for the Yavapai County Flood Control District, Prescott, Arizona. The undersigned has determined that this Agreement is in proper form and is within the powers and authority granted under the laws of the State of Arizona to the Yavapai County Flood Control District.

_____

Deputy County Attorney Date
Flood Control District

City of Cottonwood, Arizona
City Council Agenda Communication

Print

Meeting Date:	September 6, 2016
Subject:	Abandonment of City Right-of-Way and Acceptance of Related/Substitute Public Utilities Easement.
Department:	Development Services
From:	Morgan Scott, Development Services Manager

REQUESTED ACTION

Consider approval of Resolution authorizing the abandonment of a portion of a City right-of-way and acceptance of a related/substitute Public Utilities Easement (PUE).

SUGGESTED MOTION

If the Council desires to approve this item the suggested motion is:

"I move to approve Resolution Number 2853, abandoning a portion of encroached-upon City right-of-way; and accept the related public utility easement as presented."

BACKGROUND

The City received a request to consider abandoning a portion of City right-of-way in old town between North 3rd Street and North 4th Street, adjacent to 1050 North 4th Street. A house was built 9 feet into the right-of-way in 1987 which would make the right-of-way difficult to fully utilize. In exchange for abandoning the right-of-way, the owners, the Green Family Trust, proposed to dedicate a Public Utility Easement of similar dimension on the south end of their property less than 40 feet away from the right-of-way to be abandoned. Attached is a depiction of the areas being discussed as well as legal descriptions of the properties.

Arizona Revised Statutes (ARS) Sections 28-7202 and 28-7205 allow the City to abandon roadways or portions thereof that it determines are no longer necessary for public use.

JUSTIFICATION/BENEFITS/ISSUES

-The abandonment the right-of-way segment and acceptance of a substitute public utilities easement will not hinder future City utility projects as the ROW is not currently being used for roadway purposes and is not anticipated to be required for such purposes in the future; and the easement that is being dedicated to the City is sufficient for the City's anticipated future utility needs.

-The trade will allow the property owner to sell the property without the house encroaching into a city right-of-way.

COST/FUNDING SOURCE

The property owner has agreed to pay the costs associated with surveying the existing right-of-way and the PUE that the City will receive.

ATTACHMENTS:		
Name:	Description:	Type:
Exhibit_for_Staff_report__8-23-16.docx	exhibit	Cover Memo
Exhibit_A__rightofway_to_be_abandoned__800-14-003D.pdf	RoW abandonment Legal	Cover Memo
Exhibit_B__PUE_dedicated_to_the_City__15-1003CSX__8-5-16.pdf	Public Utility Easement	Cover Memo
Exhibit_B__PUE_dedicated_to_the_City__15-1003CSX.pdf	PUE Lega	Cover Memo
Res2853.docx	Resolution Number 2853	Cover Memo

Graphic Depiction of Land and Easements to be traded

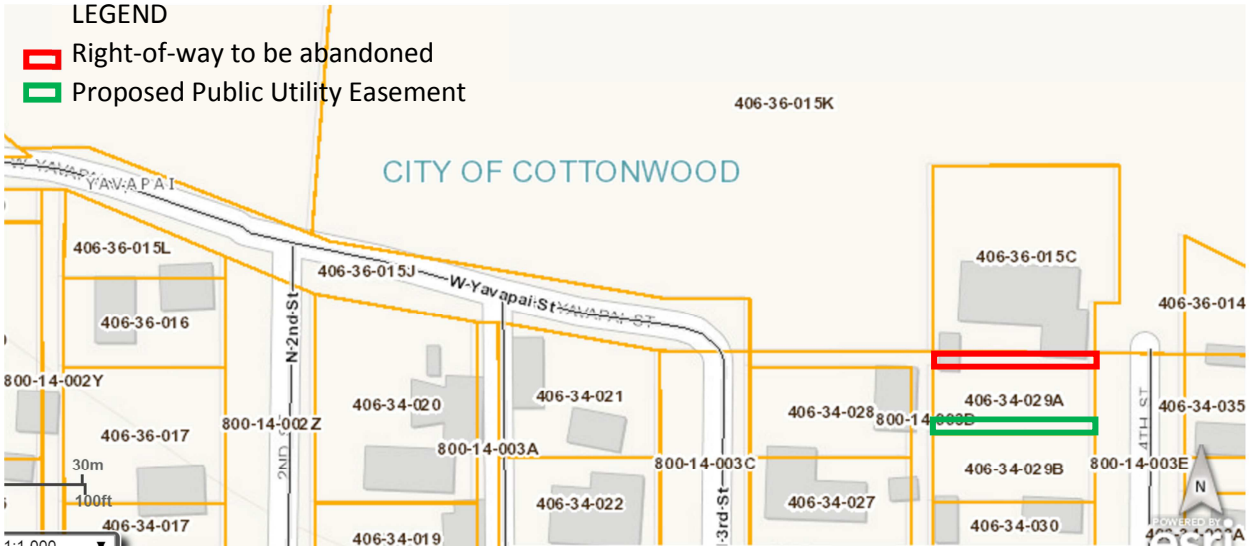

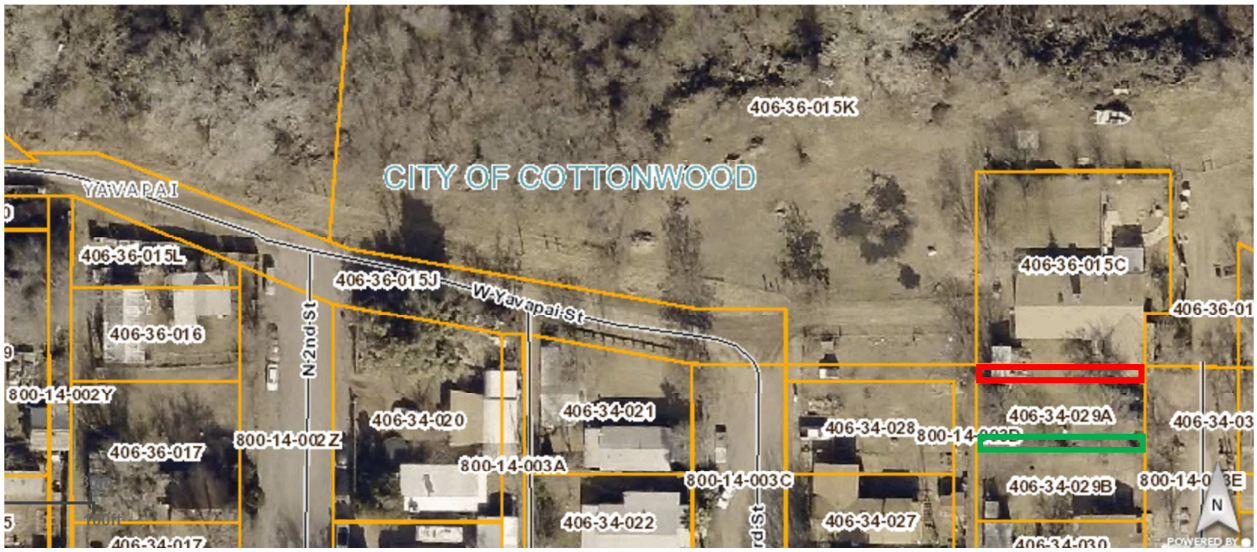

Graphic Depiction of Land and Easements to be traded

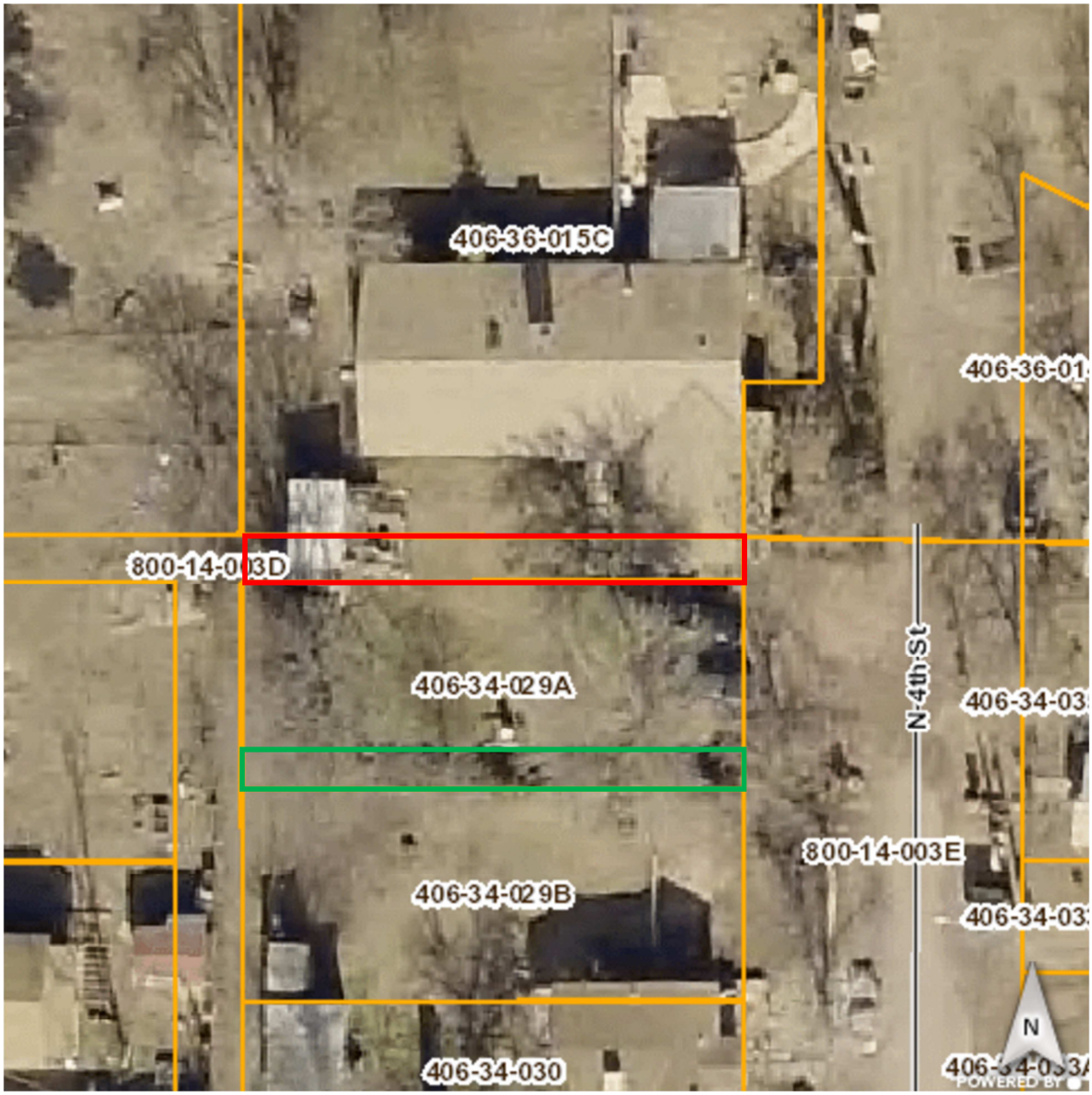

SOUTHWESTERN
ENVIRONMENTAL
CONSULTANTS, INC.

www.sec-landmgt.com
info@sec-landmgt.com

LEGAL DESCRIPTION
800-14-003D

A parcel of land being a part of the Southwest quarter of Section 27, Township 16 North, Range 4 East, of the Gila and Salt River Meridian, Yavapai County, Arizona, being a strip of land 8.96 feet wide and part of a parcel of land as described in Book 4225 of Official Records, Page 64, Yavapai County, Arizona, also shown as the northerly 9 feet of the easterly half of Block 2, lying north of Lot 14 of Block 2 of Stewart and Hood Addition to Cottonwood as recorded in Book 4 of Maps and Plats, Page 41, Yavapai County, Arizona, more particularly described as follows:

Commencing at the southwest corner of a parcel of land as described in Book 4225 of Official Records, Page 64, Yavapai County, Arizona, common with the southwest corner of 406-34-029A as shown on Results of Survey recorded in Instrument 2015-0057124, monumented by a found 5/8 inch rebar and plastic cap stamped "SEC INC LS 40829";

Thence, along the west line of a parcel of land as described in Book 4225 of Official Records, Page 64, Yavapai County, Arizona, North 00°21'19" East a measured distance of 37.01 feet per said Survey, bearing recorded as North per Book 4225 of Official Records, Page 64, Yavapai County, Arizona, to a found 5/8 inch rebar and plastic cap stamped "SEC INC LS 40829", at the **True Point of Beginning**;

Thence, continuing, along the west line of a parcel of land as described in Book 4225 of Official Records, Page 64, Yavapai County, Arizona, North 00°21'19" East a measured distance of 8.96 feet per said Survey, distance recorded as 9 feet per Stewart and Hood Addition to Cottonwood as recorded in Book 4 of Maps and Plats, Page 41, Yavapai County, Arizona, to a found 5/8 inch rebar and plastic cap stamped "SEC INC LS 40829";

REGISTERED LAND SURVEYOR
CERTIFICATE NO.
40829
MARK J.
FARR
Date Signed 6-3-16
ARIZONA U.S.A.

EXPIRES ON
06/30/2019

Thence, South 89°17'24" East a measured distance of 90.00 feet per said Survey, distance recorded as 90 feet per Stewart and Hood Addition to Cottonwood as recorded in Book 4 of Maps and Plats, Page 41, Yavapai County, Arizona, to a found 5/8 inch rebar and plastic cap stamped "SEC INC LS 40829" on the east line of a parcel of land as described in Book 4225 of Official Records, Page 64, Yavapai County, Arizona, also being a point on the west line of Fourth Street;

Thence, along the east line of a parcel of land as described in Book 4225 of Official Records, Page 64, Yavapai County, Arizona, and along the west line of Fourth Street, South 00°21'19" West a measured distance of 8.96 feet per said Survey, distance recorded as 9 feet per Stewart and Hood Addition to Cottonwood as recorded in Book 4 of Maps and Plats, Page 41, Yavapai County to a found 5/8 inch rebar and plastic cap stamped "SEC INC LS 40829";

Thence, North 89°17'24" West a measured distance of 90.00 feet per said Survey, distance recorded as 90 feet per Stewart and Hood Addition to Cottonwood as recorded in Book 4 of Maps and Plats, Page 41, Yavapai County, Arizona, to the **True Point of Beginning** and containing 0.002 acre or 807 square feet more or less and being subject to any easements or encumbrances of record.

REGISTERED LAND SURVEYOR
CERTIFICATE NO.
40829
MARK J.
FARR
Date Signed 6-3-16
ARIZONA U.S.A.

EXPIRES ON
06/30/2019

The description hereon was prepared by SEC Inc. on June 03, 2016, at the request of the Mead / Green Family Trust for the purpose of describing a parcel of land in Yavapai County, Arizona. The authorized user is the Mead / Green Family Trust.

Unauthorized use is strictly prohibited.

SEC Inc. and the registrant cited below will not be responsible for errors committed by others if this description is not reproduced in its entirety exactly as written above including this disclaimer. No liability is accepted for misuse or assumptions made by unauthorized users.

The description above is graphically depicted in Exhibit A attached hereto and made a part hereof without which this document is to be considered incomplete.

The author of this description is Mark J. Farr RLS 40829.

REGISTERED LAND SURVEYOR
CERTIFICATE NO.
40829
MARK J.
FARR
Date Signed 6-3-16
ARIZONA U.S.A.

EXPIRES ON
EXPIRES ON
06/30/2019

EXHIBIT "A"

A PORTION OF THE SOUTHWEST 1/4 OF SECTION 27, T.16N., R.3E., G. & S.R.M., AND A PORTION OF BLOCK 2, STEWARD AND HOOD ADDITION TO COTTONWOOD, RECORDED IN BOOK 4 OF MAPS AND PLATS, PAGE 41, YAVAPAI COUNTY, ARIZONA
A PORTION OF ASSESSOR PARCEL 800-14-003D
CITY OF COTTONWOOD

LEGEND

- INDICATES FOUND CONCRETE NAIL THROUGH PLASTIC CAP STAMPED "LS 19853"
- INDICATES FOUND 1/2" REBAR AND PLASTIC CAP STAMPED "LS 19853"
- INDICATES 1/2" REBAR AND PLASTIC CAP STAMPED "LS 19853", AS SHOWN ON (R4)
- INDICATES FOUND 1/2" REBAR WITH NO CAP OR TAG
- INDICATES FOUND 5/8" REBAR AND CAP STAMPED "SEC INC LS 40829"
- INDICATES CALCULATED LOCATION
- (C) INDICATES CALCULATED DIMENSIONS
- (M) INDICATES MEASURED DIMENSIONS
- (R) INDICATES DIMENSION PER BOOK 4 OF MAPS AND PLATS, PAGE 41 (STEWART AND HOOD ADDITION TO COTTONWOOD)
- (R2) INDICATES DIMENSION PER BOOK 4225 OF OFFICIAL RECORDS, PAGE 64
- (R3) INDICATES DIMENSION PER JOE JONES & ASSOCIATES (NOT RECORDED) RESULTS OF SURVEY OF YAVAPAI STREET, JOB NO. 87-37, SEALED BY SCOTT J. SMITH, RLS 19853, ON 8/4/88
- (R4) INDICATES DIMENSION PER BOOK 191 OF LAND SURVEYS, PAGE 30
- [W] INDICATES WELL

LINE DATA

L1	
S00°21'19"W	37.01'(M)
	37'(R)
L2	
N00°21'19"E	37.01'(M)
	37'(R)
NORTH (R2)	
L3	
N00°21'19"E	9.00'(M)
L4	
S89°17'24"E	37.93'(M)
L5	
N00°42'36"E	1.68'(M)
L6	
S89°17'24"E	2.00'(M)
L7	
N00°42'36"E	1.68'(M)
L8	
S89°17'24"E	50.08'(M)
L9	
S00°21'19"W	9.00'(M)
L10	
N89°17'24"W	90.00'(M)
	90'(R)
WEST 90.00'(R2)	

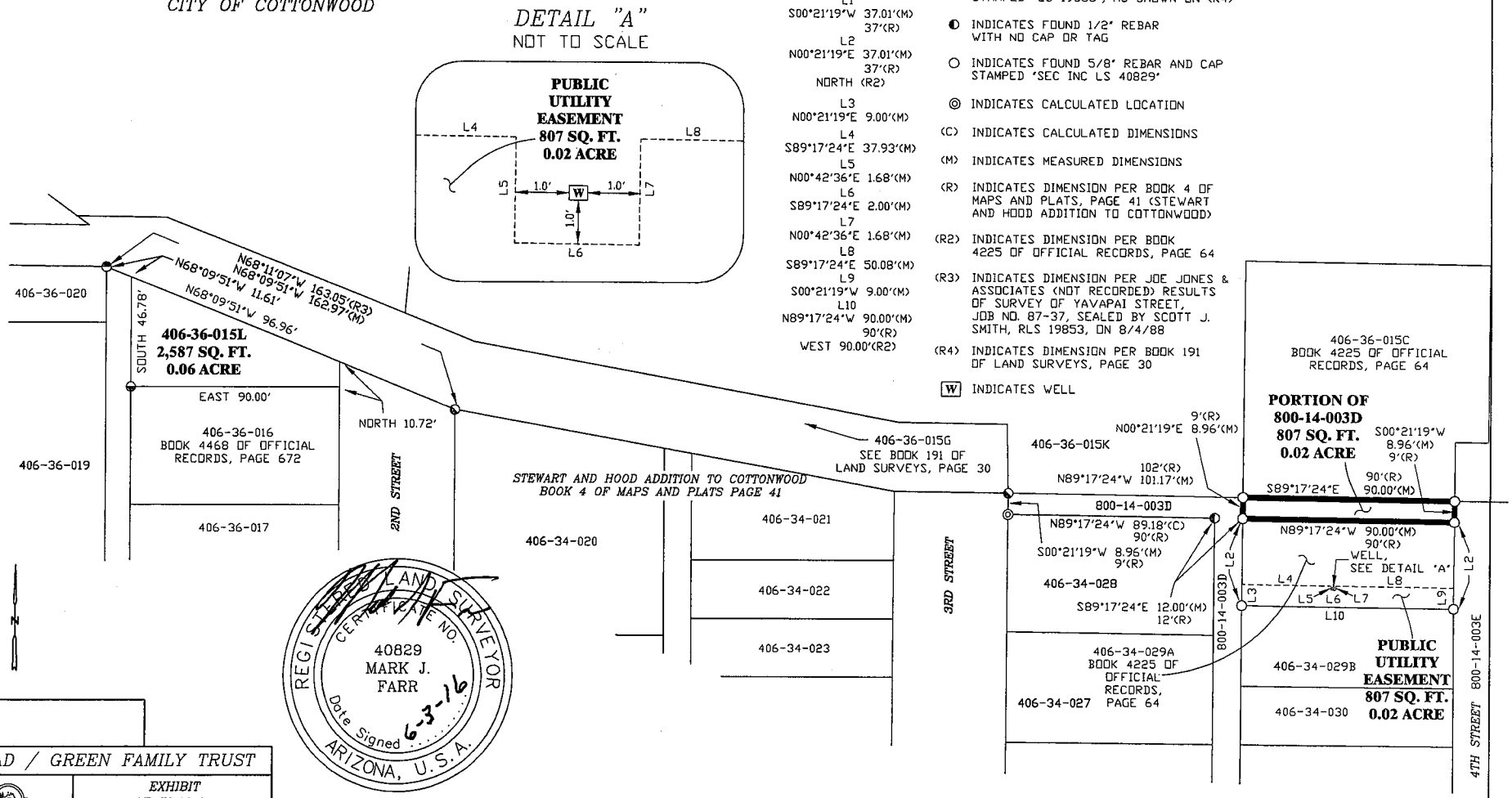

REGISTERED LAND SURVEYOR
CERTIFICATE NO.
40829
MARK J.
FARR
Date Signed 6-3-16
ARIZONA, U.S.A.

06-30-2016
EXPIRES

THIS PLAT DOES NOT SHOW LOCATIONS OF ALL EASEMENTS OR RIGHTS-OF-WAY THAT MAY EXIST ON OR AFFECT THE PROPERTY SHOWN HEREON. A TITLE SEARCH IS RECOMMENDED TO REVEAL THE LOCATIONS AND NATURE OF SAME.

MEAD / GREEN FAMILY TRUST			
SEC Inc. 825 COVE PARKWAY, SUITE A COTTONWOOD, ARIZONA 86326 (928) 634-5889 www.sec-landmgt.com	EXHIBIT SECTION 27 T.16N., R.4E.		
	DATE 06/03/16	DRAWN B.L.S.	PAGE 4 OF 4
	SCALE NONE	CHECKED M.J.F.	15-1003CSXPowellMeadGreen OldTownCochangerain CityCottonwood "Exhibit800-14-0030.dwg"

DISCLAIMER: These plans/documents have been prepared using technical knowledge and skills that would be applied by other qualified registrants who practice the same profession in the same area and at the same time. Efforts have been made to be as accurate as possible. However, plans/documents could contain unintentional technical inaccuracies, typographical errors or omissions. Users of these plans/documents should understand that it is highly probable that errors and omissions will occur in any plan/document preparation process.

© 2016, SEC, INC., All Rights Reserved. This document is protected under the United States Copyright Act. No part may be reproduced in any form or by any means or stored in a database or retrieval system, without the prior written permission of SEC, Inc.

When Recorded Mail To:

City Clerk
City of Cottonwood
824 North Main Street
Cottonwood, Arizona 86326

Exempt under A.R.S. § 11-1134(A)(2)

PUBLIC UTILITY EASEMENT AGREEMENT

GRANTOR: Judy Petty AS TRUSTEE UNDER THE GREEN FAMILY LIVING TRUST DATED _____

GRANTEE: CITY OF COTTONWOOD, an Arizona municipal corporation (the "City")

THIS PUBLIC UTILITY EASEMENT AGREEMENT (this "Agreement") is entered into August 9, 2016, by and between the Grantor and the City for the purposes set forth below.

RECITALS

A. The Grantor is the record owner of certain real property at the location described on Exhibit A, attached hereto and incorporated herein by this reference (the "Easement Area").

B. The Grantor and the City desire to enter into this Agreement for the Grantor to grant to the City a non-exclusive, continuous and perpetual easement (the "Easement") together with the necessary right of access, ingress and egress over the Easement Area, for purposes of installing, operating, inspecting, maintaining, repairing, replacing or removing aboveground and underground public utility facilities (the "Facilities"), as more particularly described herein.

AGREEMENT

NOW, THEREFORE, in consideration of the foregoing introduction and recitals, which are incorporated herein by reference and the mutual covenants set forth below, the Grantor does hereby grant to the City, its successors and assigns, this Easement over the Easement Area on the following terms and conditions:

1. Grant of Easement. The Grantor hereby grants and conveys unto and for the benefit of the City the Easement for the purposes of installing, operating, inspecting, maintaining, repairing, replacing or removing aboveground and underground public utility Facilities including, but not limited to water, sewer, electrical, telecommunications, gas, storm drainage and such other public utility Facilities as may be permitted by law within such Easement.

2. Maintenance of the Easement. The Grantor shall not maintain the Easement Area in a manner that impairs the ability or capacity of the City to fully utilize the Easement. The

Grantor shall not construct, install or place, or permit to be constructed, installed or placed upon the Easement Area any fence, wall, structure or other improvement that shall interfere with or impede the City's access to the Easement or the City's right to maintain the Facilities in the Easement Area. City shall allow reasonable, typical landscaping within the Easement Area including shrubs, groundcover and decomposed granite except in a ten-foot clear zone around any sewer manholes or clean-out locations.

3. Indemnification. To the extent permitted by law, each party shall indemnify and hold the other party harmless from any and all damages, costs, expenses, attorney fees, claims or liabilities arising from or relating to the use of the Easement Area by the party, its successors in interest, assigns, agents, employees.

4. Liens and Encumbrances. The City represents and warrants that it will maintain the Easement Area free and clear from any liens or encumbrances of any nature whatsoever in connection with City's construction of improvements on the Easement Area or the use by City of the Easement Area.

5. Running of Benefits and Burdens. All provisions of this Agreement, including the benefits and burdens, run with the land and are binding upon and inure to the assigns and successors and tenants of the parties hereto.

6. Attorneys' Fees. Either party may enforce this instrument by appropriate legal action and the prevailing party in such litigation may recover as part of its costs in such action reasonable attorneys' fees and court costs.

7. Additional Easements. Nothing contained in this Agreement shall prohibit the Grantor from conveying additional easements for access, utility or other purposes through, over, under, upon, in, across and along the Easement Area to the owners of properties which abut the Easement Area or to government or quasi-governmental agencies; provided however, that no such additional rights or easements shall impair the City's use of the Easement herein granted.

8. Entire Agreement. This instrument contains the entire agreement between the parties relating to City's use of the Easement Area for public utility purposes. Any oral representations or modifications concerning this instrument shall be of no force or effect, excepting a subsequent modification in writing, signed by the parties.

9. Cancellation by City/Grantor. This Agreement may be cancelled by the City or the Grantor pursuant to ARIZ. REV. STAT. § 38-511 at which time, the Easement shall revert back to the owner.

[SIGNATURES ON FOLLOWING PAGE]

IN WITNESS WHEREOF, the parties have executed this Agreement on the date first set forth above.

"Grantor"

Judy Petty,
AS TRUSTEE UNDER THE GREEN FAMILY
LIVING TRUST dated Nov 1990

By Judy Petty, Trustee
Green Family Trust, Trustee

(ACKNOWLEDGMENT)

STATE OF ARIZONA)
) ss.
COUNTY OF YAVAPAI)

On August 9th, 2016, before me personally appeared Judy Petty, as Trustee under the GREEN FAMILY LIVING TRUST, DATED August 9th, 2016, whose identity was proven to me on the basis of satisfactory evidence to be the person who he/she claims to be, and acknowledged that he/she signed the above document, on behalf of the Green Family Living Trust.

JERRIE ANN ELLIOTT
Notary Public, State of Texas
Comm. Expires 09-22-2018
Notary ID 125849251
(Affix notary seal here)

Jerrie Ann Elliott
Notary Public

[SIGNATURES CONTINUE ON FOLLOWING PAGE]

ACCEPTED BY:

"City"

CITY OF COTTONWOOD, an Arizona municipal corporation

_____

Doug Bartosh, City Manager

ATTEST:

_____

Marianne Jimenez, City Clerk

(ACKNOWLEDGMENT)

STATE OF ARIZONA)
) ss.
COUNTY OF YAVAPAI)

On _____, 2016, before me personally appeared Doug Bartosh, the City Manager of the CITY OF COTTONWOOD, an Arizona municipal corporation, whose identity was proven to me on the basis of satisfactory evidence to be the person who he claims to be, and acknowledged that he signed the above document, on behalf of the City of Cottonwood.

_____

Notary Public

(Affix notary seal here)

EXHIBIT A
TO
PUBLIC UTILITY EASEMENT AGREEMENT
BETWEEN
GREEN FAMILY LIVING TRUST
AND
THE CITY OF COTTONWOOD

[Legal Description and Exhibit]

See following pages.

SOUTHWESTERN
ENVIRONMENTAL
CONSULTANTS, INC.

www.sec-landmgt.com
info@sec-landmgt.com

LEGAL DESCRIPTION
Public Utility Easement

A parcel of land being a part of the Southwest quarter of Section 27, Township 16 North, Range 4 East, of the Gila and Salt River Meridian, Yavapai County, Arizona, being the southerly 9 feet, except around an existing well, of a parcel of land as described in Book 4225 of Official Records, Page 64, Yavapai County, Arizona, henceforth referred to as (R2), more particularly described as follows:

Beginning at the southwest corner of said parcel per (R2), common with the southwest corner of 406-34-029A as shown on Results of Survey recorded in Instrument 2015-0057124, monumented by a found 5/8 inch rebar and plastic cap stamped "SEC INC LS 40829";

Thence, along the west line of said parcel per (R2), North 00°21'19" East a distance of 9.00 feet, bearing recorded as North 00°21'19" East per said Results of Survey, to a point;

Thence, South 89°17'24" East a distance of 37.93 feet to a point;

Thence, South 00°42'36" West a distance of 1.68 feet to a point;

Thence, South 89°17'24" East a distance of 2.00 feet to a point;

Thence, North 00°42'36" East a distance of 1.68 feet to a point;

Thence, South 89°17'24" East a distance of 50.08 feet to a point on the east line of said parcel per (R2) and on the west line of present Fourth Street;

Thence, along the east line of said parcel per (R2) and along the west line of Fourth Street, South 00°21'19" West a distance of 9.00 feet, bearing recorded as South 00°21'19" West per said Results of Survey, to the southeast corner of said parcel per (R2), being a found 5/8 inch rebar and plastic cap stamped "SEC INC LS 40829";

REGISTERED LAND SURVEYOR
CERTIFICATE NO.
40829
MARK J.
FARR
Date Signed 6-3-16
ARIZONA U.S.A.

EXPIRES ON
06/30/2019

Thence, along the south line of said parcel per (R2), North 89°17'24" West a measured distance of 90.00 feet, recorded as West a distance of 90.00 feet per (R2), to the **Point of Beginning,** and containing 0.02 acre or 807 square feet more or less and being subject to any easements or encumbrances of record.

The description hereon was prepared by SEC Inc. on June 03, 2016, at the request of the Mead / Green Family Trust for the purpose of describing a Public Utility Easement in Yavapai County, Arizona. The authorized user is the Mead / Green Family Trust.

Unauthorized use is strictly prohibited.

SEC Inc. and the registrant cited below will not be responsible for errors committed by others if this description is not reproduced in its entirety exactly as written above including this disclaimer. No liability is accepted for misuse or assumptions made by unauthorized users.

The description above is graphically depicted in Exhibit A attached hereto and made a part hereof without which this document is to be considered incomplete.

The author of this description is Mark J. Farr RLS 40829.

REGISTERED LAND SURVEYOR
CERTIFICATE NO.
40829
MARK J.
FARR
Date Signed 6-3-16
ARIZONA U.S.A.

EXPIRES ON
06/30/2019

EXHIBIT "A"
PUBLIC UTILITY EASEMENT

A PORTION OF THE SOUTHWEST 1/4 OF SECTION 27, T.16N., R.3E., G. & S.R.M., AND A PORTION OF BOOK 4225 OF OFFICIAL RECORDS, PAGE 64, YAVAPAI COUNTY, ARIZONA
A PORTION OF ASSESSOR PARCEL 406-34-029A
CITY OF COTTONWOOD

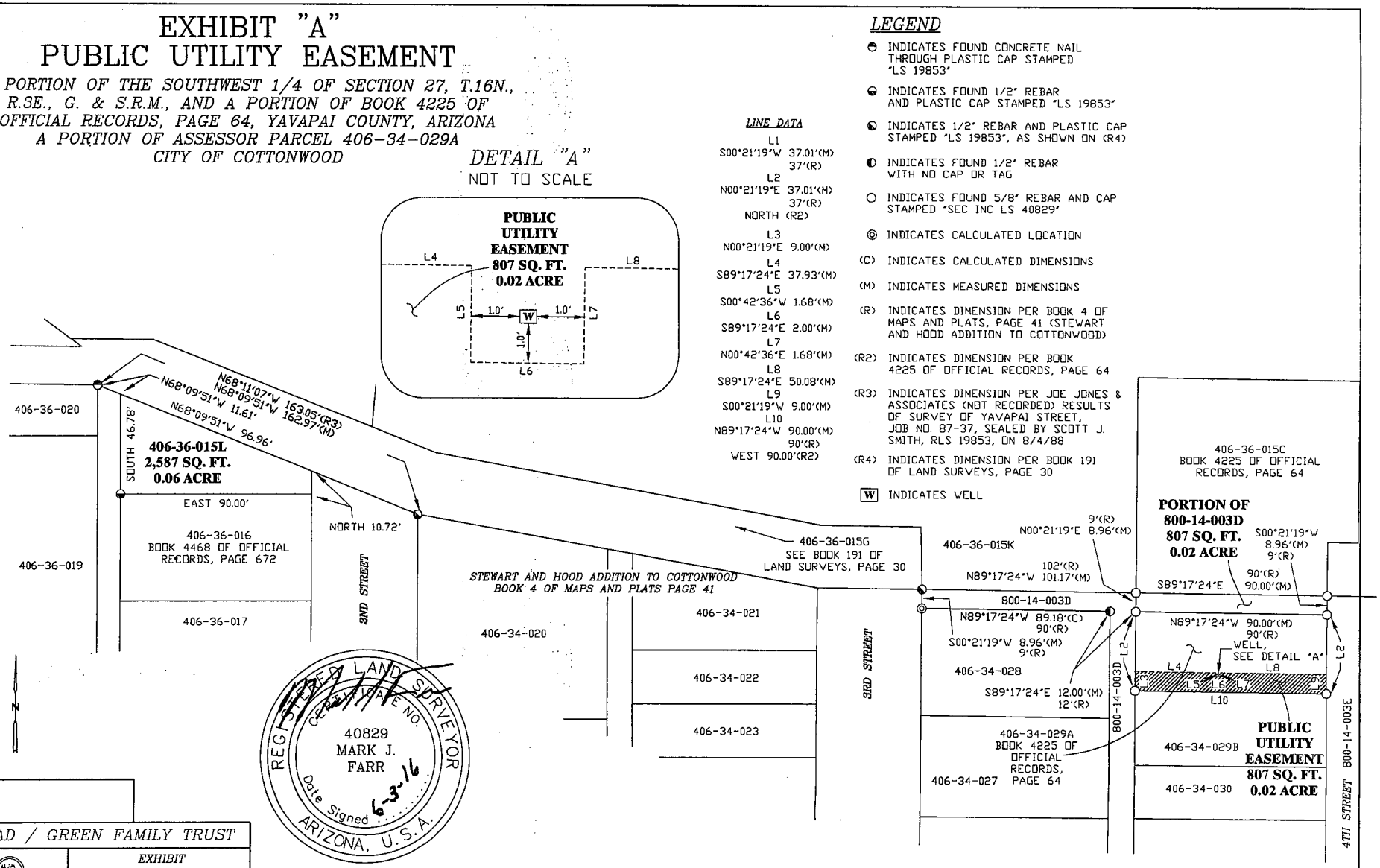

LEGEND

- INDICATES FOUND CONCRETE NAIL THROUGH PLASTIC CAP STAMPED "LS 19853"
- INDICATES FOUND 1/2" REBAR AND PLASTIC CAP STAMPED "LS 19853"
- INDICATES 1/2" REBAR AND PLASTIC CAP STAMPED "LS 19853", AS SHOWN ON (R4)
- INDICATES FOUND 1/2" REBAR WITH NO CAP OR TAG
- INDICATES FOUND 5/8" REBAR AND CAP STAMPED "SEC INC LS 40829"
- INDICATES CALCULATED LOCATION
- (C) INDICATES CALCULATED DIMENSIONS
- (M) INDICATES MEASURED DIMENSIONS
- (R) INDICATES DIMENSION PER BOOK 4 OF MAPS AND PLATS, PAGE 41 (STEWART AND HOOD ADDITION TO COTTONWOOD)
- (R2) INDICATES DIMENSION PER BOOK 4225 OF OFFICIAL RECORDS, PAGE 64
- (R3) INDICATES DIMENSION PER JOE JONES & ASSOCIATES (NOT RECORDED) RESULTS OF SURVEY OF YAVAPAI STREET, JOB NO. 87-37, SEALED BY SCOTT J. SMITH, RLS 19853, ON 8/4/88
- (R4) INDICATES DIMENSION PER BOOK 191 OF LAND SURVEYS, PAGE 30
- W INDICATES WELL

LINE DATA

L1	
S00°21'19"W	37.01'(M)
	37'(R)
L2	
N00°21'19"E	37.01'(M)
	37'(R)
NORTH (R2)	
L3	
N00°21'19"E	9.00'(M)
L4	
S89°17'24"E	37.93'(M)
L5	
S00°42'36"W	1.68'(M)
L6	
S89°17'24"E	2.00'(M)
L7	
N00°42'36"E	1.68'(M)
L8	
S89°17'24"E	50.08'(M)
L9	
S00°21'19"W	9.00'(M)
L10	
N89°17'24"W	90.00'(M)
	90'(R)
WEST 90.00'(R2)	

REGISTERED LAND SURVEYOR
CERTIFICATE NO.
40829
MARK J.
FARR
Date Signed 6-3-16
ARIZONA, U.S.A.

06-30-2016
EXPIRES

MEAD / GREEN FAMILY TRUST			
SEC Inc. 825 COVE PARKWAY, SUITE A COTTONWOOD, ARIZONA 86326 (928) 634-5889 www.sec-landmgt.com	EXHIBIT SECTION 27 T.16N., R.4E.		
	DATE 06/03/16	DRAWN B.L.S.	PAGE 3 OF 3
	SCALE NONE	CHECKED M.J.F.	15-1003CSXPlatedMeadGreen OldTownExchangewith CityCottonwood "Exhibit800-14-0030.dwg"

THIS PLAT DOES NOT SHOW LOCATIONS OF ALL EASEMENTS OR RIGHTS-OF-WAY THAT MAY EXIST ON OR AFFECT THE PROPERTY SHOWN HEREON. A TITLE SEARCH IS RECOMMENDED TO REVEAL THE LOCATIONS AND NATURE OF SAME.

DISCLAIMER: These plans/documents have been prepared using technical knowledge and skills that would be applied by other qualified registrants who practice the same profession in the same area and at the same time. Efforts have been made to be as accurate as possible. However, plans/documents could contain unintentional technical inaccuracies, typographical errors or omissions. Users of these plans/documents should understand that it is highly probable that errors and omissions will occur in any plan/document preparation process.

© 2015, SEC, INC., All Rights Reserved. This document is protected under the United States copyright law. No part may be reproduced in any form or by any means or stored in a database or retrieval system, without the prior written permission of SEC, Inc.

RESOLUTION NUMBER 2853

A RESOLUTION OF THE MAYOR AND COUNCIL OF THE CITY OF COTTONWOOD, ARIZONA, ABANDONING WHATEVER RIGHT, TITLE, OR INTEREST IT HAS IN THE CERTAIN PUBLIC ROADWAY LOCATED WITHIN THE CITY OF COTTONWOOD WHICH HAS BEEN FOUND TO BE NO LONGER NECESSARY FOR PUBLIC USE AND RESERVING A PUBLIC UTILITY EASEMENT AND A DRAINAGE EASEMENT OVER THE SAME.

WHEREAS, the City of Cottonwood, Arizona (the "City") is the owner of certain real property located within the City of Cottonwood, Arizona, as described and depicted on Exhibit A, which is incorporated herein by reference (the "Property"); and

WHEREAS, ARIZ. REV. STAT. § 28-7201 *et seq*. provides that the City may dispose of a public roadway or a portion thereof that is no longer necessary for public use; and

WHEREAS, the Green Family Trust ("Green") desires to acquire title to the Property and has asserted compliance with the requirements of ARIZ. REV. STAT. § 28-7206 *et seq.*; and

WHEREAS, the Mayor and Council of the City of Cottonwood have determined that subject to the requirements, reservations and limitations of this Resolution, the Property has no public use pursuant to ARIZ. REV. STAT. § 28-7215(B); and

WHEREAS, Green agrees to assume the cost of maintaining and the liability for the Property pursuant to ARIZ. REV. STAT. § 28-7215(B).

NOW, THEREFORE, BE IT RESOLVED BY THE MAYOR AND COUNCIL OF THE CITY OF COTTONWOOD, ARIZONA, as follows:

SECTION 1. The recitals above are hereby incorporated as if fully set forth herein.

SECTION 2. Subject to the reservation below, the Property, described and depicted on Exhibit A, is hereby abandoned by the City of Cottonwood.

SECTION 3. The City reserves to itself and excludes from this abandonment such rights and interest, if any, as are required to be reserved by ARIZ. REV. STAT. § 28-7210.

SECTION 4. Upon recordation of this Resolution in the office of the Yavapai County Recorder, title to the Property shall vest in Green, subject to the same

encumbrances, liens, limitations, restrictions and estates as exist on the land to which it accrues and the terms of this Resolution.

SECTION 5. The Mayor, the City Manager, the City Clerk and the City Attorney are hereby authorized and directed to take all steps necessary to carry out the purpose and intent of this Resolution.

PASSED AND ADOPTED by the Mayor and Council of the City of Cottonwood, Arizona, _____, 2016.

FOR THE CITY OF COTTONWOOD:

_____
Diane Joens, Mayor

ATTESTED TO:

_____
Marianne Jimenez, City Clerk

APPROVED AS TO FORM:

_____
Steven B. Horton, City Attorney

EXHIBIT A
TO
RESOLUTION NO. _____

[Legal Descriptions and Maps]

See following pages.

City of Cottonwood, Arizona
City Council Agenda Communication

Print

Meeting Date:	September 6, 2016
Subject:	Joint funding agreement with the U.S. Geological Survey for surface and groundwater monitoring for FFY 2016.
Department:	City Clerk
From:	Tom Whitmer, Water Resources Administrator

REQUESTED ACTION

Approval of joint funding agreement for FFY 2016 with the U.S. Geological Survey for surface and groundwater monitoring.

SUGGESTED MOTION

If the Council desires to approve this item the suggested motion is:

"I move to approve the proposed joint funding agreement for federal fiscal year 2016 with the U.S. Geological Survey for surface and groundwater monitoring in the Middle Verde River Watershed."

BACKGROUND

The County used to serve as the fiscal agent for the Yavapai County Water Advisory Committee (WAC), until the County terminated the WAC. One of the primary roles of the WAC was to contract with the USGS annually for essential groundwater and surface water monitoring in the Verde Valley. With the dissolution of the WAC, the Verde Valley cities and towns continue to meet along with the County to determine how best to continue the USGS monitoring work. All cities and towns along with the County are in agreement that the USGS monitoring work be continued. The USGS has developed a proposed scope of work for FFY16 along with a cost estimate. The cities, towns and county have once again approved the scope of work.

In FFY 2015 the city became the fiscal agent for the work to be completed by the USGS. The USGS has once again drafted a Joint Funding Agreement between the City and the USGS for the proposed scope of work, which is attached.

JUSTIFICATION/BENEFITS/ISSUES

The continuation of the collection of essential ground and surface water data is necessary for advancing the knowledge and understanding of the hydrogeology of the Verde Valley. It also serves to provide continuous monitoring data, which is essential for determining whether positive or negative impacts are occurring to the system.

COST/FUNDING SOURCE

The estimated cost of this effort in the current fiscal year is $65,000.00, with $25,280.00 of that coming from the USGS, $19,860.00 from ADWR, and $19,860.00 being paid for by Cottonwood, which includes the $15,361.00 contributed by the county, other cities and towns and the Yavapai Apache Nation. Cottonwood's portion of the $19,860.00 is $4,499.00. A copy of the table that highlights the cost to each non-federal cost share partner is attached.

Funding for what will hopefully be a continuing program in future years will be subject to further discussion and negotiation between the USGS, ADWR, Cottonwood, Yavapai County, and the other Verde Valley communities.

ATTACHMENTS:		
Name:	Description:	Type:
9-6-16_USGS_Agreement.pdf	USGS Agreement	Cover Memo
9-6-16_USGS_Cost_Distribution.pdf	USGS Cost Distribution	Cover Memo

Form 9-1366
(April 2015)

U.S. DEPARTMENT OF THE INTERIOR
GEOLOGICAL SURVEY

JOINT FUNDING AGREEMENT

Customer #:	6000004581/AZ091
Agreement #:	16CMAZ02600
Project #:	ZF00AD9
TIN #:	86-6007877
Fixed Cost Agreement	YES

FOR

WATER RESOURCES INVESTIGATIONS

THIS AGREEMENT is entered into as of the, 21st day of June, 2016 by the U.S. GEOLOGICAL SURVEY, UNITED STATES DEPARTMENT OF THE INTERIOR, party of the first part, and the CITY OF COTTONWOOD, party of the second part.

1. The parties hereto agree that subject to availability of appropriations and in accordance with their respective authorities there shall be maintained in cooperation a program to for hydrologic data collection in the Middle Verde River Watershed as described in the attached workplan herein called the program. The USGS legal authority is 43 USC 36C; 43 USC 50; and 43 USC 50b.

2. The following amounts shall be contributed to cover all of the cost of the necessary field and analytical work directly related to this program. 2(b) includes In-Kind Services in the amount of $0.00

   (a) by the party of the first part during the period

Amount	Date	to	Date
$12,640.00	October 1, 2015		September 30, 2016

   (b) by the party of the second part during the period

Amount	Date	to	Date
$19,860.00	October 1, 2015		September 30, 2016

   Total = $32,500.00

   (c) Contributions are provided by the party of the first part through other USGS regional or national programs, in the amount of: $0.00

   Description of the USGS regional/national program:
   N/A

   (d) Additional or reduced amounts by each party during the above period or succeeding periods as may be determined by mutual agreement and set forth in an exchange of letters between the parties.

   (e) The performance period may be changed by mutual agreement and set forth in an exchange of letters between the parties.

3. The costs of this program may be paid by either party in conformity with the laws and regulations respectively governing each party.

4. The field and analytical work pertaining to this program shall be under the direction of or subject to periodic review by an authorized representative of the party of the first part.

5. The areas to be included in the program shall be determined by mutual agreement between the parties hereto or their authorized representatives. The methods employed in the field and office shall be those adopted by the party of the first part to insure the required standards of accuracy subject to modification by mutual agreement.

6. During the course of this program, all field and analytical work of either party pertaining to this program shall be open to the inspection of the other party, and if the work is not being carried on in a mutually satisfactory manner, either party may terminate this agreement upon 60 days written notice to the other party.

7. The original records resulting from this program will be deposited in the office of origin of those records. Upon request, copies of the original records will be provided to the office of the other party.

8. The maps, records, or reports resulting from this program shall be made available to the public as promptly as possible. The maps, records, or reports normally will be published by the party of the first part. However, the party of the second part reserves the right to publish the results of this program and, if already published by the party of the first part shall, upon request, be furnished by the party of the first part, at costs, impressions suitable for purposes of reproduction similar to that for which the original copy was prepared. The maps, records, or reports published by either party shall contain a statement of the cooperative relations between the parties.

9. USGS will issue billings utilizing Department of the Interior Bill for Collection (form DI-1040). Billing documents are to be rendered quarterly. Payments of bills are due within 60 days after the billing date. If not paid by the due date, interest will be charged at the current Treasury rate for each 30 day period, or portion thereof, that the payment is delayed beyond the due date. (31 USC 3717; Comptroller General File B-212222, August 23, 1983).

U.S. Geological Survey United States Department of the Interior		City of Cottonwood	
USGS Point of Contact		**Customer Point of Contact**	
Name:	James M. Leenhouts	Name:	Tom Whitmer
Address:	520 N. Park Ave., Suite 221 Tucson, AZ 85719	Address:	816 N. Main Street Cottonwood, AZ 86326
Telephone:	520-670-6671 x278	Telephone:	928-340-2737
Email:	leenhout@usgs.gov	Email:	twhitmer@cottonwoodaz.gov

Signatures and Date

Signature:	James M. Leenhouts 06/23/16	Signature:	
Date:		Date:	
Name:	James M. Leenhouts	Name:	
Title:	Director	Title:	

USGS FY16–18 workplan to continue hydrologic data collection in support of improving the understanding the hydrologic system of the Middle Verde River Watershed (Verde Valley)

Introduction

This workplan proposes to continue hydrologic monitoring that is providing critical data within the Verde Valley for use in future modeling and decision making. This workplan describes the second year of a 4-year monitoring plan and includes funds for 2 monitoring reports. In addition to continuing long-term groundwater and aquifer storage monitoring, the workplan also proposes to continue an investigation of current regional-aquifer contributions (as opposed to bank-storage and shallow-alluvial aquifer contributions) to flow in the Verde River and thus establish a metric from which to evaluate future changes.

Ongoing collection of basic hydrological data continues to improve understanding of the groundwater-flow system and provide valuable information that will assist in evaluation of the accuracy of the previously developed (Pool and others, 2010) or new groundwater-flow models The ongoing data-collection tasks include continued operation of continuous groundwater-level stations, collection of stable isotopes of outflow from the groundwater system; and seasonal monitoring of aquifer-storage change (fig. 1). Long-term monitoring of groundwater levels defines the response of the groundwater system to variations in recharge and groundwater withdrawals. Monitoring of the stable isotopes in discharge waters helps define the distributions of recharge to the groundwater system. Monitoring of aquifer-storage change helps define the local hydrogeology and distributions of aquifer storage-coefficient throughout the major aquifers of Verde Valley.

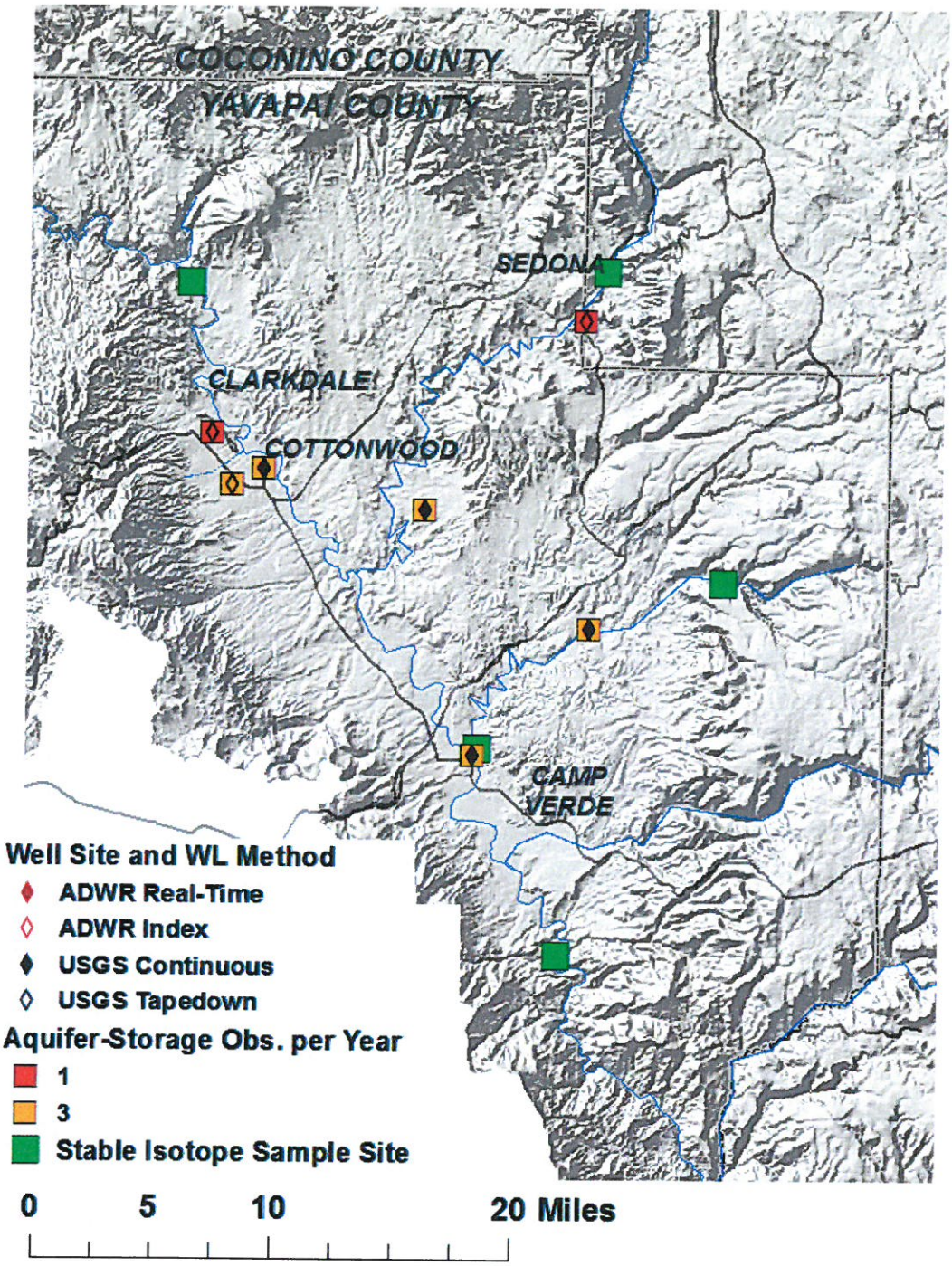

Figure 1. Proposed hydrologic monitoring in the Verde Valley.

Continuous Groundwater-Level Monitoring

USGS water-level monitoring compliments similar information collected by staff of the ADWR Field Services Program and provides a critical record of groundwater conditions that is essential for understanding both climate and human impacts on the groundwater-flow system. The monitored wells, in addition to other well sites that have long-term water-level records, can be used as calibration checks for any groundwater-flow model. Operation and maintenance of the monitoring well stations and periodic calibration of continuous monitoring equipment will be conducted through this task. The integrity of the data will be verified and the data populated into the USGS NWIS database.

USGS AzWSC has been continuously monitoring water levels in 4 or more wells in Verde Valley (Table 1) for several years. The sites are visited periodically (about 3 site visits per year) to service continuous water-level monitoring equipment (transducers and data loggers), download water-level data, and collect a manual depth-to-water observation (tapedown). The data are then uploaded to the web from office computers following each site visit. Currently four sites are instrumented to collect continuous water-level data. Two sites are monitored by seasonal water-level measurements.

Table 1. List of wells proposed for USGS water-level monitoring during FY16. Each continuous record site will be visited and water-level data downloaded approximately 3 times per year.

Site ID	Well Name	Depth to Water Data Frequency	Period of Record	Area
343409111511101	A-14-05 32BBB1	Continuous Hourly	Apr 00-present	Camp Verde
344302111532701	A-15-04 11AAB	Annual	Oct 01-present	Cornville
343850111460701	A-15-05 36DBD	Continuous Hourly	Feb 14-present	Rimrock
344544112025001	A-16-03 20DDC	Annual	Mar 00-present	Clarkdale
344428112004801	A-16-03 34ADC1	Continuous Hourly	Aug 14-present	Cottonwood
344354112014901	A-15-03 04ABA1	Continuous Hourly	New	Cottonwood

Data from the monitored wells can be accessed at:

http://groundwaterwatch.usgs.gov/StateMaps/AZ.html

Aquifer-Storage Monitoring

Aquifer-storage monitoring uses gravity methods to monitor the acceleration of gravity, which varies with the mass of water stored in the subsurface. The method is a direct

measure of subsurface changes in water mass that compliments water-level monitoring at co-located wells. Aquifer-storage change is often inferred from water-level change in a well; however, water-level change is a direct measure of hydraulic-head change, which is only an indirect indicator of storage change. Complimentary monitoring of storage change allows a better understanding of local hydrogeology at each site and often allows an estimate of aquifer storage coefficient, an important aquifer property that influences the response of the aquifer to changes in withdrawals and recharge. Aquifer storage coefficients are poorly defined throughout the aquifer systems in Yavapai County. Aquifer storage is a critical parameter in developing groundwater-flow models that realistically represent the timing of withdrawal and recharge effects on streamflow; accordingly, improved estimates will result in improved groundwater flow models.

The purpose of the aquifer-storage monitoring is to establish records for aquifer-storage change and develop estimates of aquifer storage coefficient at co-located wells where water-levels are also monitored. Initial observations at sites are completed with approximately 3 observations each year, to establish the typical range of variability and any trends that may be occurring at each site. The frequency of observations at each site is modified after trends are established. The frequency may be reduced to annual or less where no change is observed or a consistent multi-year trend is observed. The reduced frequency of observations allows expansion of the network of aquifer-storage monitoring to include more stations across a broader region. Complimentary observations of soil moisture in the upper 2 feet of soil are also made at aquifer-storage sites that have nearby exposed soils for the purpose of evaluating and correcting for the influence of near surface and non-aquifer variations in water storage on the gravity observations.

During 2009, USGS established aquifer-storage monitoring stations at 7 observation wells in Verde Valley and completed the initial observations. Each site was visited 3 times per year for a total of 21 observations annually. One site was discontinued in 2011 because observations indicated no substantial storage change was occurring in an area of confined aquifer and nothing more was expected to be learned from continued monitoring. In addition, observations at 3 sites are now limited to 2 observations per year because no seasonal variation has been observed. Discontinuation of sites and decrease visits at other sites has allowed expansion of the 21 observations per year to include an additional site for

this year. Suggestions for areas of interest and specific sites that might be included in monitoring are welcome. One additional site in Cottonwood was added to the network in 2011. Another site was added in 2014 to monitor a shallow aquifer in Cottonwood (fig. 1, table 2). A total of 8 sites are proposed for aquifer-storage monitoring during FY 2016. Five of the sites will be visited 3 times per year. Three sites will be visited twice per year.

Table 2. List of aquifer-storage monitoring sites proposed for monitoring in the Verde Valley during FY16

Local Well ID	Station Name	Water-Level Monitoring Agency	Obs. per Year	Period of Record	Area
A-15-03 04AAB	Cottonwood American Legion	ADWR Index Well and USGS Continuous	3	Mar 11-present	Cottonwood
A-16-03 34ADC1	Cottonwood Shallow	USGS continuous	3	Aug 14-present	Cottonwood
A-15-05 36DBD1	Weesner#2	USGS continuous	3	Feb 14-present	Rimrock
A-14-05 32BBB1	Camp Verde	USGS continuous	3	Oct 09-present	Camp Verde
A-15-04 11AAB	A-15-04 11AAB	USGS continuous	2	Oct 09-present	Cornville
A-17-06 E30BBB	Dori	ADWR index well	2	Oct 09-present	Sedona
A-16-03 20DDC	A-16-03 20DDC	USGS Tapedown	2	Oct 09-present	Clarkdale
TBD	TBD	TBD	3	New	TBD

Definition of sources of groundwater using geochemical methods

The USGS will continue collecting and processing repeat stable isotope measurements on a quarterly basis from the Verde River main stem and selected tributaries. These isotope measurements will continue a data set that began in 2009 to monitor changes in the sources of water to the river that may result from groundwater withdrawals or changes in recharge rates. Samples will be collected at gaging stations on the Verde River near Clarkdale, Camp Verde, and the head of perennial flow where Beaver Creek joins the Verde River. Samples will also be collected at gaging stations on Oak Creek near Sedona and Wet Beaver Creek near Rimrock. The integrity of the data will be verified and the data populated into the USGS database.

A dissolved gas isotope method of identifying areas of groundwater inflow to the Verde River, and of separating locally- from regionally-derived groundwater, was tested in FY15 and indicated areas of the Verde River within Mormon Pocket that had detectable Radon-222 (^{222}Rn) and high Helium-4 (^{4}He) concentrations which indicate a nearby source of groundwater contribution. This method has significant implications for understanding the watershed's water budget. In FY16, ten samples will be collected from the Verde River between Mormon Pocket and Clarkdale at locations guided by the results from FY15 and analyzed for ^{222}Rn, ^{4}He, other noble gases, water quality parameters and discharge. Two sites sampled in FY15 will be sampled again as part of the FY16 sample collection to understand annual variability in dissolved gas concentrations. Geochemical analysis to understand contribution of groundwater to the Verde River is needed to understand baseline conditions before any future changes to the system. Results from this analysis would be included in the proposed geochemical report in FY17.

Relevance and Benefits

This study addresses the science of groundwater hydrologic properties and water quality within the Verde River, Arizona, specifically related to assessing sources of groundwater. The study contributes to the goals of the USGS strategic science direction "A Water Census of the United States," as identified and described in the Strategic Science Plan of the USGS (U.S. Geological Survey, 2007, Facing tomorrow's challenges—U.S. Geological Survey Science in the Decade 2007-2017: U.S. Geological Survey Circular 1309, 69 p.)

Budget and Deliverable Products

The costs associated with the core project tasks in FY16 are included in table 3. The table also includes projected annual monitoring costs after 2016. The effectiveness of soil-moisture monitoring is being evaluated, which may result in proposed changes to that task including elimination or upgrading.

Personnel needed for the proposed work include two hydrologists, and additional support staff. USGS match funding will be used to support data collection and archiving.

Sufficient data have been collected to date to warrant publications of analyses of the data as well as a summary of what has been learned about the hydrologic system. Two reports are proposed: a water-level and storage report, and a geochemistry report. The costs of the reports are estimated in table 3, and publication dates would be FY17 for the geochemistry report and FY18 for the water-level and storage report.

All discrete groundwater-level measurement data that are collected pursuant to this agreement will be submitted to ADWR using the ADWR Online Water Level Data portal within three months of the end of the water year in which the data were collected. If the data portal is unavailable, the water level data should be submitted directly to the ADWR-Hydrology Division using the same electronic format required by the portal.

Table 3. Project costs and funding for regional groundwater and water quality monitoring in fiscal year 2016, and estimated project costs and funding for fiscal years 2017 and 2018 (Oct. 1, 2015 to Sept. 30, 2018). [the USGS cost share amount will be 39% of the total project cost.]

Item	FY16	FY17	FY18
Water-Level Monitoring	$10,000	$10,000	$10,000
Aquifer-storage monitoring	$20,000	$20,000	$20,000
Soil-moisture monitoring	$1,500	$1,500	$1,500
Stable Isotopes - Verde flow	$8,000	$8,000	$8,000
Groundwater inflow study	$21,500	0	0
Water-Level and storage report	$1,500	$1,500	$24,500
Geochemistry report	$1,500	$23,000	0
Miscellaneous supplies	$1,000	$1,000	$1,000
TOTAL	**$65,000**	**$65,000**	**$65,000**
Local Partners and ADWR	$39,720	$39,720	$39,720
USGS Match	$25,280	$25,280	$25,280

Cost Distribution of Entire USGS Monitoring Plan including Inflow Study			
Member Jurisdiction	**Pop. 2010 Census**	**% factor**	**Total Cost Per non-Federal Cost Share Partner**
Yavapai Apache Nation	467	0.94%	$187
Camp Verde	10,873	21.86%	$4,342
Clarkdale	4,097	8.24%	$1,636
Cottonwood	11,265	22.65%	$4,499
Jerome	444	0.89%	$177
Sedona (YC portion)	6,911	13.90%	$2,760
Yavapai County (Verde Unincorporated = 30,264) - Cornville/Page Springs (3,739) - Lake Montezuma/Rimrock/McGuireville (4,706) - Village of Oak Creek (6,147)	15,672	31.51%	$6,259
TOTAL =	**49,729**	**100%**	**$19,860**
ADWR 50% contribution			**$19,860**
Total Non-Federal Cost Share			**$39,720**

City of Cottonwood, Arizona
City Council Agenda Communication

Print

Meeting Date:	September 6, 2016
Subject:	Application for Extension of Premises Liquor License Permit for The State Bar.
Department:	City Clerk
From:	Marianne Jiménez, City Clerk

REQUESTED ACTION

Council consideration of recommending approval or denial of an application for an Extension of Premises Permit submitted by Brian Webb, licensee for the The State Bar located at 1048 North Main Street.

SUGGESTED MOTION

If the Council desires to approve this item the suggested motion is:

"I move to recommend approval of the application for Extension of Premises Permit submitted by Brian Webb, licensee for The State Bar located at 1048 North Main Street, for the Thunder Valley Rally event scheduled for September 16 & 17, 2016."

BACKGROUND

An application for an Extension of Premises/Patio Permit was received from Brian Webb, licensee for The State Bar located at 1048 North Main Street, to extend the liquor serving area of the building during the Thunder Valley Rally event scheduled for September 16 & 17, 2016.

JUSTIFICATION/BENEFITS/ISSUES

All applications for Extension of Premises Permits that are submitted to the Arizona Department of Liquor Licenses & Control (ADLLC) for establishments located within the City of Cottonwood are presented to the Council for its recommendation of approval or denial of the application. The Council's recommendation is taken into consideration by the ADLLC prior to their final approval of the application.

COST/FUNDING SOURCE

N/A

ATTACHMENTS:

Name:	Description:	Type:
9-6-16_State_Bar_Extension_of_Premises.pdf	The State Bar Extension of Premises/Patio Application	Cover Memo

Arizona Department of Liquor Licenses and Control
800 W Washington 5th Floor
Phoenix, AZ 85007-2934
www.azliquor.gov
(602) 542-5141

DLLC USE ONLY
CSR:
Log #:

APPLICATION FOR EXTENSION OF PREMISES/PATIO PERMIT
OBTAIN APPROVAL FROM LOCAL GOVERNING BOARD BEFORE SUBMITTING TO THE DEPARTMENT OF LIQUOR
****Notice: Allow 30-45 days to process permanent change of premise****

☐ Permanent change of area of service. **A non-refundable $50. Fee will apply.** Specific purpose for change:

☒ Temporary change **(No Fee)** for date(s) of: 09/16/16 through 09/17/16 Specific purpose for change:
Thunder Valley Rally

1. Licensee's Name: Webb (Last) Brian (First) (Middle) License#: 07130024
2. Mailing address: 1048 N Main Street (Street) Cottonwood (City) AZ (State) 86326 (Zip Code)
3. Business Name: The State Bar Cottonwood
4. Business Address: 1048 N Main Street (Street) Cottonwood (City) AZ (State) 86326 (Zip Code)
5. Email Address: brian@thestatebaraz.com
6. Business Phone Number: _____ Contact Phone Number: 928 554 5727
7. Is extension of premises/patio complete?
   ☐ N/A ☒ Yes ☐ No If no, what is your estimated completion date? ___/___/___
8. Do you understand Arizona Liquor Laws and Regulations?
   ☒ Yes ☐ No
9. Does this extension bring your premises within 300 feet of a church or school?
   ☐ Yes ☒ No
10. Have you received approved Liquor Law Training?
    ☒ Yes ☐ No
11. What security precautions will be taken to prevent liquor violation s in the extended area? 4 full time security personal and a perimeter fence to include the new area.
12. ***IMPORTANT:*** Attach the revised floor plan, clearly depicting your licensed premise along with the new extended area outlined in black marker or ink, ***if the extended area is not outlined and marked "extension" we cannot accept the application.***

Individuals requiring ADA accommodations please call (602)542-9027

☐ Barrier Exemption: an exception to the requirement of barriers surrounding a patio/outdoor serving area may be requested. Barrier exemptions are granted based on public safety, pedestrian traffic, and other factors unique to a licensed premise. List specific reasons for exemption:

_____

_____

☐ Approval ☐ Disapproval by **DLLC**: _____ Date: ___/___/___

Notary

I, (Print Full Name) Philip Brown, hereby declare that I am a **CONTROLLING PERSON/ AGENT** filing this notification. I have read this document and the contents and all statements are true, correct and complete.

X (Signature) _____ Controlling Person / Agent

State of AZ County of Yavapai

the foregoing instrument was acknowledged before me this

30th (Day) of August (Month) 2017 (Year)

My commission expires on: Oct. 03, 2017

Nitosha D Richie
Notary Public
Yavapai County, Arizona
My Comm. Expires 10-03-17

Nitosha D Richie
Signature of NOTARY PUBLIC

GOVERNING BOARD

After completion, and **BEFORE submitting to the Department of Liquor**, please take this application to your local Board of Supervisors, City Council or Designate for their recommendation. This recommendation is not binding on the Department of Liquor.

This change in premises is recommended by the local Board of Supervisors, City Council or Designate:

_____

Authorized Signature | Title | Agency | Date

DLLC USE ONLY

Investigation Recommendation: ☐ Approval ☐ Disapproval by: _____ Date: ___/___/___

Director Signature required for Disapprovals: _____ Date: ___/___/___

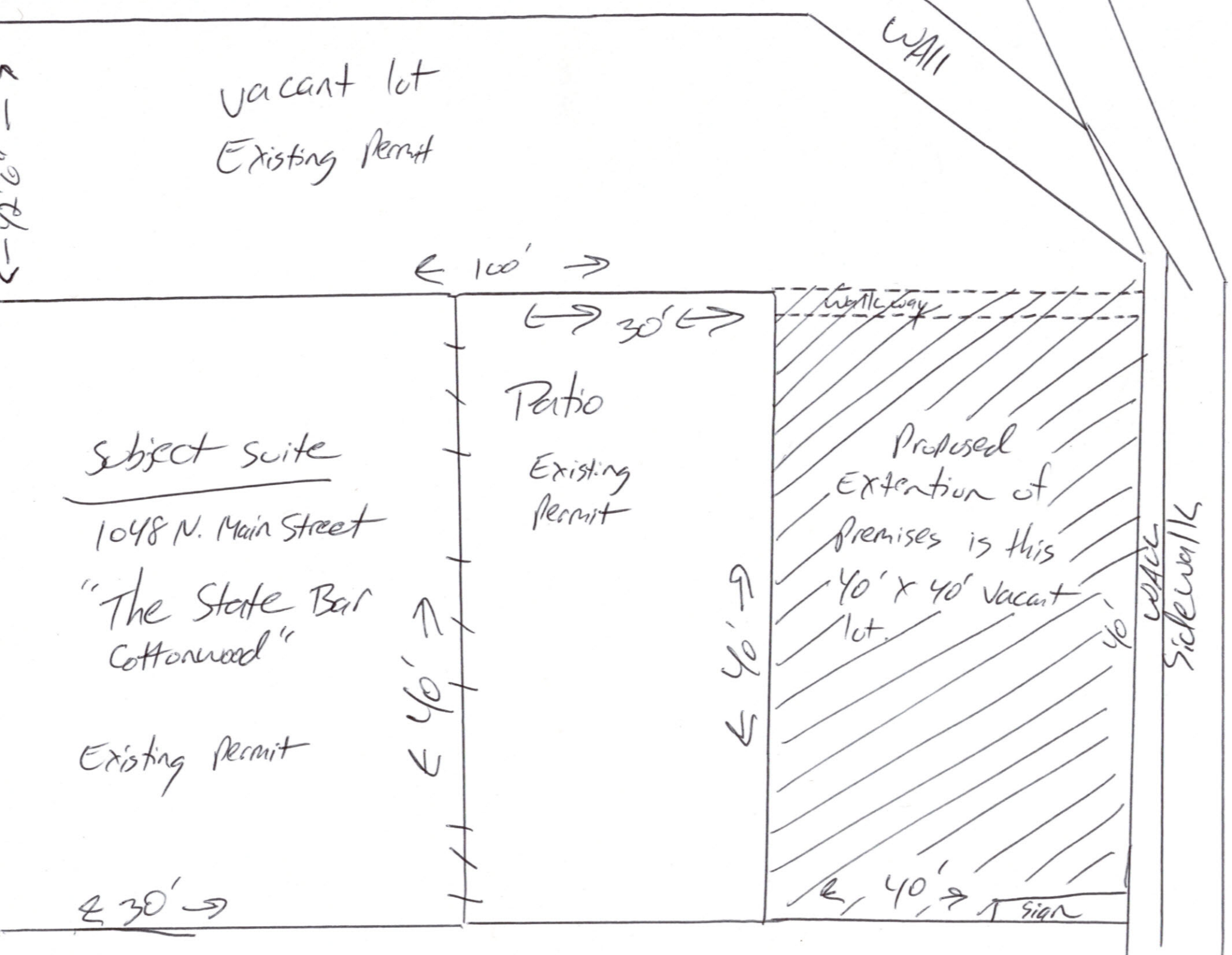

WALL
vacant lot
Existing Permit
100'
30'
Walkway
Patio
Existing Permit
Subject Suite
1048 N. Main Street
"The State Bar Cottonwood"
Existing Permit
40'
40'
Proposed Extention of Premises is this 40' x 40' vacant lot.
40'
WALL
Sidewalk
40'
Sign
30'

City of Cottonwood, Arizona
City Council Agenda Communication

Print

Meeting Date:	September 6, 2016
Subject:	Library Advisory Board Appointments
Department:	Community Services
From:	Vanessa Ward, Library Manager

REQUESTED ACTION

Appointments to fill vacant seat on the Library Advisory Board by resolution

SUGGESTED MOTION

If the Council desires to approve this item the suggested motion is:

"I move to approve Resolution Number 2843 appointing _____ a member of the Library Advisory Board for a three-year term.

I move to approve Resolution Number 2844 appointing _____ a member of the Library Advisory Board for a three-year term.

I move to approve Resolution Number 2845 appointing _____ a member of the Library Advisory Board for a three-year term.

I move to approve Resolution Number 2846 appointing _____ a member of the Library Advisory Board to fill the remainder of a three-year term which expires January 21, 2018.

BACKGROUND

Three (3) Library Advisory terms of office have expired as follows:

Citizen Name **Date of Term Expiration**

- Joseph Stack 7/20/2016
- John O'Neill 7/20/2016
- Judy Paulus 7/20/2016

The Human Resources Manager advertised the above vacancies on the Library Advisory Board in the local newspapers. Joseph Stack, John O'Neill and Judy Paulus have expressed desire to continue serving for another term and have requested Council consideration for reappointment. In addition, the HR Manager received one (1) additional application:

- Nancy Imus

Also, Councilwoman Kyla Allen resigned from the Board following her appointment to serve on the Council, and will not be able to complete her term, which would have expired 1/21/2018.

Two (2) of the current applicants reside within the city limits of Cottonwood and two (2) applicants reside outside the city limits of Cottonwood as per the requirements of the current ordinance.

JUSTIFICATION/BENEFITS/ISSUES

Issue: Fill vacancies on the Library Advisory Board according to requirement by City Council for a seven member board.

COST/FUNDING SOURCE

None.

ATTACHMENTS:

Name:	Description:	Type:
9-6-16_Oneill_Library_Board_Application.pdf	O'Neill Application	Cover Memo
9-6-16_Paulus_Library_Board_Application.pdf	Paulus Application	Cover Memo
9-6-16_Stack_Library_Board_Application.pdf	Stack Application	Cover Memo
9-6-16_Imus_Library_Board_Application.pdf	Imus Application	Cover Memo
res2843.doc	Resolution Number 2843	Cover Memo
res2844.doc	Resolution Number 2844	Cover Memo
RES2845.doc	Resolution Number 2845	Cover Memo
Res2846.doc	Resolution Number 2846	Cover Memo

City of Cottonwood
JUN 10 2016
Received

CITY OF COTTONWOOD
816 NORTH MAIN STREET
COTTONWOOD, AZ 86326
Phone (928) 340-2713
Fax (928) 634-3727
Revised November 25, 2013

APPLICATION FOR COTTONWOOD PUBLIC LIBRARY BOARD
(BOARD/COMMISSION/COMMITTEE)

NAME O'NEILL (Last) JOHN (First) ROBERT (Middle)

MAILING ADDRESS _____ (Route or Box) _____ (City) _____ (State) _____ (Zip)

STREET ADDRESS _____ (Number & Street) _____ (City) _____ (State) _____ (Zip)

HOME PHONE _____ WORK/MESSAGE PHONE _____

EMAIL ADDRESS: ZERO ONEILL.JOHN.R@GMAIL.COM

NOTE: Please check below which items of your personal information we may release to the public, if requested (we recommend at least one):

- ☐ ***Mailing Address*** ☐ ***Street Address***
- ☐ ***Home Phone*** ☐ ***Work/Message Phone*** ☒ ***Email Address***

PLEASE TYPE OR PRINT CLEARLY IN INK ONLY.

Professional Memberships, Registrations, Licenses, Etc. 30 YR MEMBER OF AMERICAN LIBRARY ASSOCIATION

Education BAs-ENGLISH, ENGLISH LITERATURE; MINORS IN HISTORY, PSYCHOLOGY & ENGLISH EDUCATION

Work Experience TEACHING, CONSTRUCTION WORK AND 28 1/2 YEARS AT THE COTTONWOOD PUBLIC LIBRARY

(Please continue on reverse side)

Application for (Board/Commission/Committee)
Page 2

Please describe your qualifications for serving on Board/Commission/Committee: FAMILIAR WITH THE OPERATION OF AN AZ PUBLIC LIBRARY. ALSO CONTINUE TO SERVE ON THE COTTONWOOD BOOKMARKS FRIENDS OF THE LIBRARY BOARD

List any community service organizations or projects you have been involved with (include a brief description of activities):
A MEMBER THROUGHOUT THE DURATION OF THE AZ STATE LIBRARY LONG RANGE PLANNING COMMITTEE THAT COORDINATED THE EFFORTS OF STATE SECONDARY, COLLEGE & PUBLIC LIBRARIES TO SECURE FUNDING, SHARE COLLECTION MATERIAL & DEVELOP EFFECTIVE AND LEGAL OPERATING STANDARDS

Have you ever been convicted of, or pled "no contest" to **any** crime, including any convictions that were later set aside or expunged? [ ] YES [✓] NO

Does the City of Cottonwood employ any relative of yours? [ ] YES [✓] NO

Are you currently a resident of Cottonwood? If so, how long have you been a resident of the City?
No

Signature John R O'Neill Date 6·10·16

NOTE: All applicants are strongly encouraged to attend the Council meeting at which their application will be considered. It is important for Council members to be able to assess applicants' qualifications and backgrounds during the selection process, and be able to ask questions for clarification.

Generally, the Council will conduct a brief interview process during the Council meeting.

Council meetings are held the first and third Tuesday of every month. Council agendas can be found under the City Council tab on the City website: www.cottonwoodaz.gov.

CITY OF COTTONWOOD
816 NORTH MAIN STREET
COTTONWOOD, AZ 86326
Phone (928) 340-2713
Fax (928) 634-3727
Revised November 25, 2013

APPLICATION FOR Library Advisory Board
(BOARD/COMMISSION/COMMITTEE)

NAME Paulus (Last) Judy (First) A. (Middle)

MAILING ADDRESS _____
(Route or Box) (City) (State) (Zip)

STREET ADDRESS SAME
(Number & Street) (City) (State) (Zip)

HOME PHONE 634-1988 ~~WORK/MESSAGE~~ Cell PHONE _____

EMAIL ADDRESS: 1947judyp@gmail.com

NOTE: Please check below which items of your personal information we may release to the public, if requested (we recommend at least one):

- ☐ ***Mailing Address*** ☐ ***Street Address***
- ☑ ***Home Phone*** ☐ ***Work/Message Phone*** ☑ ***Email Address***

PLEASE TYPE OR PRINT CLEARLY IN INK ONLY.

Professional Memberships, Registrations, Licenses, Etc. Retired

Education Graduated High School - Andover, Ohio
2 Associate Degrees - Kent State Univ.

Work Experience 1965-1979 Owner Dairy Queen, 1980-86 Ashtabula Co, OH Juvenile Court clerk, Child Custody Investigator, 1986-87 Maricopa Co Atty's office Child Support Caseworker, 1987-2000 Coldwell Banker Mabery Property Manager, 2000-2007 Owner J Pm Property Mgmt. 2007-Retired

(Please continue on reverse side)

Application for (Board/Commission/Committee)
Page 2

Please describe your qualifications for serving on Board/Commission/Committee: Past President Arizona Chapter of National Association of Residential Property Managers, member of Central AZ Chapter of NARP, Board of Directors for Cottonwood Boys and Girls Club, Presently on Library Advisory Board

List any community service organizations or projects you have been involved with (include a brief description of activities):
Parents Anonymous Counselor
Bowled for Big Brother Big Sister
20+ years Library Volunteer
Inspector for Yavapai Co. Elections - work the polls

Have you ever been convicted of, or pled "no contest" to **any** crime, including any convictions that were later set aside or expunged? [ ] YES [✓] NO

Does the City of Cottonwood employ any relative of yours? [ ] YES [✓] NO

Are you currently a resident of Cottonwood? If so, how long have you been a resident of the City?
No, I reside in Verde Village

Signature Judy Pavlen Date 6-8-16

NOTE: All applicants are strongly encouraged to attend the Council meeting at which their application will be considered. It is important for Council members to be able to assess applicants' qualifications and backgrounds during the selection process, and be able to ask questions for clarification.

Generally, the Council will conduct a brief interview process during the Council meeting.

Council meetings are held the first and third Tuesday of every month. Council agendas can be found under the City Council tab on the City website: www.cottonwoodaz.gov.

CITY OF COTTONWOOD
816 NORTH MAIN STREET
COTTONWOOD, AZ 86326
Phone (928) 340-2713
Fax (928) 634-3727
Revised November 25, 2013

APPLICATION FOR LIBRARY BOARD
(BOARD/COMMISSION/COMMITTEE)

NAME STACK, JOSEPH C.
(Last) (Middle)

MAILING ADDRESS _____
(Route or Box) (City) (State)

STREET ADDRESS _____
(Number & Street) (City) (State) (Zip)

HOME PHONE _____ WORK/MESSAGE PHONE _____

EMAIL ADDRESS: kitnjoe@gmail.com & jstack98188@hotmail.com

NOTE: Please check below which items of your personal information we may release to the public, if requested (we recommend at least one):

- ☐ ***Mailing Address*** ☐ ***Street Address***
- ☐ ***Home Phone*** ☐ ***Work/Message Phone*** ☑ ***Email Address***

PLEASE TYPE OR PRINT CLEARLY IN INK ONLY.

Professional Memberships, Registrations, Licenses, Etc. OLLI (Osher Lifelong Learning Institute) instructor

Education MBA

Work Experience Retired HR Manager

(Please continue on reverse side)

Application for (Board/Commission/Committee)
Page 2

Please describe your qualifications for serving on Board/Commission/Committee: Currently serving on Library Board; enjoy the quality of the Cottonwood Library

List any community service organizations or projects you have been involved with (include a brief description of activities):

OLLI volunteer
Past service as director on Cottonwood Ranch HOA Board
Active chairperson of Cottonwood Ranch landscape committee
Driver for Home Delivery at Meals (SR. Ctr)
Volunteer at Birding Nature Festival; volunteer at Tourist Info office once a month

Have you ever been convicted of, or pled "no contest" to **any** crime, including any convictions that were later set aside or expunged? ☐ YES ☑ NO

Does the City of Cottonwood employ any relative of yours? ☐ YES ☑ NO

Are you currently a resident of Cottonwood? If so, how long have you been a resident of the City?

YES - 10 years

Signature _____ Date 6-17-16

NOTE: All applicants are strongly encouraged to attend the Council meeting at which their application will be considered. It is important for Council members to be able to assess applicants' qualifications and backgrounds during the selection process, and be able to ask questions for clarification.

Generally, the Council will conduct a brief interview process during the Council meeting.

Council meetings are held the first and third Tuesday of every month. Council agendas can be found under the City Council tab on the City website: www.cottonwoodaz.gov.

CITY OF COTTONWOOD
816 NORTH MAIN STREET
COTTONWOOD, AZ 86326
Phone (928) 340-2713
Fax (928) 634-3727
Revised November 25, 2013

APPLICATION FOR Library Board
(BOARD/COMMISSION/COMMITTEE)

NAME Imus (Last) Nancy (First) Wadey (Middle)

MAILING ADDRESS P.O. Box 353 (Route or Box) Cottonwood, (City) Az (State) 86326 (Zip)

STREET ADDRESS _____ (Number & Street) _____ (City) _____ (State) _____ (Zip)

HOME PHONE _____ WORK/MESSAGE PHONE _____

EMAIL ADDRESS: _____

NOTE: Please check below which items of your personal information we may release to the public, if requested (we recommend at least one):

- [x] ***Mailing Address***
- [ ] ***Street Address***
- [ ] ***Home Phone***
- [ ] ***Work/Message Phone***
- [ ] ***Email Address***

PLEASE TYPE OR PRINT CLEARLY IN INK ONLY.

Professional Memberships, Registrations, Licenses, Etc. Cottonwood Chamber of Commerce (member for 17 years + volunteer for 4 months), JEROME ELKS LODGE #1361 (Clarkdale, AZ) officer, Women of the Moose Lodge #1854 (CLARKDALE, AZ)

Education AB ENGLISH - WASHINGTON U. ST. LOUIS, MO.

Work Experience Bookkeeper - Westcott Funeral Home, Cottonwood (17yrs), Verde Valley Fair Association (2yrs), Cottonwood

(Please continue on reverse side)

Application for (Board/Commission/Committee)
Page 2

Please describe your qualifications for serving on Board/Commission/Committee:
Volunteer Cottonwood Library. Patron Cottonwood Library. AB in English literature. Lived in Cottonwood 20 years. Member + volunteer Chamber of Commerce.

List any community service organizations or projects you have been involved with (include a brief description of activities):
Jerome Elks officer. Participated in Flag Day ceremony & Veterans Day. Also participated in clothe a child where we bought clothing for children to go back to school (twice participated). Volunteer for Elks bingo. Collect Money.

Have you ever been convicted of, or pled "no contest" to **any** crime, including any convictions that were later set aside or expunged? [ ] YES [✓] NO

Does the City of Cottonwood employ any relative of yours? [ ] YES [✓] NO

Are you currently a resident of Cottonwood? If so, how long have you been a resident of the City?
YES - 20 years

Signature Nancy Wadey Jones Date JUNE 22, 2016

NOTE: All applicants are strongly encouraged to attend the Council meeting at which their application will be considered. It is important for Council members to be able to assess applicants' qualifications and backgrounds during the selection process, and be able to ask questions for clarification.

Generally, the Council will conduct a brief interview process during the Council meeting.

Council meetings are held the first and third Tuesday of every month. Council agendas can be found under the City Council tab on the City website: www.cottonwoodaz.gov.

RESOLUTION NUMBER 2843

A RESOLUTION OF THE MAYOR AND CITY COUNCIL OF THE CITY OF COTTONWOOD, ARIZONA, APPOINTING _____ A MEMBER OF THE LIBRARY ADVISORY BOARD OF THE CITY OF COTTONWOOD AND ESTABLISHING ___ TERM OF OFFICE.

WHEREAS, the term of Joseph Stack as a member of the Library Advisory Board of the City of Cottonwood expired July 20, 2016; and

WHEREAS, it is necessary to fill this vacancy on the Library Advisory Board in order to maintain the requisite number of members on said board.

NOW, THEREFORE, BE IT RESOLVED BY THE MAYOR AND CITY COUNCIL OF THE CITY OF COTTONWOOD, YAVAPAI COUNTY, ARIZONA:

THAT, in accordance with Section 2.52.020 of the City Code of the City of Cottonwood, _____, is hereby appointed a member of the Library Advisory Board for a three year term expiring July 20, 2019.

PASSED AND ADOPTED BY THE CITY COUNCIL AND APPROVED BY THE MAYOR OF THE CITY OF COTTONWOOD, YAVAPAI COUNTY, ARIZONA, THIS 6TH DAY OF SEPTEMBER 2016.

_____
Diane Joens, Mayor

ATTEST:

_____
Marianne Jiménez, City Clerk

APPROVED AS TO FORM:

_____
Steven B. Horton, Esq.
City Attorney

RESOLUTION NUMBER 2844

A RESOLUTION OF THE MAYOR AND CITY COUNCIL OF THE CITY OF COTTONWOOD, ARIZONA, APPOINTING _____ A MEMBER OF THE LIBRARY ADVISORY BOARD OF THE CITY OF COTTONWOOD AND ESTABLISHING ____ TERM OF OFFICE.

WHEREAS, the term of John O'Neill as a member of the Library Advisory Board of the City of Cottonwood expire July 20, 2016; and

WHEREAS, it is necessary to fill this term on the Library Advisory Board in order to maintain the requisite number of members on said board.

NOW, THEREFORE, BE IT RESOLVED BY THE MAYOR AND CITY COUNCIL OF THE CITY OF COTTONWOOD, YAVAPAI COUNTY, ARIZONA:

THAT, in accordance with Section 2.52.020 of the City Code of the City of Cottonwood, _____, is hereby appointed a member of the Library Advisory Board, to serve a three year term which expires July 20, 2019.

PASSED AND ADOPTED BY THE CITY COUNCIL AND APPROVED BY THE MAYOR OF THE CITY OF COTTONWOOD, YAVAPAI COUNTY, ARIZONA, THIS 6TH DAY OF SEPTEMBER 2016.

_____
Diane Joens, Mayor

ATTEST:

_____
Marianne Jiménez, City Clerk

APPROVED AS TO FORM:

_____
Steven B. Horton, Esq.
City Attorney

RESOLUTION NUMBER 2845

A RESOLUTION OF THE MAYOR AND CITY COUNCIL OF THE CITY OF COTTONWOOD, ARIZONA, APPOINTING _____ A MEMBER OF THE LIBRARY ADVISORY BOARD OF THE CITY OF COTTONWOOD AND ESTABLISHING ____ TERM OF OFFICE.

WHEREAS, the term of Judy Paulus as a member of the Library Advisory Board of the City of Cottonwood expired July 20, 2016; and

WHEREAS, it is necessary to fill this term on the Library Advisory Board in order to maintain the requisite number of members on said board.

NOW, THEREFORE, BE IT RESOLVED BY THE MAYOR AND CITY COUNCIL OF THE CITY OF COTTONWOOD, YAVAPAI COUNTY, ARIZONA:

THAT, in accordance with Section 2.52.020 of the City Code of the City of Cottonwood, _____, is hereby appointed a member of the Library Advisory Board, for a three year term which expires July 20, 2019.

PASSED AND ADOPTED BY THE CITY COUNCIL AND APPROVED BY THE MAYOR OF THE CITY OF COTTONWOOD, YAVAPAI COUNTY, ARIZONA, THIS 6TH DAY OF SEPTEMBER 2016.

_____
Diane Joens, Mayor

ATTEST:

_____
Marianne Jiménez, City Clerk

APPROVED AS TO FORM:

_____
Steven B. Horton, Esq.
City Attorney

RESOLUTION NUMBER 2846

A RESOLUTION OF THE MAYOR AND CITY COUNCIL OF THE CITY OF COTTONWOOD, ARIZONA, APPOINTING _____ A MEMBER OF THE LIBRARY ADVISORY BOARD OF THE CITY OF COTTONWOOD AND ESTABLISHING ____ TERM OF OFFICE.

WHEREAS, Kyla Allen has resigned as a member of the Library Advisory Board of the City of Cottonwood; and

WHEREAS, it therefore is necessary to appoint a new member to said Board in order to maintain the requisite number of members.

NOW, THEREFORE, BE IT RESOLVED BY THE MAYOR AND CITY COUNCIL OF THE CITY OF COTTONWOOD, YAVAPAI COUNTY, ARIZONA:

THAT, in accordance with Section 2.52.020 of the Municipal Code of the City of Cottonwood, _____, is hereby appointed a member of the Library Advisory Board, to fill the remainder of a three-year term which expires January 21, 2018.

PASSED AND ADOPTED BY THE CITY COUNCIL AND APPROVED BY THE MAYOR OF THE CITY OF COTTONWOOD, YAVAPAI COUNTY, ARIZONA, THIS 19TH DAY OF JANUARY 2016.

_____
Diane Joens, Mayor

APPROVED AS TO FORM:

_____
Steven B. Horton, Esq.
City Attorney

ATTEST:

_____
Marianne Jiménez, City Clerk

City of Cottonwood, Arizona
City Council Agenda Communication

Print

Meeting Date:	September 6, 2016
Subject:	Mingus WWTP Ultraviolet Disinfection System Installation
Department:	City Clerk
From:	Utilities Roger Biggs

REQUESTED ACTION

Approval of proposed design/build contract with Schofield Civil Construction for installation of the ultraviolet wastewater disinfection system at the Mingus Avenue wastewater treatment plant.

SUGGESTED MOTION

If the Council desires to approve this item the suggested motion is:

"I move to approve the proposed design/build contract with Schofield Civil Construction for installation of the ultraviolet wastewater disinfection system at the Mingus Avenue wastewater treatment plant, subject to approval of the final form of agreement by the City Attorney."

BACKGROUND

On May 17th, 2016 staff issued a Request for Statements of Qualifications for services to provide the City with Design/Build services to install an Ultraviolet Wastewater Disinfection System at the Mingus Avenue wastewater plant. The intent of this solicitation was to enter into an agreement for a contractor to install the Wedeco Duron Ultraviolet System that the City had previously purchased from Xylem.

The solicitation was published in the newspaper in consecutive weeks and was posted on Public Purchase as well as the City website. Two (2) completed responses were received by the deadline. The review committee conducted interviews with each of the two firms and Schofield Civil Construction was determined as the top-ranked proposer.

City staff was able to negotiate a Guaranteed Maximum Price of $298,946.00 for the work. Staff is also proposing to add a $15,000.00 allowance to the contract to be used as a contingency fund in the event that unforeseen site conditions arise which may affect the final cost of the work performed.

JUSTIFICATION/BENEFITS/ISSUES

The existing UV disinfection system has been in operation continuously since 1999, and is failing. The requested Design Build contract will complete installation of the new UV system that has already been purchased, allowing the City to maintain compliance with strict ADEQ effluent disinfection regulations.

COST/FUNDING SOURCE

Wastewater capital funds

ATTACHMENTS:		
Name:	Description:	Type:
DB_Agreement_-_UV_DisinfectionDraft_8_22_16.doc	DB agreement	Backup Material
_Cottonwood_UV_Wastewater_Disinfection_System_Install_Project_Rev_2.pdf	Cottonwood UV system install	Backup Material

DESIGN/BUILD AGREEMENT AND GENERAL CONDITIONS BETWEEN CITY AND CONTRACTOR

(Where the Basis of Payment is the Cost of the Work plus a Fee, with a Guaranteed Maximum Price Option)

TABLE OF ARTICLES

1. AGREEMENT
2. GENERAL PROVISIONS
3. CONTRACTOR'S RESPONSIBILITIES
4. CITY & PROJECT MANAGER'S RESPONSIBILITIES
5. SUBCONTRACTS
6. CONTRACT TIME
7. COMPENSATION
8. COST OF THE WORK
9. CHANGES IN THE WORK
10. PAYMENT FOR CONSTRUCTION PHASE SERVICES
11. INSURANCE AND BONDS
12. TERMINATION OF THE AGREEMENT AND CITY'S RIGHT TO PERFORM CONTRACTOR'S RESPONSIBILITIES
13. DISPUTE RESOLUTION
14. MISCELLANEOUS PROVISIONS
15. EXISTING CONTRACT DOCUMENTS

AMENDMENT NO. 1 (Attached)

AMENDMENT NO. 2 (Will be included in next phase of Contract)

ARTICLE 1

AGREEMENT

This Agreement is made this 6th day of September in the year 2016 by and between the

CITY:

City of Cottonwood
Cottonwood City Hall
827 North Main Street
Cottonwood, AZ 86326

Organized and operating in Yavapai County, Arizona;

and the **CONTRACTOR:**

Schofield Civil Construction

for Design/Build services in connection with the following **PROJECT:**

The Cottonwood UV Disinfection System Installation project includes Design/Build services for the project components listed below:

- The design services, construction services, and construction as identified in the RFQ for the Cottonwood UV Disinfection System Installation project, to include but not be limited to the following:
- Obtaining all required permits; designing; providing all material, equipment and labor necessary to install new UV Disinfection System at the City Wastewater Treatment Facility located at 1480 W. Mingus Avenue.
- All related site work and utility work associated with the above.

ARTICLE 2

GENERAL PROVISIONS

2.1 TEAM RELATIONSHIP

The City and the Contractor agree to proceed with the Project on the basis of trust, good faith and fair dealing, and will take all actions reasonably necessary to perform this Agreement in an economical and timely manner, including consideration of design modifications and alternative materials or equipment that will permit the Work to be constructed within the Guaranteed Maximum Price (GMP) and by the date of Substantial Completion, as and if they are established by Amendment. The Contractor agrees to procure the architectural and engineering services set forth below, and to furnish construction and administration of the construction of the Work.

2.2 RELATIONSHIP OF THE PARTIES

2.2.1 CONTRACTOR SERVICES

The Contractor shall provide professional engineering services for the Project in accordance with the terms and conditions of this Agreement. The Contractor's performance of services to the City shall be to carry out the activities of Project design, furnish construction and administration of the construction for the work, and to provide the technical documents and supervision of the design team as necessary to achieve the City's Project objectives.

2.2.2 CITY REPRESENTATIONS

2.2.2.1 The Project Manager for the City of Cottonwood is Mike Traynor. None of the activities of the Project Manager supplant or conflict with the designing, budgeting, or any other services and responsibilities customarily furnished by the Contractor or subconsultants in accordance with generally accepted Design/Build engineering or construction practices except as otherwise modified by this Agreement. The Contractor understands and agrees that the Project Manager is a City empolyee and is the City's representative to the Contractor and his consultants and subcontractors insofar as this Agreement is concerned. All instructions by the City to the Contractor relating to services performed by the Contractor will be issued or made through the Project Manager. All communications and submittals of the Contractor to the City shall be issued or made through the Project Manager unless the City otherwise directs in writing. The Project Manager will have the authority to establish procedures, consistent with this Agreement, to be followed by the Contractor and to call periodic conferences to be attended by the Contractor, and the Contractor's consultants and subcontractors, throughout the term of this Agreement.

2.2.2.2 The Contractor understands and agrees that it is not a third-party beneficiary of any contract between the City and the Project Manager, and the Contractor waives any rights, claims, or causes of action it may have as an alleged third-party beneficiary of any such contract.

2.2.2.3 Nothing contained in this agreement shall create a contractual relationship with or a cause of action in favor of a third party against the City, the Project Manager, or the Contractor.

2.2.3 CONTRACTOR REPRESENTATION

2.2.3.1 The Contractor shall provide a list of all consultants that the Contractor intends to use relating to the Project. The list shall include such information on the qualifications of the consultants as may be requested by the City. The City reserves the right to review the consultants proposed, and the Contractor shall not retain a consultant to which the City expresses a reasonable objection. The City will pay the Contractor any increased costs of obtaining the services of consultants to replace those rejected by the City unless the rejected consultants lacked the qualifications and/or certifications to provide the services or unless the City can demonstrate a good cause basis for its rejection.

2.2.3.2 The Contractor shall provide to the City a list of the proposed key project personnel of the Contractor and its consultants to be assigned to the Project. This list shall include such information on the professional background of each of the assigned individuals as may be requested by the City. Such key personnel and consultants shall be satisfactory to the City and shall not be changed except with the consent of the City. The City's approval of substituted personnel will not be unreasonably withheld.

2.2.4 ENGINEER

Engineering services shall be provided by Arizona licensed, independent design professionals retained by the Contractor or furnished by licensed employees of the Contractor and as required or as permitted by the laws of the state of Arizona. The person or entity providing engineering services shall be referred to as the Engineer. If the Engineer is an independent design professional, the architectural and engineering services shall be procured pursuant to a separate agreement between the Contractor and the Engineer.

2.2.5 EXTENT OF AGREEMENT

This Agreement is solely for the benefit of the parties, represents the entire and integrated agreement between the parties, and supersedes all prior negotiations, representations or agreements, either written or oral. In the event language in this document contradicts or is in conflict with any other agreement, written or oral, this agreement language takes precedence.

2.3 DEFINITIONS

2.3.1 The **Contract Documents** consist of:

a) Change Orders and written amendments to this Agreement signed by both the City and Contractor, including a GMP Amendment if executed;

b) Amendments;

c) This Agreement;

d) Documents approved by the City pursuant to Subparagraphs 3.1.4, 3.1.5 or 3.1.6;

e) The information provided by the City pursuant to Clause 4.1.2.a;

f) The Contract Documents in existence at the time of execution of this Agreement which are set forth in Article 15;

g) The City's Program provided pursuant to Subparagraph 4.1.1.

h) The City's RFQ for this project;

i) The Contractor's responses to the City's RFQ to the extent they do not conflict with the above;

j) The Contractor's Guaranteed Maximum Price Proposal, if any.

In case of any inconsistency, conflict or ambiguity among the Contract Documents, the Documents shall govern in the order in which they are listed above.

2.3.2 The **Work** is the Design Phase Services procured in accordance with Paragraph 3.1, the GMP Proposal provided in accordance with Paragraph 3.2, the Construction Phase Services provided in accordance with Paragraph 3.3, Additional Services that may be provided in accordance with Paragraph 3.7, and other services which are necessary to complete the Project that are in accordance with and are reasonably inferable from the Contract Documents.

2.3.3 The term **Day** shall mean calendar day.

2.3.4 A **Subcontractor** is a person or entity who has an agreement with the Contractor to perform any portion of the Work. The term Subcontractor does not include the Engineer or any separate contractor employed by the City or Project Manager or any separate contractor's subcontractors.

2.3.5 A **Sub-subcontractor** is a person or entity who has an agreement with a Subcontractor to perform any portion of the Subcontractor's work.

2.3.6 **Substantial completion** of the Work, or of a designated portion, occurs on the date when construction is sufficiently complete and in accordance with the Contract Documents so that the City can safely fully utilize the Project, or a designated portion, for the use for which it is intended. This date shall be confirmed by a certificate of Substantial Completion signed by the City and Contractor. The certificate shall state the respective responsibilities of the City and Contractor for security, maintenance, utilities, damage to the Work, and insurance. The certificate shall also list the items to be completed or corrected, and establish the time for their completion and correction.

2.3.7 **Final acceptance/completion** of the Work means 100% completion of all construction Work noted in or reasonably inferred from the Contract Documents, including but not limited to all Punch Lists work, all record and close-out documents specified in Owner's Project specifications and Owner training/start up activities.

2.3.8 The City's **Program** is an initial description of the City's objectives, including budgetary and time criteria, space requirements and relationships, flexibility and expandability requirements, special equipment and systems, and site requirements.

ARTICLE 3

CONTRACTOR'S RESPONSIBILITES

The Contractor shall be responsible for the procurement of the design and the construction of the Work consistent with the City's Program; as such Program may be modified by the City during the course of the Work. The Contractor shall exercise reasonable skill and judgment in the performance of its services to accomplish the goals of the City's program.

3.1 DESIGN PHASE SERVICES

3.1.1 PRELIMINARY EVALUATION

The Contractor shall provide a preliminary evaluation of the Project's feasibility based on the City's Program and other relevant information.

3.1.2 PRELIMINARY MASTER SCHEDULE

The Contractor shall prepare a preliminary Master Schedule of the Work for the City's written approval. The schedule shall show the activities of the City, Engineer and Contractor necessary to meet the City's completion requirements. The schedule shall be updated periodically according to the City's direction with the level of detail necessary to provide clarification as requested by the City in order to assure compliance with the Master Schedule. If an update indicates that a previously approved schedule will not be met, the Contractor shall recommend corrective action to the City in the form of a detailed, realistic, recovery schedule. The work will be scheduled, planned and reported using the Critical Path Method with Primavera, Sure Trak or other approved software.

3.1.3 PRELIMINARY ESTIMATE

When sufficient Project information has been identified or upon City's reasonable demand, the Contractor shall prepare for the City's written approval a preliminary estimate utilizing area, volume or similar conceptual estimating techniques. The estimate shall be updated periodically with the level of detail for each estimate update reflecting the information then available. If the preliminary estimate or any update exceeds the City's budget, the Contractor shall make written recommendation to the City as to methods for resolving the issue.

3.1.4 SCHEMATIC DESIGN DOCUMENTS

The Contractor shall submit for the City's written approval Schematic Design Documents, based on the City's Program and other relevant information. Schematic Design Documents shall include drawings, outline specifications and other conceptual documents illustrating the Project's basic elements, scale and their relationship to the site and other structures. This submittal shall include an update of the preliminary schedule and a Schematic Design cost estimate. Eight sets of these documents shall be furnished to the City.

3.1.5 DESIGN DEVELOPMENT DOCUMENTS

The Contractor shall submit for the City's written approval Design Development Documents based on the approved Schematic Design Documents. The Design Development Documents shall further define the Project including drawings and outline specifications fixing and describing the Project size and character, and other appropriate elements incorporating the structural, architectural, mechanical and electrical systems. Ten sets of these documents shall be furnished to the City. The Contractor shall update the schedule and estimate based on the Design Development Documents.

3.1.6 CONSTRUCTION DOCUMENTS

The Contractor shall submit for the City's written approval Construction Documents based on the approved Design Development Documents. The Construction Documents shall set forth in detail the requirements for construction of the Work, and shall consist of drawings and specifications, including City supplied general conditions and general requirements, based upon codes, laws or regulations enacted at the time of their preparation. Construction shall be in accordance with these approved Construction Documents. Twelve sets of these documents shall be furnished to the City prior to commencement of construction.

3.1.7 DESIGN PHASE MEETINGS

Throughout the Design Phase, meetings between the City, the Contractor and Engineer shall be conducted at the discretion of the City as required to fully support the project and the City's needs, but no less than monthly to solicit the City's input into the design and to review the progress of the design. The Contractor or Engineer shall record and distribute meeting minutes of design phase meetings, noting all City directives and requests.

3.1.8 OWNERSHIP OF DOCUMENTS

The City acknowledges the Contractor's construction documents as instruments of professional service. Nevertheless, the plans and specifications prepared under this Agreement shall become property of the City upon completion of the construction documents and payment in full of all monies due to the Contractor for the Design Phase Services as identified in this Article, or upon termination of this Agreement at an earlier time and upon City payment of any pro rata amount due Contractor at the time of such termination. The Contractor shall not use the drawings and specifications, therefore, for any purpose not related to the Project without City's consent. The City will not reuse, for matters unrelated to the work and its subsequent usage, or make any modification to the plans and specifications without the prior written authorization of the Contractor. The City agrees to the fullest extent permitted by law, to indemnify and hold the Contractor harmless from any claim, liability or cost (including reasonable attorney's fees and defense cost) arising or allegedly arising out of any unauthorized reuse or modification of the construction documents by the City or any person or entity that acquires or obtains the plans and specifications from or through the City without the written authorization of the Contractor.

3.2 GUARANTEED MAXIMUM PRICE PROPOSAL

3.2.1 At an appropriate stage of design as established by the City, the Contractor shall, if requested by the City, and at the sole discretion of the City, propose a GMP, which shall be the sum of the estimated Cost of the Work as defined in Article 8 and the contractor's Fee as defined in Article 7. At the City's sole discretion, the City may require multiple GMPs for specific elements of the Project to expedite and/or phase the Work or for such other purpose that may be in the City's best interest. If multiple or phased GMPs are utilized, they shall comply with all requirements set forth in this section 3.2 and all other sections of this Agreement. Acceptance of one GMP does not obligate the City to accept subsequent or any other GMPs, nor does it obligate the City in any manner beyond the GMP actually accepted. The Contractor shall provide the GMP document and a detailed schedule of values in a format that will be provided by the City. The GMP is subject to modification as provided in Article 9.

3.2.2 If a GMP, or any one of multiple of phased GMPs, is not established or agreed to by the City, all references in this Agreement to the GMP shall not be applicable, and the parties shall proceed on the basis of reimbursement of design phase services as set forth in Article 7. No amount shall be paid for construction or construction services not established or agreed to by the City absent a written agreement between the parties to the contrary.

3.2.3 The estimated Cost of the Work may include a contingency, a sum established by the Contractor and approved by the City, for use upon approval by the City to cover costs that are properly reimbursable as a Cost of the Work but are not the basis for a Change Order.

3.2.4 BASIS OF GUARANTEED MAXIMUM PRICE
The Contractor shall include with the GMP proposal a written statement of its basis, which shall include:

a. a list of the drawings and specifications, including all addenda, which were used in preparation of the GMP proposal;

b. a list of allowances and a statement of their basis;

c. a list of the assumptions and clarifications made by the Contractor in the preparation of the GMP proposal to supplement the information contained in the drawings and specifications;

d. the date of Substantial Completion upon which the proposed GMP is based, and the Schedule of Work upon which the date of Substantial Completion is based;

e. a schedule of applicable alternate prices;

f. a schedule of applicable unit prices;

g. a statement of Additional Services included, if any; and

h. the time limit for acceptance of the GMP proposal.

3.2.5 The Contractor shall meet with the City and Project Manager to review the GMP proposal. In the event that the City and Project Manager discover any inconsistencies or inaccuracies in the information presented, the City will promptly give written notice to the Contractor, who shall make appropriate adjustments to the GMP, its basis or both.

3.2.6 Unless the City accepts the GMP proposal in writing on or before the date specified in the GMP proposal for such acceptance and so notifies the Contractor, the GMP proposal shall not be effective.

3.2.7 Prior to the City's acceptance of the Contractor's GMP proposal, the Contractor shall not incur any cost to be reimbursed as part of the Cost of the Work, except as provided in this Agreement or as the City may specifically authorize in writing.

3.2.8 Upon acceptance by the City of the GMP proposal, the GMP and its basis shall be set forth in an Amendment. The GMP and the date of Substantial Completion shall be subject to modification by changes in the Work as provided in Articles 6 and 9.

3.2.9 The GMP shall include in the Cost of the Work those taxes which are applicable at the time the GMP is established. If in accordance with the City's express written direction an exemption is claimed for taxes, the City agrees to indemnify, defend and hold the Contractor harmless for any liability, penalty, interest, fine, tax assessment, attorneys fees or other expense or cost incurred by the Contractor as a result of any action taken by the Contractor in accordance with the City's direction relative to the taxes as described in this section only.

3.3 CONSTRUCTION PHASE SERVICES

3.3.1 The Construction Phase will commence upon the issuance by the City of a written notice to proceed with construction. If construction commences prior to execution of a GMP Amendment, the City's written notice to proceed will list the documents that are applicable to the part of the Work which the City has authorized. No Work shall commence until Contractor secures and provides, to the City, proof of all bonds as required by Arizona law to include, but not be limited to, performance and payment bonds.

3.3.2 In order to complete the Work, the Contractor shall provide all necessary construction supervision, inspection, construction equipment, labor, materials, tools, and subcontracted items.

3.3.3 The Contractor shall give all notices, obtain all approvals and comply with all laws and ordinances legally enacted at the date of execution of the Agreement, which govern the proper performance of the Work. The Contractor shall secure and the City will pay all fees for required permits.

3.3.4 The Contractor shall prepare and submit a Preliminary Master Schedule of Work for the City's written approval. This schedule shall indicate the dates for the start and completion of the various stages of the Project including the dates when information and approvals are required from the City. Schedule software shall be Primavera,

SureTrak or other approved software. At the time a GMP proposal is submitted, a bar graph Construction Progress Schedule for each major element of construction shall also be submitted. Schedule software shall be Primavera, SureTrak, or other approved software. The Progress Schedule is subject to review by the City. The Progress Schedule must be directly related to Substantial and Final Completion and shall indicate the dates for the start and completion of the various components and phases of construction and shall be revised as required by the conditions of the Work, upon request of and subject to review by the City. This shall be done no less than monthly. The contractor shall provide an electronic copy of the original schedule and each monthly update to the Project Manager. Contractor agrees to promptly respond to all inquiries by the City concerning any deviation of the progress of construction from the Progress Schedule and to provide a recovery schedule for approval by the City upon request. Progress payments, in whole or in part, may be withheld if Contractor fails to timely respond to such request or if there is a significant delay from the Progress Schedule.

a) The Construction Progress Schedule shall illustrate the planned, logical progression of construction activities and shall include all work to be performed under this contract.

b. The Construction Progress Schedule shall have been derived from a network analysis. The Progress Schedule shall clearly indicate the path of critical activities and shall further indicate activity duration, earliest and latest start and finish dates, and float time for all except critical activities. The Progress Schedule shall also indicate all relationships between activities, shall not contain more than one critical path, and shall be presented in a time scaled graphical format for the project as a whole, with milestone dates shown for various required phases. The schedule will be rejected if the float is not able to be accurately calculated due to faulty activity logic.

c. The Construction Progress Schedule shall include projected dates of submittal of all items of material for which submittals are required and shall include delivery dates of all items of material and equipment that are critical or have a long lead time. Contractor shall submit a monthly report summarizing all deviations from the Progress Schedule that will or may result in delay of the Project. Contractor shall prepare, not less frequently than monthly, a schedule summary report in a form and of sufficient detail and character as approved by City. The report, at a minimum, shall specify whether the Project is on schedule, and, if not, the reasons therefore, and the new schedule.

d. Contractor shall also prepare a report not less than thirty calendar days after the GMP proposal is submitted which shall include a complete list of suppliers, items to be purchased from the suppliers or fabricators, time required for fabrication and the scheduled delivery dates for each item.

e. Contractor shall prepare a monthly updated Construction Progress Schedule. The updated Schedule shall identify the status of all change requests, bulletins, and modifications. Progress Schedule updates shall indicate work completed to date and shall adjust the schedule to reflect

any change in the planned sequence of activities. The Contractor shall at all times manage the Work in substantial conformance with the Progress Schedule. Failure of the Contractor to manage the Work in substantial conformance with the Progress Schedule may be considered as a material default of this Contract. Failure to submit the update when required may delay processing of the Application for payment until acceptable submission is made.

f. In the event of significant delays, lags or changes in the planned sequence of activities as determined by City, Contractor shall provide to City a revised Progress Schedule indicating proposed rescheduling of activities to achieve completion of the Project by the Substantial completion date.

g. Additions to or deletions from the Contract authorized by Change Orders shall be reflected in the Progress Schedule.

h. In conjunction with the Progress Schedule, Contractor shall provide a Procurement Schedule for all major or time critical components to be acquired and incorporated in the Project, which schedule shall be integrated into the Progress Schedule.

i. The City will hold weekly construction progress meetings at the Site, or other location as designated by the City. The Project Manager will record and distribute the official meeting minutes. The Contractor shall report the progress of the Work in detail with reference to construction schedules. Contractor shall ensure that each currently active subcontractor shall have present a competent representative to report the condition of its work and to receive information.

j. The Contractor shall provide to the City an anticipated monthly pay draw schedule based on percentage completed or some other approved method to be determined.

3.3.5 In determining responsibility for permit acquisition, the Contractor shall abide by the Permit responsibilities. The Contractor shall secure and the City will pay all fees for required permits.

3.3.6 The Contractor shall take necessary precautions for the safety of its employees on the Project, and shall comply with all applicable provisions of federal, state, county and municipal safety laws to prevent accidents or injury to persons on, about or adjacent to the Project site. The Contractor, directly, or through its Subcontractors, shall erect and properly maintain at all times, as required by the conditions and progress of the Work, necessary safeguards for the protection of workers and the public. The Contractor, however, shall not be responsible for the elimination or abatement of safety hazards created or otherwise resulting from work at the Project site carried on by the City and Project Manager or their employees, agents, separate contractors or tenants, unless said hazards are identified within the Scope of Work as agreed upon within the GMP. The City agrees to cause their employees, agents separate contractors and tenants to abide by and fully adhere to all applicable provisions

of federal, state and municipal safety laws and regulations. The above provision shall not relieve Subcontractors of their responsibility for the safety of persons or property in the performance of their work, nor for compliance with all applicable provisions of relevant laws.

3.3.7 The Contractor shall keep such full and detailed accounts as may be necessary for proper financial management under this Agreement. The City and the Project Manager will be afforded access to all Contractor records, books, correspondence, instructions, drawings, receipts, vouchers, memoranda and similar data relating to this Agreement. The Contractor shall preserve all such records for a period of five years after the final payment or longer where required by law.

3.3.8 The Contractor shall document, or provide daily written reports to the City on the progress of the Work. Such reports shall include at a minimum: weather conditions, equipment and manpower on site, and a narrative of each element of Work in progress.

3.3.9 The Contractor shall develop a system of cost reporting for the Work, including regular monitoring of actual costs for activities in progress and estimates for uncompleted tasks and proposed changes in the Work. The reports shall be presented to the City at mutually agreeable intervals.

3.3.10 At all times the Contractor shall maintain the site of the Work in a clean and hazard-free state. Debris and waste materials resulting from the Work shall be removed at the end of each work day. At the completion of the Work, the Contractor shall remove from the premises all construction equipment, tools, surplus materials, waste materials and debris including disbursed waste materials.

3.3.11 The City will be conducting operations within the wastewater treatment plant, nearby buildings and outdoor areas. The Contractor will be required to perform work in a manner that will minimize the disruption of activities. Prior to beginning construction operations, the Contractor shall propose and receive City approval of the perimeter of a work area necessary for safe and efficient operations over which the Contractor shall maintain control during the construction period. Contractor shall not unreasonably encumber the site with materials or equipment. Contractor shall perform in a manner that safeguards the health, safety and welfare of visitors, staff and community.

3.3.12 Contractor shall maintain at the Site (or other location approved by City) for City one record copy of the Drawings, Specifications, Addenda, Change Orders and other Modifications, in good order and marked currently to record changes and selections (all changes and selections to be approved by City in advance) made during construction, and in addition approved Shop Drawings, Product Data, Samples and similar required submittals. These shall be available to City and shall be delivered to City upon completion of the Work.

3.3.13 At the date of Substantial Completion and as a condition precedent to final payment, Contractor shall furnish the following documents to City: Record Drawings showing the field changes and selections (all changes and selections to be approved by City in advance) affecting the general construction, mechanical, electrical, plumbing, and all other work, and indicating the Work as actually installed. These shall consist of scaled and accurately drawn markings on a set of reproducible prints of the Drawings

obtained and paid for by Contractor. Contractor shall maintain at the Site one set of Drawings and indicate thereon each field change as it occurs. Within thirty (30) days of Substantial Completion, the Contractor shall furnish a computer disk of the record drawings, drawn in an AutoCAD format approved by the City.

3.3.14 Contractor shall maintain at the Site at all times a daily log ("Daily Log"), which describes daily manpower (by type and trade) working at the Site on the Project, any special or heavy equipment on Site and its use, weather conditions, labor disputes, tests conducted, persons visiting the Site, and any events that might affect the Progress Schedule or the quality of the Work. Contractor shall provide a current copy of the Daily Log to Project Manager at the weekly construction meetings.

3.3.15 Contractor is responsible for completing the Project consistent with City's existing property and other projects. **Contractor accepts full and exclusive responsibility for any damage to any portion of the Project, whether in full or in part, due to cutting, patching, alterations, excavation or other actions which may affect City or the work of other contractors. In the event Contractor feels that an alteration is necessary regarding the above, it is Contractor's affirmative responsibility to request and receive written consent by City for such action.** All parties to this Contract agree that they will perform this provision of this Agreement in good faith and in a commercially reasonable manner.

3.3.16 All areas requiring cutting and patching shall be restored to a completely finished condition, matching adjacent unpatched areas, and acceptable to City.

3.4 HAZARDOUS MATERIAL

3.4.1 A Hazardous Material is any substance or material identified now or in the future as hazardous under any federal, state or local law or regulation, or any other substance or material which may be considered hazardous or otherwise subject to statutory or regulatory requirements governing handling, disposal and /or clean-up. The Contractor shall not be obligated to commence or continue Work until any known or suspected Hazardous Material(s) discovered at the Project site has been removed, or rendered or determined to be harmless by the City as certified by an independent testing laboratory and approved by the appropriate government agency.

3.4.2 If, after the commencement of the Work, a known or reasonably suspected Hazardous Material is discovered at the Project site, the Contractor shall be entitled to immediately stop Work in the affected area. Under such conditions the Contractor shall immediately report the condition to the City and Project Manager and, if required, the government agency with jurisdiction.

3.4.3 The Contractor shall not be required to perform any Work relating to, or in the area of, known or suspected Hazardous Material without written mutual agreement.

3.4.4 The City will be responsible for retaining an independent testing laboratory to determine the nature of the material encountered and whether it is a Hazardous Material requiring corrective measures and/or remedial action. Such measures will be the sole responsibility of the City, and will be performed in a manner minimizing any adverse

effect upon the Work of the Contractor. The Contractor shall resume Work in the area affected by any Hazardous Material only upon written notification by the City that the Hazardous Material has been removed or rendered harmless.

3.4.5 If the Contractor reasonably incurs actual and direct additional costs and/or is actually delayed in achieving substantial and/or final completion due directly to the presence of known or suspected Hazardous Material, which the Contractor did not in whole or part introduce to the site, the Contractor shall be entitled to an equitable adjustment in the GMP and/or the date of Substantial Completion.

3.4.6 INDEMNIFICATION

3.4.6.1 To the fullest extent permitted by law, the Consultant shall indemnify and hold harmless the City and each council member, officer, employee or agent thereof (the City and any such person being herein called an "Indemnified Party"), for, from and against any and all losses, claims, damages, liabilities, costs and expenses (including, but not limited to, reasonable attorneys' fees, court costs and the costs of appellate proceedings) to which any such Indemnified Party may become subject, under any theory of liability whatsoever ("Claims") to the extent that such Claims (or actions in respect thereof) are caused by the negligent acts, recklessness or intentional misconduct of the Consultant, its officers, employees, agents, or any tier of subcontractor in connection with Consultant's work or services in the performance of this Agreement. The amount and type of insurance coverage requirements set forth will in no way be construed as limiting the scope of the indemnity in this Section.

3.4.6.2 In claims against any person or entity indemnified under this paragraph by anyone directly or indirectly employed by the Contractor, a Subcontractor, or anyone for whose acts they may be liable, the indemnification obligation under this paragraph shall not be limited by a limitation on amount or type of damages, compensation or benefits payable by or for the Contractor or a Subcontractor under workers' compensation acts, disability benefit acts, employee benefit acts or other insurance.

3.4.7 The terms of this Paragraph 3.4 shall survive the completion of the Work under this Agreement and/or any termination of this Agreement.

3.5 ROYALTIES, PATENTS AND COPYRIGHTS

3.5.1 The Contractor shall pay all royalties and license fees which may be due on the inclusion of any patented or copyrighted materials, methods or systems selected by the Contractor and incorporated in the Work. The Contractor shall defend, indemnify and hold the City and Project Manager harmless from all suits or claims for infringement of any patent rights or copyrights arising out of such selection.

3.6 WARRANTIES AND COMPLETION

3.6.1 The Contractor warrants that all materials and equipment furnished for the Construction of this Project will be new unless otherwise approved by City; of good quality, in conformance with the Contract Documents, and free from defective workmanship, materials and hazardous materials. Warranties shall commence on the date of Substantial Completion of the Work or of a designated portion of the Work if the warranted items are fully installed, operational, and available for use and if not, at such time after the date of Substantial Completion as they are. The Contractor agrees to correct all construction performed under this Agreement which proves to be defective in workmanship and materials within a period of **two years** from the date of Substantial Completion or for such longer periods of time as may be set forth with respect to specific warranties required by the Contract Documents or as may be allowed by law.

3.6.2 The Contractor shall secure required certificates of inspection, testing or approval and deliver them to the City.

3.6.3 The Contractor shall collect all written warranties and equipment manuals and deliver them to the City.

3.6.4 The Contractor shall perform the checkout of utilities and operations of systems and equipment for readiness, perform their initial start-up and testing, and conduct a training program for City personnel in their operation.

3.7 ADDITIONAL SERVICES

3.7.1 Any Additional Services must be authorized in advance by the City in writing; the Contractor shall furnish or obtain from others the authorized services. The Contractor shall be paid for these additional services by the City as herein provided to the extent they exceed the obligation or reasonably inferable obligation of the Contractor under this Agreement. Examples of potential additional services are as follows:

a. Providing additional financial feasibility or other special studies other than as required by or reasonably inferable from this Agreement.

b. Providing additional planning surveys or alternative site evaluations other than as required by or reasonably inferable from this Agreement.

c. Providing design services relative to future facilities, systems and equipment that are not intended to be constructed as part of the Project, other than general planning and Master Planning for future work as may be indicated by the Program of Requirements.

d. Making major revisions in Drawing, Specifications, or other documents when such revisions are inconsistent with written approvals or instructions previously given by the City or are due to causes beyond the control and without the fault or negligence or partial fault or negligence of the Contractor or its consultants or agents.

e. Providing additional soils sampling, classification, and analysis other than as required by or reasonably inferable from this Article. However,

analysis of existing soils information and soils analysis during the Design Phase and recommendations needed during the Construction Phase of the Project are not considered to be additional services under any event.

f. Preparing to serve or serving as an expert witness for the City in connection with any public hearing (with the exception of those outlined in scope), arbitration proceeding, or legal proceeding wherein the Contractor or Subcontractor of the Contractor is not a party or allegedly at fault; however, preparing to serve or serving as a fact witness for the City or rendering testimony necessary to secure governmental approval of zoning or land-use clearances for the Project shall not constitute an additional service.

g. Providing surveying services such as platting, mapping, subdivision agreements, or recording subdivision plats other than as required by or reasonably inferable from this Agreement.

h. Providing additional services and costs necessitated by out-of-town travel required of and approved in writing by the City other than visits to the Project and other than for travel required to accomplish the Work and/or as expressly required by the Contract Documents.

i. Providing any other services not otherwise included in this Agreement, reasonably inferable from this Agreement, or not customarily furnished in accordance with generally accepted Contractual practices consistent with the term of this Agreement.

j. Providing design and engineering of any work outside the property line if said work is not expressly identified and included in the scope of Work subject to this Agreement.

k. Providing consultation concerning replacement of Work damaged by fire or other causes and not due in whole or in part to Contractor's action or inaction during construction or furnishing services required in connection with the replacement of such work.

l. Preparing additional documents for alternate, separate, or sequential bids or providing services in connection with bidding, negotiation, or construction prior to the completion of the Construction Documents Phase, other than as required by or reasonably inferable from this Agreement.

m. Providing additional special surveys, environmental studies, and submissions required for approvals of governmental authorities or others having jurisdiction over the project, other than as required by or reasonably inferable from this Agreement.

n. Providing extensive analyses of owning and operating costs.

o. Providing interior design and other similar services required for or in connection with the selection, procurement, or installation of furniture,

furnishings, and related equipment other than as required or reasonably inferable from this Agreement.

p. Making revisions to design documents after they have been approved by the City when revisions are due to causes beyond the control and not the fault or partial fault of the Contractor.

q. Design, coordination, management, expediting and other services supporting the procurement of materials to be obtained, or work to be performed, by the City.

ARTICLE 4

CITY RESPONSIBILITIES

4.1 INFORMATION AND SERVICES PROVIDED BY CITY

4.1.1 The City will provide full information in a timely manner regarding requirements for the Project, including the City's Program and other relevant information.

4.1.2 The City will provide:

a. all available information describing the physical characteristics of the site, including existing conditions, subsurface and environmental studies, reports and investigations;

b. inspection and testing services made during construction at the City's own discretion or as mutually agreed; and

c. unless otherwise provided in the Contract Documents, necessary approvals, site plan review, rezoning, easements and assessment, including legal and other required services.

d. The City shall furnish all information, requirements, reports, data, surveys and instructions in its possession relative to the Project for Contractor's use as Contractor may deem appropriate.

4.2 CITY RESPONSIBILITIES DURING DESIGN PHASE

4.2.1 The City will provide the Program at the inception of the Design Phase and will review and approve schedules, estimates, Schematic Design Documents, Design Development Documents and Construction Documents furnished during the Design Phase as set forth in Paragraph 3.1.

4.3 CITY RESPONSIBILITIES DURING CONSTRUCTION PHASE

4.3.1 The City will review and approve the Schedule of the Work as set forth in Subparagraph 3.3.4.

4.3.2 If the City and Project Manager know or become informed of any error, omission or failure to meet the requirements of the Contract Documents or any fault or defect in the Work, the City and Project Manager will give prompt written notice to the Contractor.

4.3.3 For this specific project, the City and Project Manager will communicate with the Contractor's Subcontractors, suppliers and Engineer only through the Contractor. The City and Project Manager will have no contractual obligations to Subcontractors, suppliers, or the Engineer.

4.4 THE PROJECT MANAGER

The City's Project Manager is Mike Traynor.

The Project Manager:

a. is employed by the City as Project Manager

b. will be fully acquainted with the Project;

c. will furnish the information and services required of the City pursuant to Paragraph 4.1 so as not to delay the Contractor's Work; and

d. will have authority to bind the City in all matters requiring the City's approval, authorization or written notice, unless such authority and/or action is limited by law or City policy to the City Council or City Administration. If the City changes their representative or the representative's authority as listed above, the City will notify the Contractor in advance in writing.

ARTICLE 5

SUBCONTRACTS

Work not performed by the Contractor with its own forces shall be performed by Subcontractors.

5.1 SUBCONTRACTOR AND MAJOR SUPPLIER SELECTIONS

5.1.1 There are two ways to select Subcontractors and major Suppliers prior to submission of any GMP Proposal. They are:

a) A combination of qualifications and price derived through competitive bidding;

b) Qualitative selection with the subsequent negotiation of a price that is reasonable, a prudent use of public funds and in the City's best interest.

Absent special circumstances documented in writing by the Contractor as set forth below, the combination of qualifications and price derived through competitive bidding process shall be used to select Subcontractors and Major Suppliers. The City has the sole discretion as to whether or not to allow the purely qualitative selection of Subcontractors and Suppliers. In any event, Contractor shall ensure compliance with Arizona Revised Statutes § 34-603(C)(2)(c), (e)(i-ii) and as they may be further modified relative to the selection of Subcontractors and Major Suppliers.

5.1.2 The City may approve the selection of a Subcontractor(s) or Supplier(s) based only on their qualifications when the Contractor can demonstrate, in writing, that it is in the best interest of the Project and that the selection process will constitute a prudent use of public funds.

5.1.3 A purely qualification based selection of a Subcontractor(s) or Supplier(s) should only occur prior to the submittal of any applicable GMP Proposal.

5.1.4 The Contractor will prepare a Subcontractor or Supplier selection plan and submit the plan to the City for approval. The Contractor shall apply the plan in the evaluation of the qualifications of a Subcontractor(s) or Supplier(s) and provide the City with its review and recommendation.

5.1.5 The Contractor must receive City approval of the selected Subcontractor(s) or Supplier(s). If the Contractor is to self-perform under this alternative the Contractor must submit a detailed explanation and demonstration of the cost of the work it will self-perform. The Contractor must further provide documentation to demonstrate that for any work that is self-performed, the cost of any such work is a reasonable and prudent use of public funds. The City must approve the Contractor self-performance of any part of the work and the cost therefore prior to accepting any GMP proposal.

5.1.6 The Contractor will negotiate costs for services/supplies from each Subcontractor or Supplier selected under this method.

5.1.7 Within three (3) days of negotiating cost for services/supplies from all Subcontractors or Suppliers selected under this method, the Contractor shall then prepare a report for the City's approval identifying the recommended Subcontractor or Supplier for each category of the Work to be performed. The report shall be in a format approved by the City's representative and shall include, among other things, the amount of each such cost. The Contractor may, at its discretion or at the request of the City's representative, request written verification of any costs selected. The Contractor shall provide an explanation of the qualifying factors for each selection.

5.1.8 In all other cases, Contractor shall select Subcontractors and Major Suppliers pursuant to the following process which includes a combination of qualifications and price derived through competitive bidding or as may otherwise be agreed in writing by the parties. Contractor shall ensure that any such process is fully compliant with the above referenced Arizona law.

5.1.9 The Contractor will develop Subcontractor interest, submit the names of a minimum of three qualified Subcontractors selected pursuant to a qualifications based procedure, for each trade in the Project for approval by the City and solicit bids for the various construction categories. If there are not three qualified Subcontractors available for a specific trade or there are extenuating circumstances warranting such, the Contractor may request approval by the City to submit less than three names. Without prior approval by the City, no change in the City-approved Subcontractors will be allowed.

5.1.10 If the Contractor desires to self-perform certain portions of the construction, it shall comply with and be subject to the requirements set forth in paragraph 5.1.5.

5.1.11 If the City objects to any nominated Subcontractor or to any nominated self-performed construction for good reason, the Contractor will nominate a substitute Subcontractor.

5.1.12 The Contractor will distribute drawings and specifications, and when appropriate, conduct a pre-bid conference with prospective Subcontractors.

5.1.13 The Contractor shall receive, open, record and evaluate the bids. The apparent low bidders will be interviewed to determine the responsiveness of their proposals. In evaluating the responsiveness of bid proposals the Contractor, in addition to bid price, shall consider the following factors: past performance on similar projects, qualifications and experience of personnel assigned, quality management plan, approach or understanding of the work to be performed, and performance schedule to complete the Work. The final evaluation of Subcontractor bids will be done with the City Representative in attendance to observe and witness the process. The Contractor will resolve any Subcontractor bid withdrawal, protest or disqualification in connection with the award at no increase in the cost of the construction.

5.1.14 Upon completion of the Subcontractor selection process, the Contractor shall submit a summary report to the City of the entire Subcontractor selection process. The report will indicate, by bid process, all Subcontractors contacted to determine interest, the Subcontractors solicited, the bids received and costs negotiated, compliance with Arizona law as cited in paragraph 5.1.1(b) and the selected Subcontractors for each category of Work.

5.1.15 The selected Subcontractors will provide a schedule of values, which will be used to create the overall project schedule of values.

5.1.16 Contractor shall employ only Subcontractors who are duly licensed in Arizona and qualified to perform the Work per the requirements of the Contract Documents.

5.1.17 Regardless of the selection procedure, the Contractor is responsible for ensuring that the costs of the Subcontractor's and/or Supplier's services are reasonable and a prudent use of public funds.

5.1.18 Regardless of the selection procedure and in any case, the Contractor is solely responsible for the cost and performance of the selected Subcontractors or Suppliers. The City's approvals under this section are not and shall not be construed to be a waiver, in part or in whole of Contractor's responsibility and obligation to perform as set forth in this Agreement or subsequent Construction Agreement or GMP and for the cost or less than the cost set forth in any GMP to which the parties agree.

5.1.19 Each subcontract agreement for a portion of the Work is hereby assignable by the Contractor to the City provided that:

1. Assignment is effective at the sole option of the City and only upon termination of the Contract for cause, and only for those subcontract agreements which the City determines to accept by notifying the subcontractor in writing, and

2. Assignment is subject to the prior rights of the surety obligated under the Bonds relating to the Contract.

5.2 RETAINING SUBCONTRACTORS

The Contractor shall not retain any Subcontractor to whom the City has a reasonable and timely objection. The Contractor shall not be required to retain any Subcontractor to whom the Contractor has a reasonable objection. Any objections shall be made in writing and shall identify the specific nature of the objection.

5.3 MANAGEMENT OF SUBCONTRACTORS

The Contractor shall be responsible for the management of the Subcontractors in the performance of their work.

5.4 ASSIGNMENT OF SUBCONTRACT AGREEMENTS

The Contractor shall provide for assignment of subcontract agreements in the event that the City terminates this Agreement for cause as provided in Paragraph 12.2. Following such termination, the City will notify in writing those subcontractors whose assignments will be accepted, subject to the rights of sureties.

ARTICLE 6

CONTRACT TIME

6.1 COMMENCEMENT OF THE WORK

The Work shall commence on or about the date established by Amendment and shall proceed in general accordance with the Preliminary Master Schedule of Work, or subsequent approved schedules pursuant to articles 3.1.2 and 3.3.4.

6.2 SUBSTANTIAL AND FINAL COMPLETION

6.2.1 At such time as a GMP is accepted, a date of Substantial Completion of the Work shall be established as set forth in an Amendment. If a GMP is not established and the parties desire to establish a date of Substantial Completion, it shall be set forth in an Amendment. If such a date is established, time shall be of the essence of this Agreement.

6.2.2 The Contractor acknowledges that if Substantial Completion is not attained by the Scheduled Substantial Completion Date, or within any proper extension granted in writing by the City, City will suffer damages which are difficult to accurately specify and ascertain. The Contractor agrees that if Substantial Completion is not attained by the Scheduled Substantial Completion Date (such date hereinafter referred to as the "LD Date"), The Contractor agrees to pay Liquidated Damages, and further agrees that the City may deduct any or all sums for liquidated damages from any unpaid monies. Liquidated Damages are agreed to equal the sum of One Thousand dollars per day ($1,000.00) for each day that actual Substantial Completion extends past the LD Date. All parties agree that the above stated liquidated damages amount and rate is reasonable given the needs, extreme scheduling and space difficulties, and disruption of the City in its educational process should the Work not be Substantially Complete by the LD Date.

6.2.3 Final Acceptance/Completion. Upon receipt of written notice that the Work or identified portions of the Work is ready for final inspection and acceptance, City and Contractor will jointly inspect to verify that the remaining items of Work have been completed as set forth in Section 2.3.7. Upon the City's determination that Final Completion has been achieved, the City will issue a Final Acceptance/Completion Letter and payment pursuant to Section 10.2. Contractor understands that if Final Acceptance/Completion is not attained within the Contract Time as adjusted, City will suffer damages which are difficult to determine and accurately specify. Contractor agrees that if Final Acceptance/Completion is not attained within the Contract Time as adjusted, Contractor shall pay the City ($1,000.00) as liquidated damages for each Day that Final Completion extends beyond the date determined by the Contract Time as adjusted and further agrees that such amount is reasonable under the circumstances.

6.3 DELAYS IN THE WORK

6.3.1 If due to unexpected causes beyond the Contractor's control for which the City is responsible, and not due entirely or in part, to Contractor's or Subcontractors of Contractor's, actions or inactions a delay is incurred in the progress of the Work and Contractor incurs actual direct damages from such delay; then City and Contractor shall engage in negotiations regarding the above. In such case, the GMP, compensation for Design Phase Services, the Contractor's Fee and/or the date of Substantial Completion may be modified by written agreement as appropriate. Such causes shall include but not be limited to: changes ordered in the Work, acts or omissions of the City and Project Manager or separate contractors employed by the City, preventing the Contractor from performing the Work, Hazardous Materials, differing site conditions not reasonably foreseeable, adverse weather conditions not reasonably anticipated, fire not due to fault or partial fault of the Contractor.

6.3.2 In the event delays to the project are encountered for any reason, all parties agree to undertake reasonable steps to mitigate the effect of such delays.

ARTICLE 7

COMPENSATION

7.1 DESIGN PHASE COMPENSATION

7.1.1 The cost of services performed directly by the Engineer shall be identified in Amendment No. 1, attached hereto, and subsequently as a line item in the GMP, shall be computed separately, and is independent from the Contractor's compensation for work or services directly performed by the Contractor. These costs shall be shown as separate items on the application for payment for both the Design Phase fees, and services through project completion. If an Engineer is retained by the Contractor, the payments to the Engineer shall be as detailed in a separate agreement between the contractor and Engineer and shall be the responsibility of the Contractor.

7.1.2 The City will compensate the Contractor in the amounts specified in Amendment 1 for Design and Preconstruction Services performed during the Design Phase as described in Paragraph 3.1 and preparation of a GMP proposal as described in Paragraph 3.2.

7.1.3 Payments for Design Services will be due and payable within thirty (30) days following approval of the Contractor's monthly invoice to the City. Payments due the contractor remaining unpaid for more than thirty (30) days from the due date of the invoice will bear interest at the legal rate.

7.2 CONSTRUCTION PHASE COMPENSATION

7.2.1 If a GMP is established and accepted by the City pursuant to Amendment No. 2, attached hereto, the City will, up to the amount of the GMP established in a GMP Amendment, and as it may be adjusted under Article 9, compensate the Contractor for Work performed following the commencement of Construction on the following basis:

a. the Cost of the Work as allowed in Article 8; and

b. the Contractor's Fee, including General Conditions, as detailed in the GMP Amendment, subject to adjustment as provided in Paragraph 7.4.1. The Contractor's Fee will be paid proportionately to the ratio that the monthly cost of the Work bears to the total estimated Cost of the Work.

The City shall not pay any amount for construction or construction services absent a prior written acceptance of a GMP and a GMP amendment or alternative written agreement between the parties.

7.2.2 The compensation to be paid under this Paragraph will be limited to the GMP established by Amendment, as the GMP may be adjusted under Article 9. In the event

the Cost of the Work plus the Contractor's Fee shall be less that the GMP as adjusted by Change Orders, the resulting savings shall be credited back to the City.

7.2.3 Payment for Construction Phase Services will be as set forth in Article 10. If Design Services continue to be provided after construction has commenced, the Contractor shall also continue to be compensated as provided in Paragraph 7.2, or as mutually agreed.

7.3 CONTRACTOR'S FEE

The Contractor's Fee includes the following if they are directly related to the Work:

a. salaries and other mandatory or customary compensation of the Contractor's employees at its principal and branch offices, except employees listed in Subparagraph 8.2.2;

b. general and administrative expenses of the Contractor's principal and branch offices other than the field office, except as may be expressly included in Article 8; and

c. the Contractor's capital expenses, including interest on the Contractor's capital employed for the Work.

d. costs related to the Contractor's safety program.

7.4 ADJUSTMENT IN THE CONTRACTOR'S FEE

7.4.1 Adjustment of the Contractor's Fee shall be made as follows:

a. for changes in the Work as provided in Article 9, the Contractor's Fee shall be adjusted as follows as mutually agreed by the parties:

b. for delays in the Work not caused, or not caused in part, by the Contractor, Subcontractor, anyone directly or indirectly employed by them or anyone for whose acts they may be liable. There will be an equitable adjustment in the Contractor's Fee to compensate the Contractor for increased expenses actually incurred which are directly related to the Project; and

c. if the Contractor is placed in charge of managing the replacement of an insured or uninsured loss not caused by or the fault of the Contractor, Subcontractors or other parties for whom Contractor and/or Subcontractor are responsible, the contractor shall be paid an additional Fee in the same proportion that the Contractor's Fee bears to the estimated Cost of the Work, or as otherwise agreed to by the parties.

7.5 SEGREGATION OF DESIGN AND ENGINEERING SERVICES

7.5.1 Contractor and City agree that design and engineering services under this Agreement are substantial in relation to the other services required by this Agreement and are not inconsequential or merely incidental to the business of Contractor. Contractor and City further agree that assessment of Arizona Transaction Privilege Taxes on such services is not appropriate and that Contractor shall not charge City and City shall not be responsible for payment of, directly or indirectly, any such taxes arising from the design and engineering services provided under this Agreement. Contractor affirms the need and his obligation to segregate and separately document, account and charge design and engineering services separately from construction services so as to avoid any inappropriate assessment of Arizona Transaction Privilege Taxes on such services. Contractor will indemnify City against the payment of any such taxes arising from the design and engineering services provided under this Agreement in the event such taxes are assessed as a result of Contractor's failure to properly segregate, separate, document, account and charge for said design and engineering services not otherwise required by operation of law. Should the separate accounting and documentation of design and engineering services be found to be void or otherwise barred by law as a means of precluding the assessment of Arizona Transaction Privilege Taxes, the City will be responsible for the payment of applicable taxes provided that any such taxes are not assessed as a result of any act or omission by Contractor.

ARTICLE 8

COST OF THE WORK

The City agrees to pay the Contractor for the Cost of the Work as defined in this Article. This payment shall be in addition to the Contractor's Fee stipulated in Article 7. However, in no event will the City pay the Contractor total compensation greater than the amount of the GMP established by Amendment, and as it may be adjusted under Article 9.

8.1 COST ITEMS FOR DESIGN PHASE SERVICES

8.1.1 Compensation for Design Phase Services as provided in Paragraph 7.1.

8.2 COST ITEMS FOR CONSTRUCTION PHASE SERVICES

8.2.1 Wages paid for labor in the direct employ of the Contractor in the performance of the Work.

8.2.2 Salaries of Contractor's employees when stationed at the field office, in whatever capacity employed, employees engaged on the road expediting the production or transportation of material and equipment, and employees from the principal or branch office performing the functions listed below, if such functions are directly related to the Work.

8.2.3 Cost of all employee benefits and taxes including but not limited to, unemployment compensation, Social Security, health, welfare, retirement and other fringe benefits as required by law, labor agreements, or paid under the Contractor's

standard personnel policy, insofar as such costs are paid to employees of the Contractor who are included in the Cost of the Work under Subparagraphs 8.2.1 and 8.2.2.

8.2.4 Reasonable transportation, travel and hotel expenses of the Contractor's personnel incurred in connection with the Work.

8.2.5 Cost of all materials, supplies and equipment incorporated in the Work, including costs of inspection, testing, transportation, storage and handling.

8.2.6 Payments made by the Contractor to Subcontractors for work performed under this Agreement.

8.2.7 Fees and expenses for design services procured by the Contractor except as provided by the Engineer and compensated in Paragraph 7.1.

8.2.8 Cost, including transportation and maintenance of all materials, supplies, equipment, temporary facilities and hand tools not owned by the workers that are used or consumed in the performance of the Work, less salvage value; and cost less salvage on such items used, but not consumed that remain the property of the Contractor. The Contractor shall reimburse the City for the salvage value of items used or salvage the items to the City.

8.2.9 Rental charges of all necessary machinery and equipment, exclusive of hand tools owned by workers, used at the site of the Work, whether rented from the Contractor or others, including installation, repair and replacement, dismantling, removal, maintenance, transportation and delivery costs at rental charges consistent with those prevailing in the area. Rates for Contractor-owned equipment, quantities of equipment and actual use of equipment shall be subject to the City's prior approval and shall be submitted in the appropriate, detailed, specific, line items in the schedule of values, as part of any GMP proposal for the Work including the use of such equipment. In order for the City to responsibly monitor the equipment costs, the use, non-use or other status of said equipment shall be specifically and fully documented in writing in daily reports as a precondition for payment of said costs. City shall not be required to pay charges for such Contractor-owned equipment at rates invoiced unless the above conditions have been met, the rates are reasonable for the project's geographical area and the invoice reflects actual use as documented in daily reports.

Contractor shall identify all such equipment that may be required under this Contract and the expected amount of time equipment will be used in the performance of this Contract. Contractor shall develop an equipment pricing list, using the Rental Rate Blue Book (Bluebook), or such other rate book as the parties may mutually agree, to develop an equipment pricing list upon which the parties agree. The equipment pricing list shall be attached as an exhibit to any GMP proposal, and shall be used to support the line item amounts for such equipment in the GMP, and as a basis for equipment charges in any change orders. This equipment list shall identify the appropriate Bluebook, or other rate book, ownership rate (monthly, weekly, daily, and hourly) used and written justification therefor. Notwithstanding the foregoing, it remains the Contractor's obligation to demonstrate that the rental charges set forth in the GMP and actually charged are reasonable and appropriate for a project in Cottonwood, Arizona, and charges in excess of those reasonable rates will not be paid.

8.2.10 Cost of premiums for normal and customary contractor's and subcontractor's liability, workman's compensation and builders risk insurance as outlined in Article 11, is to be identified as a separate line item within the GMP. Professional liability insurance cost directly attributable to the actual Cost of Work may be included in the GMP as a separate line item; however, professional liability cost relative to the design phase of this Agreement and overall design liability was included in the design phase cost and shall not be included in the GMP or payable as part of the Cost of Work.

8.2.11 Sales, use, gross receipts or other taxes, tariffs or duties related to the Work for which the Contractor is liable.

8.2.12 Permits, fees, and licenses, as well as testing and inspection of all materials as may be required by construction codes or generally accepted industry practice.

8.2.13 All costs associated with establishing, equipping, operating, maintaining and demobilizing the field office.

8.2.14 Reproduction costs, photographs, cost of telegrams, facsimile transmissions, long distance telephone calls, data processing services, postage, express delivery charges, telephone service at the site and reasonable petty cash expenses at the field office.

8.2.15 All water, power and fuel costs necessary for the Work.

8.2.16 Cost of removal of all non-hazardous substances, debris and waste materials.

8.2.17 Costs incurred due to an emergency affecting the safety of persons and/or property, excluding such costs related to the negligence or willful acts of the Contractor or any person or entity for whom the Contractor is responsible.

8.2.18 All costs directly incurred in the performance of the Work or in connection with the Project, and not included in the Contractor's Fee as set forth in Article 7, which are reasonably inferable from the Contract Documents as necessary to produce the intended results.

8.3 DISCOUNTS

All discounts for prompt payment shall accrue to the City to the extent payments are made by the City. To the extent payments are made with funds of the Contractor, all cash discounts shall accrue to the Contractor, but shall be appropriately recorded, accounted and available for review by the City. All trade discounts, rebates and refunds, and all returns from sale of surplus materials and equipment, shall be credited to the Cost of the Work.

8.4 SITE INVESTIGATION AND CONDITIONS AFFECTING THE WORK

8.4.1 Contractor acknowledges that it has taken steps reasonably necessary to ascertain the nature and location of the Work, and that it has investigated and satisfied itself as to the general and local conditions which can affect the work or its cost, including but not limited to:

a. conditions bearing upon transportation, disposal, handling, and storage of materials;

b. the availability of labor, water, electric power, and roads

c. uncertainties of weather or physical conditions at the site;

d. the conformation and conditions of the ground; and

e. the character of equipment and facilities needed preliminary to and during work performance.

ARTICLE 9

CHANGES IN THE WORK

Changes in the Work, which are within the general scope of this Agreement, may be accomplished by Change Order or other written instrument without invalidating this Agreement.

9.1 CHANGE ORDERS

A Change Order is a written instrument, issued after execution of this Agreement, signed by the City and Contractor stating their agreement upon a change and the adjustment in the GMP, compensation for Design Phase Services, the Contractor's Fee and/or the date of Substantial Completion. Each adjustment in the GMP resulting from a Change Order shall clearly separate the amount attributable to compensation for Design Phase Services, other cost of the Work and the Contractor's Fee.

9.2 DETERMINATION OF COST

An increase or decrease in the GMP resulting from a change in the Work shall be determined by one or more of the following methods:

a. unit prices set forth in this Agreement or as subsequently agreed;

b. a mutually accepted, itemized lump sum;

c. costs determined as defined in Paragraph 7.2 and Article 8 and a mutually acceptable Contractor's Fee as determined in Subparagraph 7.4.1.

d. if an increase or decrease cannot be agreed to as set forth in subparagraphs 9.2.a through 9.2.c and the City issues a written order for the Contractor to proceed with the change, the cost of the change in the Work shall be determined by the reasonable expense or savings of the performance of the Work resulting from the change. If there is a net increase in the GMP, the Contractor's Fee shall be adjusted as set forth in Subparagraph 7.4.1. In case of a net decrease in the GMP, the

Contractor's Fee shall not be adjusted. The Contractor shall maintain a documented, itemized accounting evidencing the expenses and savings.

9.3 NO OBLIGATION TO PERFORM

The Contractor shall not be obligated to perform changed Work until a Change Order or other written instrument has been executed by the City and Contractor, except as provided in Subparagraph 9.2.d.

9.4 ADJUSTMENT OF UNIT PRICES

If a proposed Change Order alters original quantities to a degree that application of previously agreed to unit prices would be inequitable to either the City or the Contractor, the unit prices and the GMP shall be equitably adjusted.

9.5 UNKNOWN CONDITIONS

If in the performance of the Work the Contractor finds latent, concealed or subsurface physical conditions which differ from the conditions the Contractor should have reasonably anticipated, or substantially different from available soils reports, or if physical conditions are substantially and materially different from those normally encountered and generally recognized as inherent in the kind of work provided for in this Agreement at this location (occurrence of shifting and expansive soils, including clay soils and sandstone expressly noted as commonly occurring in these areas), then the GMP compensation for Design and Construction Phase Services, the Contractor's Fee, and/or the date of Substantial Completion may be equitably adjusted by Change Order or other written instrument within ten (10) days after the conditions are first observed for delays actually and directly arising from said conditions.

9.6 CLAIMS FOR ADDITIONAL COST OR TIME

For any claim for an increase in the GMP, compensation for Design Phase Services, the Contractor's Fee and/or an extension in the date of Substantial Completion, the Contractor shall give the City written notice of the claim within ten (10) days after the occurrence giving rise to the claim or within ten (10) days after the Contractor first recognizes the condition giving rise to the claim, whichever is later. Except in an emergency, notice shall be given before proceeding with the Work. Claims for design and estimating costs incurred in connection with possible changes requested by the City, but which do not proceed, shall be made within ten (10) days after the decision is made not to proceed. Any change in the GMP, compensation for Design Phase Services, the Contractor's Fee, and/or date of Substantial Completion resulting from such claim shall be authorized by Change Order or other written instrument.

9.7 EMERGENCIES

In any emergency affecting the safety of persons and/or property, the Contractor shall act, at its discretion, to prevent threatened damage, injury or loss. Any change in the GMP, compensation for Design Phase Services, the Contractor's Fee and/or extension of the date of Substantial Completion on account of emergency work shall be determined as provided in this Article.

ARTICLE 10

PAYMENT FOR CONSTRUCTION PHASE SERVICES

10.1 PROGRESS PAYMENTS

10.1.1 At the last construction meeting of each month after the Construction Phase has commenced, the Contractor shall submit to the City a draft Application for Payment consisting of the Cost of the Work performed up to the last day of the month, including the cost of material stored on the site or at other locations approved by the City, along with a proportionate share of the Contractor's Fee. The format of the application document shall be as provided to the Contractor by the City. Prior to submission of the next Application for Payment, the Contractor shall furnish to the City a statement accounting for the disbursement of funds received under the previous Application. The extent of such statement shall be as agreed upon between the City and Contractor. All payments shall be made pursuant to and in compliance with A.R.S. § 34-609(B)(2-7), (C), (F-K).

10.1.1.1 Ten percent (10%) retainage will be held from each Progress Payment until fifty percent (50%) of the total Project is deemed complete by the City. At the fifty percent (50%) completion, the retention may be reduced to five percent (5%) subject to the relevant Arizona Revised Statutes. All retention shall be withheld pursuant to and in compliance with A.R.S. § 34-609(B)(2-7), (C), (F-K).

10.1.1.2 Any securities submitted by Contractor in lieu of retainage as may be allowed by law, shall be deposited in an escrow account as directed by the City. The City shall be listed as Payee or Multiple Payee with Contractor on said securities.

10.1.2 Within fourteen (14) days after receipt by the City of each monthly Application for Payment which has been certified by the Architect and is approvable by the City, the City will pay directly to the Contractor the appropriate amount for which Application for Payment is made, less amounts previously paid by the City and less amounts sufficient to pay expenses the City reasonably expects to incur in correcting deficiencies which are set forth in writing and provided to the Contractor.

10.1.3 The Contractor warrants and guarantees the title to all Work, materials and equipment covered by an Application for Payment, whether incorporated in the Project or not, will pass to the City upon receipt of such payment by the Contractor free and clear of all liens, claims, security interests or encumbrances, hereinafter referred to as "liens."

10.1.4 The City's progress payment, occupancy or use of the Project, whether in whole or in part, shall not be deemed as acceptance of any Work not conforming to the requirements of the Contract Documents.

10.1.5 Upon Substantial Completion of the Work, the City will pay the Contractor the unpaid balance of the Cost of the Work, compensation for Design Phase Services and the Contractor's Fee, less a sum equal to the Contractor's estimated cost of completing any unfinished items and correction of any noted defects as agreed to between the City

and Contractor as to extent and time for completion. The City thereafter will pay the Contractor monthly the amount retained for unfinished items or correction of noted defects as each item is completed.

10.2 FINAL PAYMENT

10.2.1 Final payment, consisting of the unpaid balance of the Cost of the Work, compensation for Design Services and the Contractor's Fee shall be due and payable when the Work is fully completed and accepted by the City. Before issuance of final payment, the City will request satisfactory evidence that all payrolls, materials bills and other indebtedness connected with the Work have been paid or otherwise satisfied.

10.2.2 In making final payment the City waives all claims except for:

a. outstanding liens;

b. deficient design, improper workmanship or defective materials;

c. Work not in conformance with the Contract Documents;

d. terms of any special warranties required by the Contract Documents;

e. right to audit Contractor records for a period of five years; and

f. claims previously made in writing and which remain unsettled.

10.2.3 In accepting final payment, the Contractor waives all claims except those previously made in writing and which remain unsettled.

ARTICLE 11

INSURANCE AND BONDS

11.1 INSURANCE REPRESENTATIONS AND REQUIREMENTS

11.1.1 Without limiting any obligations or liabilities of Contractor, Contractor shall purchase and maintain, at its own expense, hereinafter stipulated minimum insurance with insurance companies duly licensed by the State of Arizona with an AM Best, Inc. rating of A- or above with policies and forms satisfactory to the City. Failure to maintain insurance as specified herein may result in termination of this Agreement at the City's option.

11.1.2 By requiring insurance herein, City does not represent that coverage and limits will be adequate to protect Contractor. City reserves the right to review any and all of the insurance policies and/or endorsements cited in this Agreement but City has no obligation to do so. Failure to demand such evidence of full compliance with the insurance requirements set forth in this Agreement or failure to identify any insurance deficiency shall not relieve Contractor from, nor be construed or deemed a waiver of, its

obligation to maintain the required insurance at all times during the performance of this Agreement.

11.1.3 All insurance coverage and self insured retention or deductible portions, except Workers' Compensation insurance and Professional Liability insurance, if applicable, shall name, to the fullest extent permitted by law for claims arising out of the performance of the work included in this Agreement, the City, the Project Manager, their agents, representatives, officers, directors, officials and employees as Additional Insured as specified under the respective coverage sections of this Agreement.

11.1.4 All insurance required herein shall remain in effect until the City has issued a certificate of Final Completion for the entire Work, and the Contractor and the City have agreed in writing that the work is covered under insurance designed for the purpose of providing coverage for the accepted Work while occupied.

11.1.5 Contractor's insurance shall be primary insurance with respect to performance of the work included in this Agreement and in the protection of City as an Additional Insured. The policies required by the Contract Documents shall be endorsed to include the City, the Project Manager, as well as their agents, officials, and employees as insured parties and shall stipulate that the insurance afforded by the policies shall be by primary insurance and that any insurance, self-insured retention, deductibles, or risk retention programs maintained or participated in by the City, or their agents, officials or employees shall be excess and not contributory to insurance required herein.

11.1.6 In the event any insurance policies required by this Agreement are written on a "claims made" basis, coverage shall extend, either by keeping coverage in force or purchasing an extended reporting option, for three years past completion and acceptance of the Work or services. Such continuing coverage shall be evidenced by submission of annual Certificates of Insurance citing applicable coverage is in force and contains the provisions as required herein for the three-year period.

11.1.7 All policies, including Workers' Compensation insurance, shall contain a waiver of rights of recovery (subrogation) against the City, its agents, representatives, officials, officers and employees for any claims arising out of the work or services of Contractor. Contractor shall arrange to have such subrogation waivers incorporated into each policy via formal written endorsement thereto.

11.1.8 The policies set forth in these requirements may provide coverage that contains deductibles or self-insured retention amounts. Such deductibles or self-insured retention shall not be applicable with respect to the policy limits provided to City. Contractor shall be solely responsible for any such deductible or self-insured retention amount. City, at its option, may require Contractor to secure payment of such deductible or self-insured retention by a surety bond or irrevocable and unconditional letter of credit.

11.1.9 If any work under this Agreement is subcontracted in any way, Contractor shall execute written agreement with Subcontractor containing the indemnification provisions set forth in Section 11.6 below and insurance requirements set forth herein protecting the City and Contractor. At Contractor's option and at Contractor's risk, Contractor may, subject to the City's prior, written approval, which approval shall not be unreasonably withheld, allow subcontractors to deviate from these insurance requirements due to insurance market availability or affordability issues. Contractor shall

be responsible for executing the agreement with Subcontractor and obtaining certificates of insurance verifying the insurance requirements.

11.1.10 Prior to commencing any work or services under this Agreement, Contractor shall furnish the City with certificate(s) of insurance, or formal endorsements as required by this Agreement, issued by the insurers of the Contractor, Consultants, and Subcontractors as evidence that policies are placed with acceptable insurers as specified herein and provide the required coverage, conditions and limits of coverage specified in this Agreement and that such coverage and provisions are in full force and effect. If a certificate of insurance is submitted as verification of coverage, the City will reasonably rely upon the certificate of insurance as evidence of coverage but such acceptance and reliance shall not waive or alter in any way the insurance requirements or obligations of this Agreement. If any of the above-cited policies expire during the life of this Agreement, it shall be Contractor's responsibility to forward renewal certificates within ten days after the renewal date containing all the aforementioned insurance provisions. Additionally, certificates of insurance submitted without referencing this Agreement will be subject to rejection and returned or discarded. Certificates of insurance shall specifically include the following provisions:

a. The City, the Project Manager, their agents, representatives, officers, directors, officials and employees are Additional Insureds as follows:

(i) Commercial General Liability - Under Insurance Services Office, Inc., ("ISO") current Form CG 20 10 or equivalent.

(ii) Auto Liability - Under current ISO Form CA 20 48 or equivalent.

(iii) Excess Liability - Follow Form to underlying insurance.

b. Contractor's insurance shall be primary insurance as respects performance of the work included in this Agreement.

c. All policies, including Workers' Compensation, waive rights of recovery (subrogation) against City, its agents, representatives, officers, officials and employees for any claims arising out of work or services performed by Contractor under this Agreement.

d. A 60-day advance notice cancellation provision. If ACORD certificate of insurance form is used, the phrases in the cancellation provision "endeavor to" and "but failure to mail such notice shall impose no obligation or liability of any kind upon the company, its agents or representatives" shall be deleted. Certificate forms other than ACORD form shall have similar restrictive language deleted.

e. Certificates of Insurance and any notice of cancellation or material change should be addressed as follows:

11.2 REQUIRED INSURANCE COVERAGE

11.2.1 Contractor shall maintain "occurrence" form Commercial General Liability insurance with an unimpaired limit of not less than $2,000,000 for each occurrence, $2,000,000 Products and Completed Operations Annual Aggregate and a $2,000,000 General Aggregate Limit. The policy shall cover liability arising from premises, operations, independent contractors, products-completed operations, personal injury and advertising injury. Coverage under the policy will be at least as broad as ISO current policy form CG 00 010 or equivalent thereof, including but not limited to, separation of insured's clause. Further, the policy shall include coverage for the hazards commonly referred to as X (explosion), C (collapse), U (underground). The products and completed operations coverage shall extend for five years past acceptance, cancellation or termination of the Work. Said policy shall contain a severability of interest provision. To the fullest extent allowed by law, for claims arising out of the performance of this Agreement, the City, the Project Manager, their agents, representatives, officers, officials and employees shall be cited as an Additional Insured under ISO current Commercial General Liability Additional Insured Endorsement form CG 20 10, or equivalent, which shall read "Who is an Insured (Section II) is amended to include as an insured the person or organization shown in the Schedule, but only with respect to liability arising out of "your work" for that insured by or for you." If any Excess insurance is utilized to fulfill the requirements of this paragraph, such Excess insurance shall be "follow form" equal or broader in coverage scope than underlying insurance.

11.2.2 If this Agreement is the subject of any professional services or work, or if Contractor engages in or procures any professional services or work adjunct or residual to performing the work under this Agreement, Contractor shall maintain Professional occurrence based Liability insurance covering negligent errors and omissions arising out of the work or services performed by Contractor, or anyone employed by Contractor, or anyone for whose negligent acts, mistakes, errors and omissions Contractor is legally liable, with a liability insurance limit of $1,000,000 each claim and $1,000,000 all claims. The Contractor's professional liability policy shall include a per project endorsement providing that the limits of such insurance specified in Contract Documents shall apply to the project without erosion of such limits by other claims or occurrences.

11.2.3 Contractor shall maintain Business Automobile Liability insurance with a limit of $1,000,000 each occurrence on Contractor's owned, hired and non-owned vehicles assigned to or used in the performance of the Contractor's work or services under this Agreement. Coverage will be at least as broad as ISO coverage code "1" "any auto" current policy form CA 00 01 or equivalent thereof. To the fullest extent allowed by law, for claims arising out of the performance of this Agreement, the City, the Project Manager, their agents, representatives, officers, directors, officials and employees shall be cited as an Additional Insured under ISO Business Auto policy Designated Insured Endorsement form CA 20 48 or equivalent. If any Excess insurance is utilized to fulfill the requirements of this paragraph, such Excess insurance shall be "follow form" equal or broader in coverage scope then underlying insurance.

11.2.4 Contractor shall maintain Workers' Compensation insurance to cover obligations imposed by federal and state statutes having jurisdiction of Contractor's employees engaged in the performance of work or services under this Agreement and

shall also maintain Employers Liability Insurance of not less than $1,000,000 for each accident, $500,000 disease for each employee and $1,000,000 disease policy limit.

11.2.5 The Contractor shall be responsible for purchasing and maintaining Builder's Risk and Course of Construction insurance to protect the Project from perils of physical loss. The insurance shall provide for the full cost of replacement for the entire Project at the time of any loss. The insurance shall include as named insureds the City, the Project Manager, the Contractor, the Contractor's subcontractors and sub subcontractors and shall insure against loss from the perils of fire and all-risk coverage for physical loss or damage due to theft, vandalism, collapse, malicious mischief, transit, flood, earthquake, testing, resulting loss arising from defective design, negligent workmanship or defective material. The Contractor shall increase the coverage limits as necessary to reflect changes in the estimated replacement cost.

11.3 CERTIFICATES OF INSURANCE

Prior to commencing the Work under this Agreement, Contractor shall furnish the City with certificates of insurance, or formal endorsements as required by this Agreement, issued by Contractor's insurer(s), as evidence that policies providing the required coverage, conditions and limits required by this Agreement are in full force and effect. Unless otherwise specified in this Agreement, in the event any insurance policy(ies) required by this Agreement is(are) written on a "claims made" basis, coverage shall extend for three years past completion and acceptance of the Contractor's work or services and as evidenced by annual certificates of insurance. If a policy does expire during the life of the Agreement, a renewal certificate must be sent to the City 30 days prior to the expiration date. All certificates of insurance required by this Agreement shall be identified by project name. The City reserves the right to request and receive certified copies of any or all of the above insurance policies and/or endorsements.

11.4 CANCELLATION AND EXPIRATION NOTICE

Insurance required herein shall not expire, be canceled, or materially changed without 60 days' prior written notice to the City.

11.5 FAILURE OF COMPLIANCE

Should the Contractor fail to provide and maintain in force any and all insurance, or insurance coverage required by the Contract Documents or by law, or should a dispute arise between the City and any insurance company of Contractor over policy coverage or limits of liability as required herein, the City will be entitled to recover from the Contractor all amounts payable, as a matter of law, to the City or any other parties, including, but not limited to the Project Manager, had the required insurance or insurance coverage been in force. Said recovery will include, but is not limited to, interest for the loss of use of such amounts of money, plus all attorney's fees costs and expenses incurred in securing such determination and any other consequential damages arising out of the failure of the Contractor or insurance company to comply with the provisions of the Contract Documents, or any policy required hereby, or any other requirements regarding insurance imposed by law. Nothing herein shall limit any damages for which Contractor is responsible as a matter of law.

11.6 INDEMNITY

To the fullest extent permitted by law, the Consultant shall indemnify and hold harmless the City and each council member, officer, employee or agent thereof (the City and any such person being herein called an "Indemnified Party"), for, from and against any and all losses, claims, damages, liabilities, costs and expenses (including, but not limited to, reasonable attorneys' fees, court costs and the costs of appellate proceedings) to which any such Indemnified Party may become subject, under any theory of liability whatsoever ("Claims") to the extent that such Claims (or actions in respect thereof) are caused by the negligent acts, recklessness or intentional misconduct of the Consultant, its officers, employees, agents, or any tier of subcontractor in connection with Consultant's work or services in the performance of this Agreement. The amount and type of insurance coverage requirements set forth will in no way be construed as limiting the scope of the indemnity in this Section.

11.7 PERFORMANCE AND PAYMENT BONDS

Bonds shall be provided by Contractor pursuant to and in compliance with A.R.S. § 34-610-611.

11.7.1 After the City and the Contractor have agreed to a GMP but prior to commencing any Construction, the Contractor shall be required to furnish the City with an irrevocable security binding the Contractor to provide faithful performance of the Agreement in the amount of 100% of the percentage of the GMP attributable to Construction, payable to the City. Performance security shall be in the form of a performance bond, as required by Arizona law. If the Contractor fails to execute the security document as required, the Contractor may be found in material default of the Agreement, permitting the City to terminate this Agreement. In case of default the City reserves all rights. All performance bonds shall be executed on State of Arizona approved forms, duly executed by the Bidder as Principal and having as Surety thereon a Surety company approved by the City and holding a Certificate of Authority issued by the Arizona Department of Insurance to transact surety business in the State of Arizona. The conditions and provisions of the bonds regarding the surety's obligation shall follow the form required under A.R.S. § 34-610-611 and 34-222; Subsection G and Subsection F. The cost of the bonds shall be included in the contract sum. Individual sureties are unacceptable. All Insurers and Sureties shall have at the time of submission of bonds A.M. Best's Key Rating Guide of "A-" or better as currently listed in the most recent Best Key Guide, published by the A.M. Best Company.

11.7.2 After the City and the Contractor have agreed to a GMP but prior to commencing Construction, the Contractor shall be required to furnish the City with an irrevocable security for the protection of all persons supplying labor and material to the Contractor or any subcontractor for the performance of any work related to the Agreement. Payment security shall be in the amount of 100% of the portion of the GMP attributable to Construction and be payable to the City. Payment security shall be in the form of a payment bond, as required by Arizona law. All payment bonds shall be executed on State of Arizona approved forms, duly executed by the Bidder as Principal and having as Surety thereon a Surety company approved by the City and holding a Certificate of Authority issued by the Arizona Department of Insurance to transact surety business in the State of Arizona. The conditions and provisions of the bonds regarding the surety's obligation shall follow the form required under A.R.S. § 34-222; Subsection

G and Subsection F. The cost of the bonds shall be included in the contract sum. Individual sureties are unacceptable. All Insurers and Sureties shall have at the time of submission of bonds A.M. Best's Key Rating Guide of "A-" or better as currently listed in the most recent Best Key Guide, published by the A.M. Best Company.

11.7.3 The Contractor shall require the attorney-in-fact who executes the required bond on behalf of the surety to affix thereto a certified and current copy of the Power of Attorney.

11.7.4 Upon the request of any person or entity appearing to be a potential beneficiary of bonds covering payment of obligations arising under the Contract, the Contractor shall promptly furnish a copy of the bonds or shall permit a copy to be made.

ARTICLE 12

TERMINATION OF THE AGREEMENT AND CITY'S RIGHT TO PERFORM CONTRACTOR'S RESPONSIBILITIES

12.1 TERMINATION BY THE CONTRACTOR

12.1.1 Upon fourteen (14) days' written notice to the City, and if the City fails to cure or initiate reasonable action to cure within fourteen (14) days of said notice, the Contractor may terminate this Agreement for any of the following reasons:

a. if the Work has been stopped for a forty-five (45) day period

(i) under court order or order of other governmental authorities having jurisdiction;

(ii) as a result of the declaration of a national emergency or other governmental act during which, through no act, omission or fault of the Contractor, materials are not available; or

b. if the Work is suspended by the City for sixty (60) days;

c. if the City materially delays the Contractor in the performance of the Work;

d. if the City otherwise materially breaches this Agreement.

12.1.2 Upon termination by the Contractor in accordance with Subparagraph 12.1.1, the Contractor shall be entitled to recover from the City payment for all Work executed to the date of termination plus demobilization costs. The City shall not pay any amounts for cost profits or opportunities. The City may subtract reasonable estimates of costs for deficient work from the payments noted above.

12.2 CITY'S RIGHT TO PERFORM CONTRACTOR'S OBLIGATIONS AND TERMINATION BY THE CITY FOR CAUSE

12.2.1 If the Contractor refuses or fails, except in cases for which extension of time is provided, to supply sufficient properly skilled staff or proper materials, or disregards laws, ordinances, rules, regulations, or orders of any public authority jurisdiction, or otherwise substantially or materially violates or breaches any term or provision of this Agreement, and such nonperformance or violation continues without cure for fifteen (15) days after the Contractor receives from the City written notice of such nonperformance or violation, then the City may, without prejudice to any right or remedy otherwise available to the City, terminate this Agreement.

12.2.2 Upon termination of this Agreement by the City, the City will be entitled to furnish or have furnished the Services to be performed hereunder by the Contractor by whatever method the City may deem expedient. Also, in such case, the Contractor shall not be entitled to receive any further payment until completion of the Work; and the total compensation to the Contractor under this Agreement shall be the amount that is equitable under the circumstances. If the City and the Contractor are unable to agree on the amount to be paid under the foregoing sentence, the City will fix an amount, if any, that it deems appropriate in consideration of all of the circumstances surrounding such termination, and will make payment accordingly. The Contractor may dispute the City's assessment of the termination amount by any method of dispute resolution permitted under this Agreement.

12.2.3 Upon the appointment of a receiver for the Contractor, or if the Contractor makes a general assignment for the benefit of creditors, the City may terminate this Agreement, without prejudice to any right or remedy otherwise available to the City, upon giving three (3) working days' written notice to the Contractor. If an order for relief is entered under the bankruptcy code with respect to the Contractor, the City may terminate this Agreement by giving three (3) working days' written notice to the Contractor unless the Contractor or the trustee:

- **a.** Promptly cures all breaches.
- **b.** Provides adequate assurances of future performance.
- **c.** Compensates the City for actual pecuniary loss resulting from such breaches.
- **d.** Assumes the obligations of the Contractor within the statutory time limits.

12.3 TERMINATION BY THE CITY FOR CONVENIENCE

The City may terminate this Agreement, in whole or in part, at any time for the convenience of the City, without prejudice to any right or remedy otherwise available to the City. Upon receipt of notice of termination, the Contractor shall immediately discontinue all services affected as of the stated effective date, unless such notice directs otherwise. In the event of a termination for convenience by the City, the Contractor's sole and exclusive right and remedy shall be to be paid for all work performed and to receive equitable adjustment for all work performed through the date of termination minus City's claims. The Contractor shall not be entitled to be paid any amount as profit for unperformed services or any other consideration for the terminated portions of the work.

12.4 SUSPENSION BY THE CITY FOR CONVENIENCE

12.4.1 The City may order the Contractor in writing to suspend, delay or interrupt all or any part of the Work without cause for such period of time as the City may determine to be appropriate for its convenience.

12.4.2 Adjustments caused by suspension, delay or interruption shall be made for increases in the GMP, compensation for Design Phase Services, the Contractor's Fee and/or the date of Substantial Completion. No adjustment shall be made if the Contractor is or otherwise would have been responsible for or could have mitigated the suspension, delay or interruption of the Work, or if another provision of this Agreement is applied to render an equitable adjustment.

12.5 TERMINATION UPON FAILURE TO OBTAIN GMP

12.5.1 Should there be a failure to establish a GMP and/or should the City elect not to agree to a GMP, this Agreement shall terminate automatically absent any further written agreement between the parties.

12.5.2 Upon such a termination, the City shall pay Contractor fees for design phase services provided under this Agreement, to the date of termination. The City shall not be obligated to pay any other fees, except as may be specifically provided in an addendum or other separate subsequent written agreement of the parties.

ARTICLE 13

DISPUTE RESOLUTION

13.1 MATTERS IN QUESTION/DISPUTE RESOLUTION

In signing this Agreement, Contractor agrees that any cause Contractor may have against the Owner arising in relation to this Procurement and Project, including but not limited to, contract claims and controversies, including claims related to assignees of Contractor, shall be resolved through an Alternative Dispute Resolution (ADR) process as agreed between the parties. If the parties fail to agree to an ADR procedure or if ADR is unsuccessful then disputes shall be resolved by litigation in which venue shall be in Yavapai County Superior Court and liberal joinder shall be allowed.

13.2 OTHER PARTIES

The parties agree that the Engineer, Design Consultants, or other parties involved in the Project, may be joined in the resolution of disputes, at the request of either party.

ARTICLE 14

MISCELLANEOUS PROVISIONS

14.1 ASSIGNMENT

Neither the City nor the Contractor shall assign their interest in this Agreement without the written consent of the other except as to the assignment of proceeds.

14.2 GOVERNING LAW

This Agreement shall be governed by the laws of the State of Arizona and venue shall be the County in which the work is to be constructed.

14.3 SEVERABILITY

The partial or complete invalidity of any one or more provisions of this Agreement shall not affect the validity or continuing force and effect of any other provision.

14.4 NO WAIVER OF PERFORMANCE

The failure of either party to insist, in any one or more instances, on the performance of any of the terms, covenants or conditions of this Agreement, or to exercise any of its rights, shall not be construed as a waiver or relinquishment of such term, covenant, or condition right with respect to further performance.

14.5 TITLES

The titles given to the Articles of this Agreement are for ease of reference only and shall not be relied upon or cited for any other purpose.

14.6 ASBESTOS FREE MATERIALS

14.6.1 The Project is to be constructed by the Contractor with asbestos free materials. A written, notarized statement on company letterhead is to be submitted to the City by Contractor with the final payment request certifying that the Contractor has incorporated no asbestos material into the Project. Final payment shall be withheld until such statement is submitted.

14.6.2 Contractor shall agree that if materials containing asbestos are subsequently discovered at any future time to have been included in the construction done by the Contractor or any of its subcontractors or agents and were not specified in the design or required by the contract document, Contractor shall be liable for all costs related to the abatement of such asbestos and damages or claims against the City not withstanding any statute of limitations or other legal bar to any claim by the City.

14.7 EXTENT OF AGREEMENT

This Agreement (i) is solely for the benefit of the parties, (ii) represents the entire and integrated agreement between the parties and (iii) supersedes all prior negotiations, representations or agreements, either written or oral. In the event the terms of this Agreement contradict or conflict with any other agreement, written or oral, the terms of this Agreement shall govern.

14.8 NOTICES AND REQUESTS

Any notice or other communication required or permitted to be given under this Agreement shall be in writing and shall be deemed to have been duly given if (i) delivered to the party at the address set forth below, (ii) deposited in the U.S. Mail, registered or certified, return receipt requested, to the address set forth below, (iii) given to a recognized and reputable overnight delivery service, to the address set forth below or (iv) delivered by facsimile transmission to the number set forth below:

If to the City: Doug Bartosh, City Manager
City of Cottonwood
827 North Main Street
Cottonwood, AZ. 86326

If to the Contractor: Tyrel Eckroth
Schofield Civil Construction
23025 N. 15th Avenue, Suite 205
Phoenix, AZ 85027

or at such other address, and to the attention of such other person or officer, as any party may designate in writing by notice duly given pursuant to this Section. Notices shall be deemed received (i) when delivered to the party, (ii) three business days after being placed in the U.S. Mail, properly addressed, with sufficient postage, (iii) the following business day after being given to a recognized overnight delivery service, with the person giving the notice paying all required charges and instructing the delivery service to deliver on the following business day, or (iv) when received by facsimile transmission during the normal business hours of the recipient. If a copy of a notice is also given to a party's counsel or other recipient, the provisions above governing the date on which a notice is deemed to have been received by a party shall mean and refer to the date on which the party, and not its counsel or other recipient to which a copy of the notice may be sent, is deemed to have received the notice.

14.9 FAIR EMPLOYMENT PRACTICES CLAUSE

In connection with the performance of Work under the Contract, the Contractor agrees (as prescribed in A.R.S. Title 41, Chapter 9, Article 4 and except as may be allowed or required by other applicable law) not to discriminate against any employee or applicant for employment because of race, color, religion, or national origin. These provisions shall include, but not be limited to, the following: employment, upgrading, demotion or transfer, recruitment or recruitment advertising, layoff or termination, rates of pay for other forms of compensation, and selection or training, including apprenticeship. The Contractor agrees to post hereafter in conspicuous places, available for employees and applicants for employment, required legal notices or notes to be provided by the City or the Contractor, setting forth the provisions of the nondiscrimination clause. The Contractor further agrees to insert these provisions in all subcontracts hereunder, except subcontracts for standard commercial supplies of raw materials.

14.10 JOB OFFICE

Contractor will be provided a space at only one of the project locations for a job trailer for purposes of this project, if required.

14.11 LEGAL FEES AND COSTS

City will be entitled to recover its attorneys' fees, any costs of suit, any expert witness fees and the actual cost of any test or inspection incurred by City in connection with any effort undertaken by City to enforce any term of this Agreement against Contractor.

14.12 DISSEMINATION OF CONTRACT INFORMATION

Contractor shall not publish, permit to be published, or distribute for public consumption, any information, oral or written, concerning this Contract or work to be performed under this Contract, without the prior consent of the City.

14.13 NON-AVAILABILITY OF FUNDS

Every payment obligation of the City under this contract is conditioned upon the availability of funds appropriated or allocated for the payment of such obligation. If funds are not allocated and available for the continuance of this Contract, this Contract may be terminated by the City at the end of the period for which funds are available.

14.14 COMPLIANCE WITH IMMIGRATION LAWS

By entering the contract, Contractor warrants compliance with ARS subsection 41-4401, ARS subsection 23-214, the Federal Immigration and Nationality Act (FINA), and all other federal immigration laws and regulations. The Contractor shall obtain statements from its Subcontractors certifying compliance with the foregoing requirements and shall furnish the statements to the City upon request. These warranties shall remain in effect through the term of the contract.

The Contractor and its Subcontractors shall also maintain employment eligibility verification forms (I-9) as required by the U.S. Department of Labor’s Immigration and Control Act, for all employees performing work under this contract. I-9 Forms are available for download at USCIS.GOV.

Contractor also warrants and certifies by execution of this contract that Contractor and all Subcontractors have or shall, prior to construction, comply and maintain compliance with FINA and A.R.S. § 41-4401 and 23-214 which require compliance with federal immigration laws by State employers, State contractors and State subcontractors in accordance with the E-Verify Employee Eligibility Verification Program.

ARTICLE 15

EXISTING CONTRACT DOCUMENTS

The Contract Documents in existence at the time of execution of this Agreement are as follows:

a. Amendment No. 1

b. This Agreement;

c. The information provided by the City pursuant to Clause 4.1.2.a;

d. The City's Program provided pursuant to Subparagraph 4.1.1;

e. The City's RFQ for this project;

f. The Contractor's responses to the City's RFQ to the extent they do not conflict with the above;

g. Amendment No. 2 (unexecuted);

h. Other Amendments as may be executed by the parties.

In case of an inconsistency, conflict or ambiguity among the Contract Documents, the Documents shall govern in the order in which they are listed above.

IN WITNESS WHEREOF, the parties hereto have executed this agreement as of the date and year first written above.

CITY: CITY OF COTTONWOOD, ARIZONA

BY: _____

Diane Joens

Mayor

CONTRACTOR: Schofield Civil Construction

BY: _____

PRINT NAME: _____

PRINT TITLE: _____

STATE OF ARIZONA)
) SS.
COUNTY OF YAVAPAI)

This instrument was acknowledged before me this ___ day of _____, 2016

by _____ on behalf of _____.

_____
Notary Public in and for the State of Arizona

STATE OF ARIZONA)
) SS.
COUNTY OF YAVAPAI)

This instrument was acknowledged before me this ___ day of _____, 2016

by _____ on behalf of_____.

_____
Notary Public in and for the State of Arizona

AMENDMENT NO. 1

DATED SEPTEMBER 6th 2016

DESIGN AND PRECONSTRUCTION FEES UP TO GMP SUBMITTAL

I. Scope

A. The Project scope is generally as set forth in THE CITY OF COTTONWOOD REQUEST FOR QUALIFICATIONS For Design Build Services for UV Disinfection System Installation Project and as the parties may subsequently agree in writing.

B. The Project's scope includes, but is not limited to, site preparation and construction of all infrastructure needed.

C. The Project's scope includes all design services needed for the Project including, but not limited to, the requisite consultants such as architectural design, mechanical engineering, civil engineering, electrical engineering, and other such services reasonably necessary for this Project.

D. The scope also includes all construction activity necessary to complete the Project and includes, but is not limited to, permits, fees, inspections and testing, as required; however, the actual cost of the permits, fees, inspections and testing may be treated as reimbursables to save mark up and sales taxes. Budget money may be allocated to allow treatment of these necessary expenses outside of this contract at the City's sole discretion.

II. List of Assumptions

A. The Project will be delivered using two distinct amendments under this single agreement.

B. The first phase will be for design services and will include pre-construction services, including scheduling, cost estimating, schematic and design development, value engineering and constructability analysis, and construction documents. The first phase will have cost breakdown as follows:

1. Design services through 30%, 60% and 90% design development;

2. Design services for the balance;

3. Pre-construction services through 30%, 60% and 90% design development;

4. Pre-construction services for the balance up to proposal and possible establishment of the GMP.

C. The second phase will be for construction services and shall be performed pursuant to an agreed upon GMP or series of GMPs. The GMPs shall fully set forth all factors and assumptions relative to establishing the GMP.

D. If the City does not accept a GMP, the second phase for construction services, will not be initiated, or if a prior construction services under a phased or multiple GMP has been accepted, subsequent GMPs and the construction services therein will not be performed nor be considered a liability against the City.

E. All contingencies, cost savings and unused allowances shall be returned to the City for their use, or redirected for additional improvements as needed.

F. Additional assumptions that may arise must be agreed to by the parties in writing.

G. Amendment No. 1 and attachments thereto are supplementary to the contract between the parties and do not limit the contract between the parties. In the event of a conflict between Amendment No. 1 and attachments thereto and the contract between the parties, the contract between the parties shall control.

III. List of Clarifications

A. The following items clarify further Project scope, intent and scope of services:

1. The contract will be between the CITY OF COTTONWOOD AND SCHOFIELD CIVIL CONSTRUCTION.

2. SCHOFIELD CIVIL CONSTRUCTION will contract directly with KIMLEY-HORN AND ASSOCIATES INC., for all design services and will include all consultants, contract administration, and requisite errors and omissions insurance coverage naming TBD as insured with the CITY OF COTTONWOOD as additional insured;

3. SCHOFIELD CIVIL CONSTRUCTION's primary representative on this Project in all stages is Tyrel Eckroth.

4. This represents the foreseeable clarifications at this time. This list can be amended by mutual written agreement by the parties prior to incorporation into the final contract.

IV. Proposed Schedule

A. Substantial Completion shall occur no later than three (3) months after receipt of Notice to Proceed for the beginning of Construction, and Final Completion within 30 calendar days after Substantial Completion.

B. Phased delivery of a portion of the units shall be incorporated in to the final schedule as agreed to by the parties.

C. An initial proposed Project schedule is attached hereto, subject to modification by mutual written agreement of the parties.

V. Design and Pre-construction Services Fee

A. The following are the fees for the design and pre-construction services anticipated for this Project. These and all other fees, costs, and other expenditures relative to this Project shall be provided to the City, without request, pursuant to the open book policy of this agreement.

1. Design services through 30% design development $ TBD;
2. Design services through 60% design development $ TBD;
3. Design services through completion, including documents $ TBD;
4. Pre-construction services through GMP $ TBD;
5. Construction Fees at TBD% of the actual Cost of Work.

_____ TBD_____
Date

By: TBD_____

Its: TBD_____

_____ _____
Date

By:_____

Its:_____

AMENDMENT NO. 2

DATED September 6th, 2016

TO DESIGN/BUILD AGREEMENT BETWEEN CITY & CONTRACTOR

Pursuant to Paragraph 3.2 of the Agreement dated September 6th, 2016 between the City of Cottonwood, and the Contractor, Schofield Civil Construction, for the Project as previously described in the agreement and amendments, the City and the Contractor desire to establish a GMP for the Work. Therefore, the City and the Contractor agree as follows.

ARTICLE 1

GUARANTEED MAXIMUM PRICE:

The Contractor's GMP for the Work, including the Cost of the Work as defined in Article 8 of the Agreement and the Contractor's Fee as set forth in Paragraph 7.3 is

Two hundred ninety-eight thousand, nine hundred forty-six dollars ($298,946.00).

The GMP is for the performance of the Work in accordance with the documents listed below, which are part of the Agreement.

EXHIBIT 1 Request for Qualifications , including Addenda, if any,
Dated May 17th, 2016 , 21 pages.

EXHIBIT 2 Drawings and specifications, as annotated,
Dated August 19th, 2016 ,1 page.

EXHIBIT 3 A Guaranteed Maximum Price (GMP) proposal,
Dated August 19th, 2016 ,1 page.

EXHIBIT 4 Assumptions and clarifications,
Dated August 19th, 2016 ,3 pages.

EXHIBIT 5 Allowance items
Dated August 19th, 2016 ,1 page.

EXHIBIT 6 Alternate Prices
Dated August 19th, 2016 ,1 page.

EXHIBIT 7 A Construction Progress Schedule of Work
Dated August 19th, 2016 ,1 page.

EXHIBIT 8 Unit Prices
Dated August 19th, 2016 ,1 page.

ARTICLE 2

DATE OF SUBSTANTIAL COMPLETION:

The date of Substantial Completion of the Work is:_____

PLEASE NOTE: TIME IS OF THE ESSENCE. SEE SECTION 6.2.2 FOR EXPLANATION OF THE APPLICATION OF LIQUIDATED DAMAGES FOR EACH DAY AFTER THE DATE OF SUBSTANTIAL COMPLETION THAT THE WORK IS NOT SUBSTANTIALLY COMPLETE.

CONTRACTOR: _____

BY: _____

PRINT NAME: _____

PRINT TITLE: _____

CITY: _____

BY: _____

PRINT NAME: _____

PRINT TITLE: _____

August 19th, 2016

Schofield Civil Construction
23025 N. 15th Avenue Ste. 205
Phoenix, AZ 85027

Re: Procurement for UV Wastewater Disinfection System Installation

Dear Tyrel—Schofield Civil Construction:

We are pleased to inform that you were the highest ranked firm in our recent procurement for the City of Cottonwood UV Wastewater Disinfection System Installation (hereinafter Project). The next step in this process is for us to attempt to negotiate a contract with the highest ranked firm.

In order for us to proceed with this negotiation phase, please provide us with a proposal containing your understanding of the following elements:

1. Scope;
2. List of Assumptions;
3. List of Clarifications;
4. Proposed Schedule;
5. Design and Pre-construction Services Fee;
6. Construction Fee for Construction Phase Services; and any other matters that you believe should be included in Amendment No. 2 to the Agreement.

Please contact me with any questions.

Sincerely,

Jeff Cook, Purchasing/Contract Admin.

SCHOFIELD
CIVIL CONSTRUCTION

August 19, 2016

Roger Biggs
Utilities Manager
City of Cottonwood
111 N. Main Street
Cottonwood, AZ 86326

Project: Cottonwood Ultraviolet Wastewater Disinfection System Installation Project

Subject: GMP Proposal Summary Revision #2

Mr. Biggs,

The following items are provided to clarify cost within the GMP Proposal:

- Scope of Work
- Cost Summary
- Clarifications and Assumptions
- Inclusions / Exclusions
- Design Cost Proposal Summary (Kimley-Horn)
- Project Schedule

The total cost to perform the work is $298,946 as detailed in the Cost Summary, plus an additional $15,000 Owner allowance for unforeseen conditions equaling a grand total of **$313,946**. The following alternates are available to the City:

- Alternate #1 – Electrical Building Slab Credit ($1,650)
- Alternate #2 – Grating Supports $5,783

The anticipated construction duration is 88 calendar days as detailed in the Project Schedule.

We look forward to working with you on this Project. If you have questions or further assistance please do not hesitate to contact us.

Sincerely,

SCHOFIELD CIVIL CONSTRUCTION LLC

Tyrel Eckroth

Tyrel Eckroth

SCHOFIELD
CIVIL CONSTRUCTION

SCOPE OF WORK

PART 1 – General

Modify existing UV basin for new UV disinfection equipment installation. The work covered under this contract will be performed at the City of Cottonwood Treatment Facility located at 1480 W. Mingus Avenue.

PART 2 – Design Services.

- Provide plans and specifications for modifying existing UV basin.
- Permiting for ADEQ.
- Equipment vendor coordination.
- Construction management services.

PART 3 – Work of this Contract

The work to be performed under this contract includes furnishing and installing:

- 1.5 MGD temporary bypass pumping system with full pump redundancy.
- Unwater channel 2 & 3.
- Clean channel 2 & 3 of debris and trash.
- Perform existing concrete assessment. Utilize allowance for repair and /or coat delaminated concrete if required.
- New reinforced concrete wall in channel 2.
- Add 2' wall height atop existing concrete wall.
- New concrete floor for Wedeco UV installation.
- Cut and/or core existing concrete wall to re-route flow through UV basin.
- Install owner provided Wedeco UV System.
- New 100 amp feeder breaker to go into existing MCC.
- 100 amp feeder including excavation and backfill, to new 100 amp 480 volt distribution panel located in new electrical building.
- Stepdown MPZ for new 120 volt circuits, lights and receptacles in new electrical building.
- All required interconnecting conduit and cabling.
- UV electrical components installation.
- Integrate Wedeco UV System to existing SCADA system.
- Remove existing Trojan UV system.
- Abandon channel 1 with concrete fill.
- New concrete slab for electrical building.
- Pre-manufactured steel electrical building with wall mount 3 ton AC unit.
- Assist with channel startup, commissioning and training.
- Grating supports at new concrete walls.

Estimate Recap Report

Project Information

Estimate:	AZ16-020 - Cottonwood UV Installation	**Bid Date:**	08/15/2016
Project:	-	**Review Date:**	-
Estimator In Charge:	-	**Job Duration:**	2 months
Owner:	-	**State:**	-
Engineer:	-	**Estimate Type:**	-
Related Estimate:	-		

Estimate Summary

	On Bid Quantities	%
Direct Cost	240,724	80.52%
Indirect Cost	0	0.00%
Addons	18,957	6.34%
Bond	3,157	1.06%
Pass Through Cost	0	0.00%
Direct Markup	36,109	12.08%
Indirect Markup	0	0.00%
Markup Addons	0	0.00%
+ / - Adjustments	0	
Pass Through Adjustment	0	
Unbalancing Difference	0	0.00%
Rounding Difference	0	
Desired Bid	0.00	
Final Bid Total	298,946.81	100.00%
Final Markup (% Based on Cost)	36,109	13.74%

Activity Unit Price Summary

Biditem Activity	Description	Quantity	Unit	Calendar WC	Hrs/Shift		Labor	Perm Material	Constr Matl/Exp	Equipment Ownership	Equipment Operation	Sub-Contract	Total
*** 10	**Design Services**					Takeoff:		1.00 LS		Bid:	1.00 LS		
10.10	Kickoff Meeting	1.00	DY	AZ5606	508	8.00	960			27	15		1,002
10.20	Design Review	1.00	MO	AZ5606	508	8.00	6,397			360	200		6,957
10.30	Equipment Verification / Shake	1.00	LS	AZ6318	510	10.00	638			236	60		934
10.40	SUB - Kimley Horn Design Servi	1.00	LS	AZ6318	510	10.00						46,195	46,195
10.50	SUB - Ludvik Design Services	1.00	LS	AZ6318	510	10.00						1	1
	**********Biditem/Category 10 **********						7,995			623	275	46,196	55,089
	Mh: 108.00 Mh/Un: 108.0000						7,994.85			623.00	275.00	46,196.00	55,088.85
*** 20	**General Conditions**					Takeoff:		1.00 LS		Bid:	1.00 LS		
20.10	Staff	6.00	WK	AZ5606	508	8.00	28,787			1,620	900		31,307
20.20	Small Tools / Safety Supplies	6.00	WK	AZ6318	510	10.00			720		1,200		1,920
20.30	Equipment Mobilization	1.00	LS	AZ6318	510	10.00			1,000				1,000
20.40	Site Facilities	6.00	WK	AZ6318	510	10.00			1,950				1,950
	**********Biditem/Category 20 **********						28,787		3,670	1,620	2,100		36,177
	Mh: 360.00 Mh/Un: 360.0000						28,787.40		3,670.00	1,620.00	2,100.00		36,177.40
*** 30	**Bypass**					Takeoff:		1.00 LS		Bid:	1.00 LS		
30.10	Bypass Equipment	2.00	MO	AZ6318	510	10.00			1,320	8,700			10,020
30.20	Install Bypass	1.00	LS	AZ6318	510	10.00	868			224	72		1,164
30.30	Remove Bypass	1.00	LS	AZ6318	510	10.00	868			224	72		1,164
30.40	Install / Remove Bulkheads	4.00	EA	AZ6318	510	10.00	2,169	3,000		560	180		5,909
	**********Biditem/Category 30 **********						3,904	3,000	1,320	9,708	324		18,256
	Mh: 108.00 Mh/Un: 108.0000						3,904.09	3,000.00	1,320.00	9,708.00	324.00		18,256.09
*** 40	**Unwatering / Cleaning**					Takeoff:		1.00 LS		Bid:	1.00 LS		
40.10	Unwater Basin	1.00	LS	AZ6318	510	10.00	256			80	64		400
40.20	Clean Basin	1.00	LS	AZ6318	510	10.00	434			12	216		662
	**********Biditem/Category 40 **********						690			92	280		1,062
	Mh: 20.00 Mh/Un: 20.0000						689.63			92.00	280.00		1,061.63
*** 60	**Concrete**					Takeoff:		1.00 LS		Bid:	1.00 LS		
60.10	F/S Center Wall	912.00	SF	AZ6318	510	10.00	5,749	200	2,928	1,120	360		10,357
60.15	P/F Center Wall	11.00	CY	AZ6318	510	10.00	794	1,820		24	932		3,570
60.20	Center Wall Reinforcement	1,060.00	LB	AZ6318	510	10.00	868	816		224	72		1,980
60.22	Center Wall - Drill / Epoxy	70.00	EA	AZ6318	510	10.00	383	1,140					1,523
60.30	F/S 2' Wall Extension	144.00	SF	AZ6318	510	10.00	1,150		576	224	72		2,022
60.35	P/F 2' Wall Extension	1.50	CY	AZ6318	510	10.00	308	280		6	308		902
60.40	Exten. Wall - Drill / Epoxy / Rein	54.00	EA	AZ6318	510	10.00	438	469					907
60.50	Channel Fill - CLSM	9.00	CY	AZ6318	510	10.00	251	750		6	608		1,615
60.60	F/S Channel Floor	35.00	SF	AZ6318	510	10.00	110		105				215
60.65	P/F Channel Floor	3.00	CY	AZ6318	510	10.00	595	420		18	24		1,057

Activity Unit Price Summary

Biditem Activity	Description	Quantity	Unit	Calendar WC	Hrs/Shift		Labor	Perm Material	Constr Matl/Exp	Equipment Ownership	Equipment Operation	Sub-Contract	Total
60.70	Channel Floor - Drill / Epoxy / R	65.00	EA	AZ6318	510	10.00	438	1,600					2,038
60.90	Core Holes	2.00	EA	AZ6318	510	10.00						1,800	1,800
60.95	Core Hole Rebar Repair	2.00	EA	AZ6318	510	10.00	512	200					712
	**********Biditem/Category 60 **********						11,594	7,695	3,609	1,622	2,376	1,800	28,697
	Mh: 342.00 Mh/Un: 342.0000						11,594.33	7,695.20	3,609.00	1,622.00	2,376.00	1,800.00	28,696.53
*** 70	**Install Wedeco System**					Takeoff:		1.00 LS		Bid:	1.00 LS		
70.10	Set Template	7.00	EA	AZ6318	510	10.00	1,518	350	70	217	91		2,246
70.15	Drill Holes for Installation Parts	7.00	EA	AZ6318	510	10.00	2,711		560	388	163		3,821
70.20	Install Parts to Channel Wall	7.00	EA	AZ6318	510	10.00	1,518			392	126		2,036
70.25	Module Frame Installation	7.00	EA	AZ6318	510	10.00	1,518			392	126		2,036
70.30	Install Centering Angle	7.00	EA	AZ6318	510	10.00	759			196	63		1,018
70.35	Install Light Shield	7.00	EA	AZ6318	510	10.00	1,518			392	126		2,036
70.50	Install Level Probe	1.00	EA	AZ6318	510	10.00	128						128
	**********Biditem/Category 70 **********						9,671	350	630	1,977	695		13,322
	Mh: 268.00 Mh/Un: 268.0000						9,671.18	350.00	630.00	1,976.50	694.50		13,322.18
*** 80	**Testing / Startup**					Takeoff:		1.00 LS		Bid:	1.00 LS		
80.10	Testing & Startup	1.00	WK	AZ6318	510	10.00	3,296			520	480		4,296
	**********Biditem/Category 80 **********						3,296			520	480		4,296
	Mh: 80.00 Mh/Un: 80.0000						3,295.53			520.00	480.00		4,295.53
*** 90	**Remove / Abandon Trojan System**					Takeoff:		1.00 LS		Bid:	1.00 LS		
90.10	Remove Trojan System	1.00	LS	AZ6318	510	10.00	868			224	72		1,164
90.20	Concrete Fill Trojan Channel	9.00	CY	AZ6318	510	10.00	924	1,540		18	24		2,506
	**********Biditem/Category 90 **********						1,791	1,540		242	96		3,669
	Mh: 54.00 Mh/Un: 54.0000						1,791.48	1,540.00		242.00	96.00		3,669.48
*** 110	**Electrical Subcontractor**					Takeoff:		1.00 LS		Bid:	1.00 LS		
110.10	SUB - Electrical	1.00	LS	AZ6318	510	10.00						72,000	72,000
	**********Biditem/Category 110 **********											72,000	72,000
	Mh: Mh/Un:											72,000.00	72,000.00
*** 120	**Electrical Building**					Takeoff:		1.00 LS		Bid:	1.00 LS		
120.10	Prep Subgrade	96.00	SF	AZ6318	510	10.00	212			50	10		272
120.20	F/S Electrical Slab	44.00	LF	AZ6318	510	10.00	325		132	9	12		478
120.25	Electrical Slab Rebar	290.00	LB	AZ6318	510	10.00	217	223		6	8		454
120.30	P/F Electrical Slab	2.50	CY	AZ6318	510	10.00	397			12	16		425
120.35	Assemble PreFab Building	1.00	EA	AZ6318	510	10.00	1,735	4,200		448	144		6,527
	**********Biditem/Category 120 **********						2,886	4,423	132	525	190		8,156

Activity Unit Price Summary

Biditem Activity	Description		Quantity	Unit	Calendar WC	Hrs/Shift	Labor	Perm Material	Constr Matl/Exp	Equipment Ownership	Equipment Operation	Sub-Contract	Total
Mh:	81.00	Mh/Un:	81.0000				2,885.95	4,423.30	132.00	525.00	190.00		8,156.25
Mh:	**1,421.00**	*****REPORT TOTALS*****					**70,614**	**17,009**	**9,361**	**16,929**	**6,816**	**119,996**	**240,724**

N = Activity not adjusted to bid quantity

SCHOFIELD
CIVIL CONSTRUCTION

CLARIFICATIONS AND ASSUMPTIONS

1. The electric bypass pump systems assumes use of power from existing MCC building. System will utilize floats and alarms for notification and will not have continuous pump watch. Bypass system includes 100% pump redundancy.
2. Electrical building includes metal building kit from Absolute Steel. Building will include a pedestrian door, R-11 insulation, light fixture and *23000 BTU window air conditioner (cooling & heating, LW2416HR)*. New concrete slab for electrical building to be located near existing chlorine enclosure adjacent to UV basin. All existing equipment in chlorine enclosure to remain as is. *If City removes/reinstals existing equipment in FRP building in new building and SCC resuses existing slab for new electrical building a deduction of ($1,650) will be given to City Alternate #1 – Electrical Building Slab Credit.*
3. Trojan UV equipment assumed to remain in operation until new Wedeco system is tested and operational.
4. SCADA and integration to be performed by Alliance Service and Control Specialists. Schofield has included coordination with ASCS.
5. New grating for UV basin to be provided under future contract. *Angle frames and support system for new grating will be performed if City elects to perform Alternate #2 – Grating Supports.*
6. *No allowance for concrete channel repairs in UV basin is included.*
7. *Schofield Civil Construction is including Professional Liability insurance.*
8. *Trenching, bedding (if other than native material) and backfill for electrical conduits from MCC building to new electrical building to be performed by City.*

Inclusions / Exclusions

Description	Included	Excluded	Notes
Permits			
Permit Fees		X	
Building Permits		X	
Arizona Pollutant Discharge Elimination System (AZPDES) Permit		X	
Arizona Department of Transportation Permit		X	
U.S. Army Corps of Engineers 404 Permit		X	
Insurance			
Builders Risk Insurance		X	
Pollution Insurance	X		$1,000,000 limit
Professional Liability Insurance	X		
General Liability Insurance	X		$1,000,000 occur. / $2,000,000 agg.
Contract Matters			
AZ Transaction Privilege Tax	X		
Public Information		X	
Site Management			
Mobilization / Demobilization	X		One each way
Storm Water Pollution Prevention Plan (SWPPP)		X	
Construction Water		X	Utilize plant water
Odor Control		X	
Noise Control		X	
Field Office	X		Mobile trailer
Site Security		X	
Temporary Fence		X	
Offsite Yard / Storage		X	
Sanitary Facilities	X		
Use of Existing Utilities - Power / Water	X		Power for bypass system
Survey	X		
Maintenance of Plant Operations (MOPO)	X		
Operation of Existing Valves / Equipment		X	
Schedule			
Overtime - Schofield	X		5 - 10hr shifts
Overtime - Inspection / Engineer / Owner		X	
Multiple Shifts		X	
Existing Conditions			
Hazardous Waste Handling / Disposal		X	
Contaminated Waste Handling / Disposal		X	
Clearing / Grubbing		X	
Remove / Relocate Existing Utilities		X	
Damage to Unknown / Unmarked Utilities		X	
Remove / Replace Asbestos Cement Pipe		X	
Utility Conflicts		X	

Inclusions / Exclusions

Description	Included	Excluded	Notes
Existing Conditions			
Site Clean Up	X		
Pavement Restoration		X	
Landscaping		X	

August 15, 2016

Mr. Tyrel Eckroth
Schofield Civil Construction
23025 N. 15th Avenue, Ste. 205
Phoenix, Arizona 85027

Re: Professional Services Agreement – Cottonwood WWTP UV Disinfection Project

Dear Mr. Eckroth:

Kimley-Horn and Associates, Inc. ("Kimley-Horn" or "Consultant") is pleased to submit this letter agreement (the "Agreement") to Schofield Civil Construction ("Client") for providing design and post-design phase services related to the UV Disinfection Improvement Project for the City of Cottonwood Wastewater Treatment Plant (WWTP).

PROJECT UNDERSTANDING

The City of Cottonwood has selected our team for the design and construction for the installation of a new Wedeco Duron Ultraviolet (UV) Wastewater Disinfection System for the Cottonwood WWTP. The original request included the engineering analysis, design, site preparation, and installation of the new UV system, as well as related support systems.

The purpose of this project is prepare final design plans for the detailed improvements, which includes close coordination with the UV equipment manufacturer, coordination and design support for electrical and instrumentation improvement, and related onsite field assistance during installation and during startup and testing phases.

SCOPE OF SERVICES

Kimley-Horn will provide the services specifically set forth below.

TASK 1 – FINAL DESIGN

Kimley-Horn will provide design for the installation of the new Wedeco Duron UV system at the existing Cottonwood WWTP. Design phase services include tasks related to overall installation of the new UV system, to include the preparation of design drawings encompassing civil/mechanical installation, new electrical service to support the City-provided equipment, and related structural detail required to modify the existing facility.

- Project Administration. Kimley-Horn will provide representation at project related meetings to assist in the coordination of the installation of the new UV equipment. This will include budget for progress meetings and ongoing coordination. Kimley-Horn will provide representation at submittal review meetings to coordinate with the

City of Cottonwood and with the Client after 60% and 90% design phases. In addition, Kimley-Horn will provide formal written response to items captured during review meetings and/or City of Cottonwood review periods.

- Field Work and Design Criteria. Kimley-Horn will review previously completed work related to the design and selection of the new Wedeco Duron UV system. In addition, review of ADEQ permitting requirements, existing as-built drawing review, and other existing available documentation will be reviewed as part of our pre-design phase of this effort.
- Final Design. Kimley-Horn will prepare final design drawings to include civil/mechanical, electrical, structural, instrumentation, and associated improvements as outlined in the original request from the City of Cottonwood. Design drawings will be developed in cooperation with the Client to ensure constructability, phasing, and site requirements are incorporated into the final documents. Deliverables for each design phase shall include one (1) electronic pdf copy and three (3) sets of full size plans for City of Cottonwood review, comment, and approval. Design phases are defined as follows:
    - 60% Submittal
    - 90% Submittal
    - Final Submittal
    - As-Constructed plans (as required for City of Cottonwood and ADEQ)
    - Operations and Maintenance Manual (after commissioning and testing)

TASK 2 – CONSTRUCTION PHASE SERVICES

Kimley-Horn will provide on-site assistance during installation, startup, and commissioning for the new Wedeco Duron UV system. Site visits will be coordinated with the Client and effort is anticipated to be directly related to minimizing operations disruptions during construction and for documentation of startup and site testing requirements, which will be needed for submittal to ADEQ.

Services Not Included and Assumptions

Any other services, including but not limited to the following, are not included in this Agreement but can be added through a contract modification or by a cost plus basis as outlined in Additional Services below:

- Design for additional enclosures/buildings
- Additional submittals
- Alternative analyses
- Data collection
- Survey

Additional Services

Any services not specifically provided for in the above scope will be billed as additional services and performed at our then current hourly rates. Additional services we can provide include, but are not limited to, the following: preliminary design, final design of proposed system, survey, value engineering, booster and tank design, well design, electrical engineering, and roadway reconstruction.

Information Provided By Client

We shall be entitled to rely on the completeness and accuracy of all information provided by the Client or the Client's consultants or representatives. The Client shall provide all information requested by Kimley-Horn during the project, including but not limited to the following: GIS information on existing site infrastructure, record drawings, and history of site performance. Some of this information has already been provided to Kimley-Horn.

Schedule

We will provide our services as expeditiously as practicable with the goal of meeting the following schedule:

- Submit final plans within four weeks of NTP.
- City of Cottonwood review of pre-final plans within five weeks of NTP.
- Resolve all review comments within six weeks of NTP.
- Prepare final plans, specifications, and opinion of probable construction cost within eight weeks of NTP.

Fee and Expenses

Kimley-Horn will perform the services in Task 1 and Task 2 for the not to exceed labor fee below. Individual task amounts are informational only. In addition to the lump sum labor fee, direct reimbursable expenses such as express delivery services, fees, air travel, lab work, and other direct expenses will be billed at 1.10 times cost. All permitting, application, and similar project fees will be paid directly by the Client; should the Client request Kimley-Horn to advance any such project fees on the Client's behalf, a separate invoice for such fees, with a ten percent (10%) markup, will be immediately issued to and paid by the Client.

Task 1	Final Design[1]	$41,520
Task 2	Construction Phase Services	$3,200
Estimated Expenses		$1,475
Total Not-to-Exceed Labor Fee		$46,195

[1] *Includes Pineview Consulting fee*

Professional fees will be invoiced monthly based upon the overall percentage of services performed. Reimbursable expenses will be invoiced based upon expenses incurred. Payment will be due within 25 days of your receipt of the invoice and should include the invoice number and Kimley-Horn project number.

Closure

In addition to the matters set forth herein, our Agreement shall include and be subject to, and only to, the attached Standard Provisions, which are incorporated by reference. As used in the Standard Provisions, "Consultant" shall refer to Kimley-Horn and Associates, Inc., and "Client" shall refer to Fort Mojave Tribal Utilities Authority.

Kimley-Horn, in an effort to expedite invoices and reduce paper waste, submits invoices via email in an Adobe PDF format. We can also provide a paper copy via regular mail if requested. Please include the invoice number and Kimley-Horn project number with all payments. Please provide the following information:

____ Please email all invoices to _____

____ Please copy _____

If you concur in all the foregoing and wish to direct us to proceed with the services, please have authorized persons execute both copies of this Agreement in the spaces provided below, retain one copy, and return the other to us. We will commence services only after we have received a fully-executed agreement. Fees and times stated in this Agreement are valid for sixty (60) days after the date of this letter.

To ensure proper set up of your projects so that we can get started, please complete and return with the signed copy of this Agreement the attached Request for Information. Failure to supply this information could result in delay in starting work on your project.

We appreciate the opportunity to provide these services to you. Please contact me if you have any questions.

Very truly yours,

KIMLEY-HORN AND ASSOCIATES, INC.

By: Ray P. Montoya, PE
Project Manager

Client Authorized Signature:

_____

Client Printed Name:

_____

Client Title:

_____

Client's Federal Tax ID: _____

Client's Street Address: _____

_____

Attachment – Request for Information
Attachment – Standard Provisions

Request for Information

Please return this information with your signed contract; failure to provide this information could result in delay in starting your project

Client Identification

Full, Legal Name of Client						
Mailing Address for Invoices						
Contact for Billing Inquiries						
Contact's Phone and e-mail						
Client is (check one)	Owner		Agent for Owner		Unrelated to Owner	

Property Identification

	Parcel 1	Parcel 2	Parcel 3	Parcel 4
Street Address				
County in which Property is Located				
Tax Assessor's Number(s)				

Property Owner Identification

	Owner 1	Owner 2	Owner 3	Owner 4
Owner(s) Name				
Owner(s) Mailing Address				
Owner's Phone No.				
Owner of Which Parcel #?				

Project Funding Identification – List Funding Sources for the Project

Attach additional sheets if there are more than 4 parcels or more than 4 owners

KIMLEY-HORN AND ASSOCIATES, INC.

STANDARD PROVISIONS

(1) **Consultant's Scope of Services and Additional Services.** The Consultant's undertaking to perform professional services extends only to the services specifically described in this Agreement. However, if requested by the Client and agreed to by the Consultant, the Consultant will perform Additional Services, which shall be governed by these provisions. Unless otherwise agreed to in writing, the Client shall pay the Consultant for any Additional Services an amount based upon the Consultant's then-current hourly rates plus an amount to cover certain direct expenses including telecommunications, in-house reproduction, postage, supplies, project related computer time, and local mileage. Other direct expenses will be billed at 1.10 times cost.

(2) **Client's Responsibilities.** In addition to other responsibilities described herein or imposed by law, the Client shall:
a) Designate in writing a person to act as its representative with respect to this Agreement, such person having complete authority to transmit instructions, receive information, and make or interpret the Client's decisions.
(b) Provide all information and criteria as to the Client's requirements, objectives, and expectations for the project including all numerical criteria that are to be met and all standards of development, design, or construction.
(c) Provide to the Consultant all previous studies, plans, or other documents pertaining to the project and all new data reasonably necessary in the Consultant's opinion, such as site survey and engineering data, environmental impact assessments or statements, upon all of which the Consultant may rely.
(d) Arrange for access to the site and other private or public property as required for the Consultant to provide its services.
(e) Review all documents or oral reports presented by the Consultant and render in writing decisions pertaining thereto within a reasonable time so as not to delay the services of the Consultant.
(f) Furnish approvals and permits from governmental authorities having jurisdiction over the project and approvals and consents from other parties as may be necessary for completion of the Consultant's services.
(g) Cause to be provided such independent accounting, legal, insurance, cost estimating and overall feasibility services as the Client may require.
(h) Give prompt written notice to the Consultant whenever the Client becomes aware of any development that affects the scope, timing, or payment of the Consultant's services or any defect or noncompliance in any aspect of the project.
(i) Bear all costs incidental to the responsibilities of the Client.

(3) **Period of Services.** Unless otherwise stated herein, the Consultant will begin work timely after receipt of a properly executed copy of this Agreement and any required retainer amount. This Agreement is made in anticipation of conditions permitting continuous and orderly progress through completion of the services. Times for performance shall be extended as necessary for delays or suspensions due to circumstances that the Consultant does not control. If such delay or suspension extends for more than six months (cumulatively), Consultant's compensation shall be renegotiated.

(4) Method of Payment. Compensation shall be paid to the Consultant in accordance with the following provisions:
(a) Invoices will be submitted periodically for services performed and expenses incurred. Payment of each invoice will be due within 25 days of receipt. The Client shall also pay any applicable sales tax. All retainers will be held by the Consultant for the duration of the project and applied against the final invoice. Interest will be added to accounts not paid within 25 days at the maximum rate allowed by law. If the Client fails to make any payment due to the Consultant under this or any other agreement within 30 days after the Consultant's transmittal of its invoice, the Consultant may, after giving notice to the Client, suspend services and withhold deliverables until all amounts due are paid in full and may commence proceedings, including filing liens, to secure its right to payment under this Agreement.
(b) If the Client relies on payment or proceeds from a third party to pay Consultant and Client does not pay Consultant's invoice within 60 days of receipt, Consultant may communicate directly with such third party to secure payment.
(c) If the Client objects to an invoice, it must advise the Consultant in writing giving its reasons within 14 days of receipt of the invoice or the Client's objections will be waived, and the invoice shall conclusively be deemed due and owing. If the Client objects to only a portion of the invoice, payment for all other portions remains due within 25 days of receipt.
(d) If the Consultant initiates legal proceedings to collect payment, it may recover, in addition to all amounts due, its reasonable attorneys' fees, reasonable experts' fees, and other expenses related to the proceedings. Such expenses shall include the cost, at the Consultant's normal hourly billing rates, of the time devoted to such proceedings by its employees.
(e) The Client agrees that the payment to the Consultant is not subject to any contingency or condition. The Consultant may negotiate payment of any check tendered by the Client, even if the words "in full satisfaction" or words intended to have similar effect appear on the check without such negotiation being an accord and satisfaction of any disputed debt and without prejudicing any right of the Consultant to collect additional amounts from the Client.

(5) **Use of Documents.** All documents, including but not limited to drawings, specifications, reports, and data or programs stored electronically, prepared by the Consultant are related exclusively to the services described in this Agreement, and may be used only if the Client has satisfied all of its obligations under this Agreement. They are not

intended or represented to be suitable for use, partial use or reuse by the Client or others on extensions of this project or on any other project. Any modifications made by the Client to any of the Consultant's documents, or any use, partial use or reuse of the documents without written authorization or adaptation by the Consultant will be at the Client's sole risk and without liability to the Consultant, and the Client shall indemnify, defend and hold the Consultant harmless from all claims, damages, losses and expenses, including but not limited to attorneys' fees, resulting therefrom. The Consultant's electronic files and source code developed in the development of application code remain the property of the Consultant and shall be provided to the Client only if expressly provided for in this Agreement. Any electronic files not containing an electronic seal are provided only for the convenience of the Client, and use of them is at the Client's sole risk. In the case of any defects in the electronic files or any discrepancies between them and the hardcopy of the documents prepared by the Consultant, the hardcopy shall govern. Because data stored in electronic media format can deteriorate or be modified without the Consultant's authorization, the Client has 60 days to perform acceptance tests, after which it shall be deemed to have accepted the data.

(6) **Opinions of Cost.** Because the Consultant does not control the cost of labor, materials, equipment or services furnished by others, methods of determining prices, or competitive bidding or market conditions, any opinions rendered as to costs, including but not limited to opinions as to the costs of construction and materials, shall be made on the basis of its experience and represent its judgment as an experienced and qualified professional, familiar with the industry. The Consultant cannot and does not guarantee that proposals, bids or actual costs will not vary from its opinions of cost. If the Client wishes greater assurance as to the amount of any cost, it shall employ an independent cost estimator. Consultant's services required to bring costs within any limitation established by the Client will be paid for as Additional Services.

(7) **Termination.** The obligation to provide further services under this Agreement may be terminated by either party upon seven days' written notice in the event of substantial failure by the other party to perform in accordance with the terms hereof through no fault of the terminating party, or upon thirty days' written notice for the convenience of the terminating party. If any change occurs in the ownership of the Client, the Consultant shall have the right to immediately terminate this Agreement. In the event of any termination, the Consultant shall be paid for all services rendered and expenses incurred to the effective date of termination, and other reasonable expenses incurred by the Consultant as a result of such termination. If the Consultant's compensation is a fixed fee, the amount payable for services will be a proportional amount of the total fee based on the ratio of the amount of the services performed, as reasonably determined by the Consultant, to the total amount of services which were to have been performed.

(8) **Insurance.** The Consultant carries Workers' Compensation insurance, professional liability insurance, and general liability insurance. If the Client directs the Consultant to obtain increased insurance coverage, the Consultant will take out such additional insurance, if obtainable, at the Client's expense.

(9) **Standard of Care.** The standard of care applicable to Consultant's services will be the degree of care and skill ordinarily exercised by consultants performing the same or similar services in the same locality at the time the services are provided. No warranty, express or implied, is made or intended by the Consultant's undertaking herein or its performance of services, and it is agreed that the Consultant is not a fiduciary with respect to the Client.

(10) **LIMITATION OF LIABILITY.** In recognition of the relative risks and benefits of the Project to the Client and the Consultant, the risks have been allocated such that the Client agrees**,** to the fullest extent of the law, and notwithstanding any other provisions of this Agreement or the existence of applicable insurance coverage, that the total liability, in the aggregate, of the Consultant and the Consultant's officers, directors, employees, agents, and subconsultants to the Client or to anyone claiming by, through or under the Client, for any and all claims, losses, costs or damages whatsoever arising out of, resulting from or in any way related to the services under this Agreement from any cause or causes, including but not limited to, the negligence, professional errors or omissions, strict liability or breach of contract or any warranty, express or implied, of the Consultant or the Consultant's officers, directors, employees, agents, and subconsultants, shall not exceed twice the total compensation received by the Consultant under this Agreement or $50,000, whichever is greater. Higher limits of liability may be negotiated for additional fee. Under no circumstances shall the Consultant be liable for extra costs or other consequences due to changed conditions, or for costs related to the failure of contractors to perform work in accordance with the plans and specifications. This Section 10 is intended solely to limit the remedies available to the Client or those claiming by or through the Client, and nothing in this Section 10 shall require the Client to indemnify the Consultant.

(11) **Mutual Waiver of Consequential Damages.** In no event shall either party be liable to the other for any consequential, incidental, punitive, or indirect damages including but not limited to loss of income or loss of profits.

(12) **Certifications.** The Consultant shall not be required to execute certifications or third-party reliance letters that are inaccurate, that relate to facts of which the Consultant does not have actual knowledge, or that would cause the Consultant to violate applicable rules of professional responsibility.

(13) **Dispute Resolution.** All claims by the Client arising out of this Agreement or its breach shall be submitted first to mediation in accordance with the Construction Industry Mediation Procedures of the American Arbitration Association as a condition precedent to litigation. Any mediation or civil action by Client must be commenced within one year of the accrual of the cause of action asserted but in no event later than allowed by applicable statutes.

(14) **Hazardous Substances and Conditions.** In no event shall Consultant be a custodian, transporter, handler, arranger, contractor, or remediator with respect to hazardous substances and conditions. Consultant's services will be limited to professional analysis, recommendations, and reporting, including, when agreed to, plans and specifications for isolation, removal, or remediation. The Consultant shall notify the Client of hazardous substances or conditions not contemplated in the scope of services of which the Consultant actually becomes aware. Upon such notice by the Consultant, the Consultant may stop affected portions of its services until the hazardous substance or condition is eliminated.

(15) **Construction Phase Services.**
(a) If the Consultant's services include the preparation of documents to be used for construction and the Consultant is not retained to make periodic site visits, the Client assumes all responsibility for interpretation of the documents and for construction observation, and the Client waives any claims against the Consultant in any way connected thereto.
(b) If the Consultant provides construction phase services, the Consultant shall have no responsibility for any contractor's means, methods, techniques, equipment choice and usage, sequence, schedule, safety programs, or safety practices, nor shall Consultant have any authority or responsibility to stop or direct the work of any contractor. The Consultant's visits will be for the purpose of endeavoring to provide the Client a greater degree of confidence that the completed work of its contractors will generally conform to the construction documents prepared by the Consultant. Consultant neither guarantees the performance of contractors, nor assumes responsibility for any contractor’s failure to perform its work in accordance with the contract documents.
(c) The Consultant is not responsible for any duties assigned to the design professional in the construction contract that are not expressly provided for in this Agreement. The Client agrees that each contract with any contractor shall state that the contractor shall be solely responsible for job site safety and for its means and methods; that the contractor shall indemnify the Client and the Consultant for all claims and liability arising out of job site accidents; and that the Client and the Consultant shall be made additional insureds under the contractor’s general liability insurance policy.

(16) **No Third-Party Beneficiaries; Assignment and Subcontracting.** This Agreement gives no rights or benefits to anyone other than the Client and the Consultant, and all duties and responsibilities undertaken pursuant to this Agreement will be for the sole benefit of the Client and the Consultant. The Client shall not assign or transfer any rights under or interest in this Agreement, or any claim arising out of the performance of services by Consultant, without the written consent of the Consultant. The Consultant reserves the right to augment its staff with subconsultants as it deems appropriate due to project logistics, schedules, or market conditions. If the Consultant exercises this right, the Consultant will maintain the agreed-upon billing rates for services identified in the contract, regardless of whether the services are provided by in-house employees, contract employees, or independent subconsultants.

(17) **Confidentiality.** The Client consents to the use and dissemination by the Consultant of photographs of the project and to the use by the Consultant of facts, data and information obtained by the Consultant in the performance of its services. If, however, any facts, data or information are specifically identified in writing by the Client as confidential, the Consultant shall use reasonable care to maintain the confidentiality of that material.

(18) **Miscellaneous Provisions.** This Agreement is to be governed by the law of the State in which the Project is located. This Agreement contains the entire and fully integrated agreement between the parties and supersedes all prior and contemporaneous negotiations, representations, agreements or understandings, whether written or oral. Except as provided in Section 1, this Agreement can be supplemented or amended only by a written document executed by both parties. Provided, however, that any conflicting or additional terms on any purchase order issued by the Client shall be void and are hereby expressly rejected by the Consultant. Any provision in this Agreement that is unenforceable shall be ineffective to the extent of such unenforceability without invalidating the remaining provisions. The non-enforcement of any provision by either party shall not constitute a waiver of that provision nor shall it affect the enforceability of that provision or of the remainder of this Agreement.

Cottonwood WWTP - UV Disinfection Improvements
REV 1 - 16AUG2016

(Costs Rounded to the Nearest $1.00)

ESTIMATED DIRECT LABOR

Classification	Estimated Man-Hours	Hourly Rate*	Labor Costs
Principal	0	$220.00	$ -
Senior Project Manager	34	$200.00	$ 6,800
Senior Engineer	56	$185.00	$ 10,360
Senior Professional	0	$180.00	$ -
Project Engineer	104	$150.00	$ 15,600
Designer	80	$105.00	$ 8,400
Admin Support I	0	$110.00	$ -
AdminSupport II	8	$70.00	$ 560
Total Man-Hours	282	Total Labor Costs	$ 41,720

[* Includes overhead at 191.53% of labor and profit at 10% of labor and overhead.]

ESTIMATED DIRECT EXPENSES
(See Exhibit 3)

Item	Cost
Mileage	$ 473
Reproductions	$ 1,001
Total Direct Expenses	**$ 1,475**

ESTIMATED OUTSIDE SERVICES AND CONSULTANTS

Pineview Consulting (Ken Knickerbocker)	$ 3,000
Total Estimated Outside Services	**$ 3,000**

Direct Labor	$ 41,720
Total Direct Expenses	$ 1,475
Total Estimated Outside Services	$ 3,000
TOTAL ESTIMATED (NOT TO EXCEED) COST	**$ 46,195**

Exhibit 2 - Derivation of Person-Hours
Cottonwood WWTP - UV Disinfection Improvements
REV 1 - 16AUG2016
CLASSIFICATION

Task	Description	Principal	Senior Project Manager	Senior Engineer	Senior Professional	Project Engineer	Designer	Admin Support I	Admin Support II	Total
Task 1 - Final Design			Montoya	Payne		Shroup Colombo	Yurs	Walborn	Pfeffer	
Task 1.1	**Project Administration**									
Task 1.1.1	Kickoff Meeting		2							**2**
Task 1.1.2	Progress Meetings		2						2	**4**
Task 1.1.3	Submittal Review Meetings								2	**2**
Task 1.2	**Field Work and Design Criteria**									
Task 1.2.1	Preliminary Engineering		2							**2**
Task 1.2.2	As-Built Drawing Review		4							**4**
Task 1.2.3	Permit Evaluation		4							**4**
Task 1.2.4	Equipment Vendor Coordination		4							**4**
Task 1.3	**Final Design**									
Task 1.3.1	Final Design Drawings									
	60% Design			8			16			**24**
	90% Design			8			16			**24**
	100% Design			8			16			**24**
Task 1.3.2	Structural Design			8		24	8			**40**
Task 1.3.3	Electrical Design			8		64	8			**80**
Task 1.3.4	Instrumentation Design			8		16	8			**32**
Task 1.3.5	O&M Manual			8			8		4	**20**
Task 2 - Construction Phase Services										
Task 2.1	**Construction Management**									
Task 2.1.1	Onsite Assistance		8							**8**
Task 2.1.2	Startup and Commissioning		8							**8**
	Total	**0**	**34**	**56**	**0**	**104**	**80**	**0**	**8**	**282**

Exhibit 3 - Estimated Direct Expenses
Cottonwood WWTP - UV Disinfection Improvements
REV 1 - 16AUG2016

(Costs Rounded to the Nearest $1.00)

MILEAGE

Location	No. of Trips	Miles	Total Miles
Meetings	2	102	204
Site Visit	6	102	612
Total Estimated Miles			816
Total Cost at $ 0.58 per mile			**$ 473**

REPRODUCTIONS

Type	Amount	Unit Cost	Total Cost
Plotting and sheet preparation	100	$ 10.00	$ 1,000
Photocopy (8 1/2" x 11")	25	$ 0.05	$ 1
Photocopy (11" x 17")	0	$ 0.15	$ 0
Displays (24" x 36")	0	$ 80.00	$ 0
Mylars	0	$ 14.00	$ 0
Total Estimated Reproductions			**$ 1,001**

TOTAL ESTIMATED DIRECT EXPENSES **$ 1,475**

Mingus Av. WWTP UV Disinfection System Replacement

ID	Task Name	Duration	Start	Finish
1	Project Kickoff / Goals	1 day	Thu 7/28/16	Thu 7/28/16
2	Contract Execution	3 days	Tue 9/6/16	Thu 9/8/16
3	DEQ Permitting	0 days	Thu 7/28/16	Thu 7/28/16
4	Notice to Proceed	0 days	Thu 9/8/16	Thu 9/8/16
5	**Design Phase**	**36 days**	**Thu 7/28/16**	**Mon 9/19/16**
6	Design Kickoff Meeting	1 day	Thu 7/28/16	Thu 7/28/16
7	90% Design	15 days	Fri 7/29/16	Thu 8/18/16
8	Design Review	10 days	Fri 8/19/16	Fri 9/2/16
9	Final Plans	10 days	Tue 9/6/16	Mon 9/19/16
10	**Construction Phase**	**44 days**	**Mon 10/3/16**	**Mon 12/5/16**
11	Mobilization	1 day	Mon 10/3/16	Mon 10/3/16
12	Install Bulkhead for Wall Core	1.5 days	Tue 10/4/16	Wed 10/5/16
13	Setup / Start Bypass (Channel 1 to Channel 3)	1 day	Wed 10/5/16	Thu 10/6/16
14	Unwater Clean Channel 2	0.5 days	Thu 10/6/16	Thu 10/6/16
15	Inspect Existing Concrete Walls	0.5 days	Fri 10/7/16	Fri 10/7/16
16	Repair Concrete Wall (If Required)	5 days	Fri 10/7/16	Fri 10/14/16
17	Core Hole in Existing Wall	0.5 days	Fri 10/7/16	Fri 10/7/16
18	Form / Rebar / Concrete New Channel Wall	7 days	Wed 10/12/16	Thu 10/20/16
19	Modify Existing Weir Wall	2 days	Fri 10/21/16	Mon 10/24/16
20	Install New Channel Floor	2 days	Tue 10/25/16	Wed 10/26/16
21	Install Concrete Pad / Electrical Building	3 days	Thu 10/27/16	Mon 10/31/16
22	New Electrical Conduit / Panels	10 days	Fri 10/7/16	Fri 10/21/16
23	Install Wedeco Duron System	10 days	Tue 11/1/16	Mon 11/14/16
24	Integrate / Test Wedeco Duron System	2 days	Tue 11/15/16	Wed 11/16/16
25	Core Hole in Existing Wall	1 day	Tue 10/25/16	Tue 10/25/16
26	Startup Wedeco Duron System	3 days	Thu 11/17/16	Mon 11/21/16
27	Remove Bypass	1 day	Tue 11/22/16	Tue 11/22/16
28	Remove Existing Trojan 3000	2 days	Wed 11/23/16	Mon 11/28/16
29	Abandon Channel 1	3 days	Tue 11/29/16	Thu 12/1/16
30	Grating Modifications	2 days	Wed 11/23/16	Mon 11/28/16
31	Final Walkthrough	0.5 days	Fri 12/2/16	Fri 12/2/16
32	Final Site Cleanup	0.5 days	Fri 12/2/16	Fri 12/2/16
33	Demobilization	1 day	Mon 12/5/16	Mon 12/5/16
34	Project Completion	0 days	Mon 12/5/16	Mon 12/5/16

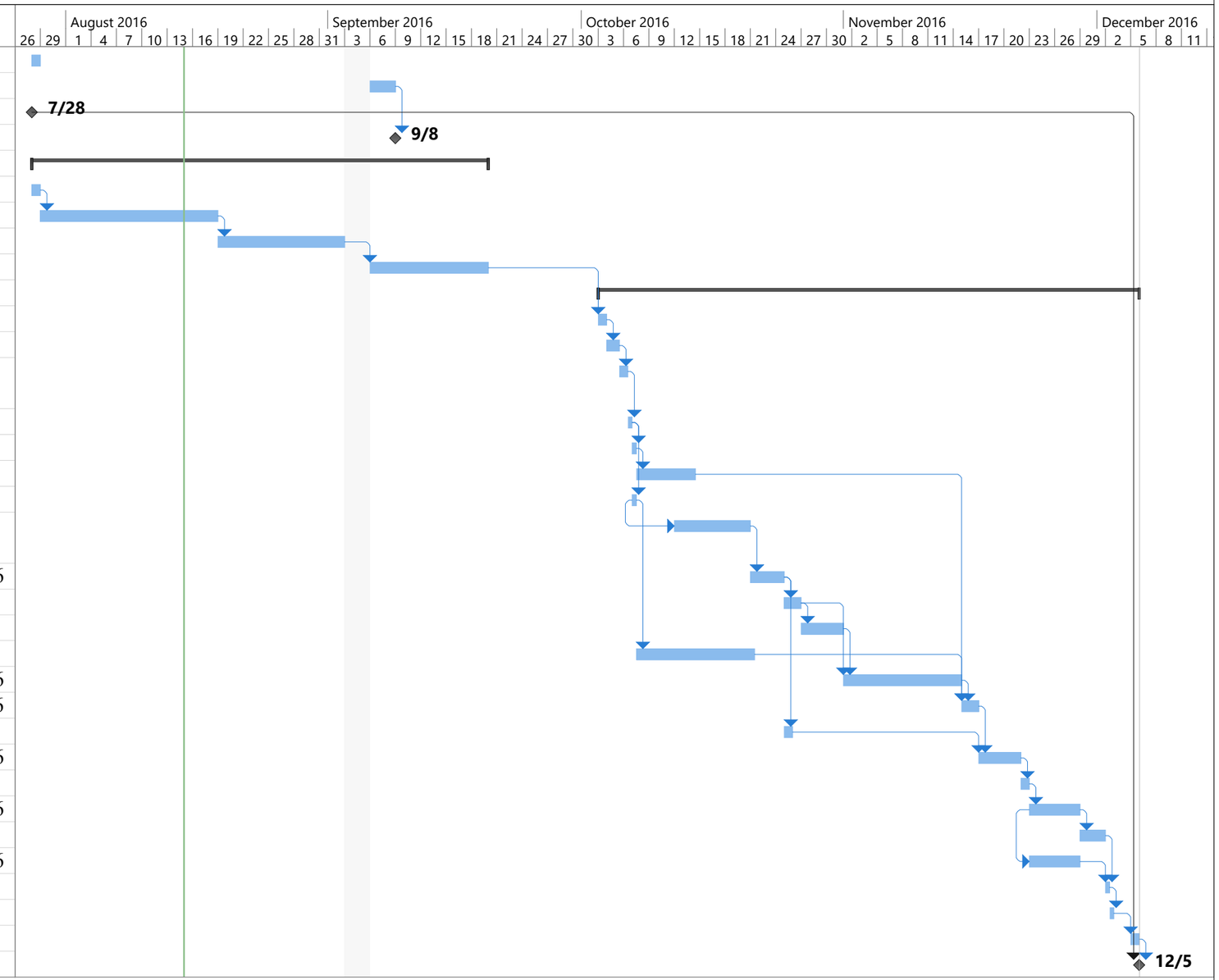

Project: Mingus Av. WWTP UV
Date: Mon 8/15/16

Task		Project Summary		Manual Task		Start-only		Deadline	
Split		Inactive Task		Duration-only		Finish-only		Progress	
Milestone		Inactive Milestone		Manual Summary Rollup		External Tasks		Manual Progress	
Summary		Inactive Summary		Manual Summary		External Milestone			

City of Cottonwood, Arizona
City Council Agenda Communication

Print

Meeting Date:	September 6, 2016
Subject:	Bolted Steel Reservoir purchase
Department:	City Clerk
From:	Utilities - Roger Biggs

REQUESTED ACTION

Ratification of the rejection of all bids provided in response to IFB 2016-PW-10 as well as award and approval of the contract for IFB 2017-PW-01; Fabrication and Erection of One (1) Powder Coated Bolted Steel Reclaimed Water Storage Tank.

Staff is requesting that Council review and award the contract for the Fabrication and Erection of One (1) Powder Coated Bolted Steel Reclaimed Water Storage Tank for the Riverfront Water Reclamation Facility to CST Storage, Inc.

SUGGESTED MOTION

If the Council desires to approve this item the suggested motion is:

"I move to approve the cancellation of IFB 2016-PW-10 and to approve the contract resulting from IFB 2017-PW-01 for the Fabrication and Erection of One (1) Powder Coated Bolted Steel Reclaimed Water Storage Tank to CST Storage, Inc. for the contract price of $219,575.00."

BACKGROUND

On April 4th, 2016 staff issued an Invitation for Bids for services to provide the City with a Powder Coated, Bolted Steel Reclaimed Water Storage Tank. The intent of this solicitation was to enter into an agreement for a contractor to construct this tank as part of the Riverfront Water Reclamation Facility.

The solicitation was published in the newspaper in consecutive weeks and was posted on Public Purchase as well as the City website. Four (4) completed bids were received by the deadline.

The low bid of $289,694.00 provided by United Tank Services, the apparent low bidder, contained irregularities in the fact that the contracting license listed did not match the name on the bid bond. Because the next lowest bid was $15,000 higher and was more than the anticipated cost for the project, City Staff opted to reject all bids and re-bid the project.

The City released a new Invitation for Bids and the solicitation was again published in the newspaper in consecutive weeks and was posted on Public Purchase as well as the City website. Three (3) completed bids were received by the deadline.

The low bid of $219,575.00 was provided by CST Storage—which represents a savings of more than $70,000.00 compared to the previous apparent low bid.

JUSTIFICATION/BENEFITS/ISSUES

Bolted steel reservoirs provide a safe, cost effective bulk water storage solution in comparison to welded steel or concrete tanks. The requested tank will serve as an irrigation reservoir at the Riverfront Water Reclamation Facility.

COST/FUNDING SOURCE

Riverfront Water Reclamation Facility construction funds.

ATTACHMENTS:		
Name:	Description:	Type:
CST_Council_Packet.pdf	Contract	Cover Memo

City of Cottonwood, Arizona

NOTICE OF FORMAL SOLICITATION

SOLICITATION TYPE:	**INVITATION FOR BIDS**
COMMODITY/SERVICE SOUGHT:	**Fabrication and Erection of One (1) Powder Coated Bolted Steel Reclaimed Water Storage Tank**
SOLICITATION INVITATION NO.:	**2017-PW-01**
BID DUE DATE AND TIME:	**August 5th, 2016 10:00 AM local Arizona time**
LOCATION:	**City of Cottonwood** **Administrative Services Department** **Purchasing Division** **816 N. Main Street** **Cottonwood, Arizona 86326**

Pursuant to Arizona Revised Statutes Section 34-201, notice is hereby given that the City of Cottonwood ("City") will accept bids with the intention of entering into a contract for: the Fabrication and Erection of One (1) Powder Coated Bolted Steel Reclaimed Water Storage Tank, (the "Project"). The Riverfront Reclamation Facility is located at 1083 E. Riverfront Drive, Cottonwood, Arizona 86326.

Bids shall be enclosed in a sealed envelope clearly identified as **Fabrication and Erection Of One (1) Powder Coated Bolted Steel Reclaimed Water Storage Tank.** The name and address of the entity submitting the Bid shall also be clearly marked on the sealed envelope. It is the sole responsibility of the entity submitting the bid to see that his/her bid is received at the proper time. The bid shall be submitted to the **City of Cottonwood, Purchasing Division, 816 N Main Street, Cottonwood, AZ 86326 by 10:00 AM on Friday, August 5th, 2016**, at which time all bids shall be opened and the name of each Bidder and the amount of its bid shall be publicly read. Late bids will not be considered and will be returned unopened.

Contractors desiring to submit bids may obtain PDF versions of the plans and specifications and other information pertaining to the Project via email by contacting the Purchasing Division at jcook@Cottonwoodaz.gov. Documents can also be obtained through the Public Purchase website at www.publicpurchase.com.

There will not be a pre-bid meeting for this solicitation.

Every bid shall be accompanied by a certified check, cashier's check or surety bond for ten percent (10%) of the amount of the bid as a guarantee that if selected, the Bidder will enter into a contract to construct the Project in accordance with the plans and specifications. Any surety bond submitted in compliance with this requirement shall be executed by a surety company or companies holding a certificate of authority to transact surety business in this state issued by the director of the Department of Insurance pursuant to Arizona Revised Statutes Title 20, Chapter 2, Article 1; shall follow the form prescribed in Arizona Revised Statutes Section 34-201; and all liabilities on the bond shall be determined in accordance with that section as if it were copied at length therein.

The City of Cottonwood will select a vendor based on the lowest responsible and responsive bid. In accordance with Arizona Revised Statutes Section 34-201(A) (4), the City reserves the right to reject any or all bids or to withhold the award for any reason the City determines.

Publish Date: Verde Independent – Sunday, July 24th, 2016 and Sunday, July 31st, 2016

OFFER

The undersigned (the "Bidder") hereby offers this Bid as an offer to contract with the City under the terms and conditions set forth below and certifies that Bidder has read, understands and agrees to fully comply with, and be contractually bound by, all terms and conditions as set forth in this Invitation For Bids ("IFB"), the Contract formed hereby (as defined below) and any amendments thereto, together with all Exhibits, Specifications, Plans and other documents included as part of this Contract (the "Contract Documents").

Arizona Transaction (Sales) Privilege Tax License Number: ROC 197022 Federal Employer Identification Number: CST Storage Inc Contractor Name 903 E. 104th St. Suite 200 Address Kansas City MO 64131 City State Zip Code	For Clarification of this Bid contact: Name: Steve McRoberts Telephone: 913 815-1303 Facsimile: Email: smcroberts@cst-storage.com **Authorized Signature for Contractor** Steve McRoberts Printed Name Director Project Management Title

ACCEPTANCE OF OFFER AND NOTICE OF AWARD (FOR CITY OF COTTONWOOD USE ONLY)

Effective Date:_____ Contract No._____ Official File:_____

CITY OF COTTONWOOD, an Arizona municipal corporation

_____
Diane Joens, Mayor

ATTEST:

_____
Marianne Jimẽnez, City Clerk

APPROVED AS TO FORM:

_____
Steve Horton, City Attorney

PRICE SHEET

Fabrication and Erection of One (1) Powder Coated Bolted
Steel Reclaimed Water Storage Tank
2017-PW-01

NOTE: All pricing blanks must be filled in. Empty or unfilled spaces in the Bid Price Sheet shall result in a determination that a Bid is non-responsive.

Item No.	Description of Materials and/or Services	Qty	Unit	Total Price
1	ONE (1) Tank Per Specifications Contained within IFB	1	EA	$219,575
	TOTAL CONSTRUCTION COST*			$219,575

*** ALL BIDS ARE PRESUMED TO INCLUDE ALL APPLICABLE TAXES. CONTRACTOR IS RESPONSIBLE FOR ENSURING THAT ALL WORK CONTEMPLATED BY THE PLANS FOR THE PROJECT IS BID ON THE PRICE SHEET. THE CITY RESERVES THE RIGHT TO AWARD ANY OR ALL OF THE ITEM NUMBERS LISTED ABOVE AS THE CONTRACT.**

SECTION 13210

POWDER COATED BOLTED STEEL RECLAIMED WATER STORAGE TANK

Part 1 - GENERAL

1.1 SCOPE

A. Furnish and erect a fusion bonded powder coated, bolted-steel reclaimed water storage tank which will serve as a wet well for the Riverfront Water Reclamation Facility (RWRF) pumps. The tank will receive effluent from the tertiary filters.

B. Work shall include the complete furnishing and installation of all labor, materials, equipment and appurtenances as shown on the drawings and described herein. Equipment numbers are:

Name	Number
Reclaimed Water Reservoir	RT-2001

1.2 RELATED WORK

A. Tank manufacturer shall provide all openings and fittings required for the pumping system, as shown on the drawings.

B. Tank manufacturer shall provide all openings and fittings required for the instrumentation and control systems.

1.3 QUALITY ASSURANCE

A. Only manufacturers specializing in the design, fabrication and erection of factory applied epoxy coated, bolt together tank systems shall bid on this work. Manufacturer shall fabricate and coat the tank in the same facility which it owns and operates.

B. Erection of the tank is to be by tank manufacturer. The CONTRACTOR currently working at the site will prepare the tank foundation per separate specification and per AWWA D103-09 Type 5. The tank manufacturer shall review the geotechnical report and field compaction test results for the tank base and provide recommendations for base preparation suitable for the proposed tank.

1.4 REFERENCES

A. The manufacturer shall have installed a minimum of 5 similar tanks over the past 10 years in climate similar to that in Cottonwood, Az.

B. The tank shall meet the AWWA specifications contained in the latest edition of Section 2 of AWWA Specification D103 for Factory-Coated, Bolted Carbon Steel Tanks for Water Storage.

1.5 SUBMITTALS

Shop Drawings Submittals shall comply with Section 01300 and include the following as a minimum.

A. Resume of tank installation superintendent.

B. List of five (5) similar tanks previously constructed and designed to AWWA D103 standards.

C. List of five (5) tanks similar previously constructed and designed to AWWA D.013-09 Seismic Use Group #2 or #3.

D. Seven (7) sets of complete shop drawings showing all materials, configuration and fabrication details associated with the tank which contains the following:

1. Dimension Drawings

2. Joint bolting

3. Accessory list with fabrication details

4. Erection drawings, catalog data and description of manufactured items

5. Coating System

E. Mill test reports

F. Complete set of structural calculations for the tank structure and foundation, which includes the following design requirements.

1. 100 mph wind load

2. 15 PSF Deck live load

3. Zone 2 Seismic requirements

1.6 DELIVERY, STORAGE AND HANDLING

A. All materials shall be protected within a climate controlled building against direct sunlight, rain, wind and snow prior to erection.

B. All materials shall be inspected prior to erection by tank manufacturer to determine compliance with the Contract Documents and submittal information. In the event manufacturer determines that materials delivered to the site are not in compliance, they shall be removed from the site, and replaced at no cost to the city.

1.7 WARRANTY

A. Tank manufacturer shall warrant to the city that all materials and accessories furnished under this contract shall be new and free from faults and defects following erection and testing.

B. The tank manufacturer shall warrant the tank shall be free from any defect in material or workmanship, under design use, for a period of two (2) years after erection.

PART 2 - PRODUCTS

2.1 ACCEPTABLE MANUFACTURERS.

Tank shall be provided by the following manufacturers, or approved equal, providing they comply with these specifications.

1. Superior Tank Co.; Rancho Cucamonga, CA.
2. American Tank Co. Windsor, CA.
3. Approved equal

2.2. DESIGN CRITERIA

1. Tank Size. Tank shall have a nominal diameter of 62 feet with a nominal sidewall height (to roof eave) of 24 feet.

2. Tank Capacity. Tank working capacity shall be 500,000 gallons (nominal, U.S. gallons).

3. Tank Freeboard. Tank freeboard shall be 1 foot.

2.3. PIPING AND APPURTANCES

1. The reservoir shall be furnished with piping and appurtenances as shown on the plans and as follows:

   a. 8 inch inlet pipe
   b. 6 inch overflow pipe
   c. 10 inch outlet pipe
   d. 4 inch drain pipe
   e. 24" square, hinged, lockable roof hatch (Bilco Co. Type D, or equal)
   f. One 24 inch diameter shell manhole with hinged cover
   g. 2 – 3.5' high handrails enclosing the roof hatch and the top of the ladder.
   h. Outside ladder with ladder gate and lock, with fall protection
   i. Inside ladder without fall protection
   j. 6 inch screened gooseneck roof vent
   k. Level indicator/transducer
   l. Identification name plate
   m. Antenna mount

2.4. TANK MATERIALS

1. The materials, design, fabrication and erection of the bolt together tank shall conform to the AWWA Standard for "Factory-Coated Bolted Steel Tanks For Water Storage" – ANSI/AWWA D103-09.

2. The tank coating system shall conform to Section 10.6 Thermoset Powder Coatings of ANSI/AWWA D103-09.

3. Plates and Sheets design requirements for mild strength steel shall be ASTM A36 or ASTM A1011 Grade 30, 36, 40, or 50 with a maximum allowable tensile stress 18,000 psi.

4. Design requirements for high strength steel shall be ASTM A1011 Grade 42, 50, 55, or 60 with a maximum allowable tensile stress of 30,000 psi. unless otherwise noted in the engineering specifications and/or submittals.

5. Rolled Structural Shapes material shall conform to minimum standards of ASTM A36 or AISI 1010.

2.5. BOLT FASTENERS

1. Bolts used in tank lap joints shall be ½ - 13 UNC-2A rolled thread, and shall meet the minimum requirements of AWWA D103, Section 2.2.

2. Bolt Material

a. SAE Grade 5 (1" thru 1 ½")

b. Tensile strength – 105,000 psi Min

c. Proof Load – 74,000 psi Min.

d. SAE Grade 8 (1" thru 1 ½")

e. Tensile Strength – 150,000 psi Min.

f. Proof Load – 120,000 psi min.

3. Bolt Finish

a. Zinc, mechanically deposited.

b. 2.0 Mils Minimum – under bolt head, on shank and threads.

4. Bolt Head Encapsulation

a. High impact polypropylene copolymer encapsulation of entire bolt head up to the splines on the shank.

b. Resin shall be stabilized with an ultraviolet light resistant material such that the color shall appear black.

5. All bolts on the vertical tank wall shall be installed such that the head portion is located inside the tank, and the washer and nut are on the exterior.

6. Bolt lengths shall be sized to achieve a neat and uniform appearance. Excessive threads extending beyond the nut after torqueing will not be permitted.

2.6 SEALANTS

1. The lap joint sealant shall be a one component, moisture cured, polyurethane compound.

2. The sealant shall be used to seal lap joints and bolt connections and edge inlets for sheet notches and starter sheets. The sealant shall cure to a rubber-like consistency, have excellent adhesion to the epoxy coating, low shrinkage, and be suitable for interior and exterior use.

3. Sealant curing rate at 73° F and 50% RH

4. Tack-free time: 6 to 8 hours

5. Final cure time: 10 to 12 days

6. Neoprene gaskets and tape type sealer shall not be used in liquid contacting surfaces.

2.7 THERMOSET POWDER COATING

The thermoset powder coatings shall be applied according to the tank manufacturer's specific procedure. Thermoset powder coatings shall comply with the following:

1. Surface preparation. The steel shall be steel-grit-blasted on all sides in accordance with SSPC SP10/NACE No. 2.

2. Application. The coating shall be applied as follows:

   Within 30 minutes of blast cleaning, the interior and exterior surfaces shall be dry-powder coated by electrostatic application with a powder coating.

   The dry powder shall be deposited at a rate to yield 5-mil minimum dry film thickness interior, and 3-mil minimum dry film thickness exterior.

   The surfaces shall be oven-cured in accordance with the coating manufacturer's recommendations.

3. Inspection. Interior and exterior coated surfaces shall be inspected for visible defects or holidays. Coating thickness shall be verified by a nondestructive mil-thickness test (Mikrotest or equal). Interior coating inspection shall include a holiday detection test and solvent rub test in accordance with ASTM D5402 for organic coatings and ASTM D4752 for ethyl silicate (inorganic) zinc rich primers. Any coating defect shall be repaired and shall pass inspection prior to shipment.

4. Holiday Testing. All holiday tests shall be nondestructive and shall use an electric DC meter and a wet sponge holiday detector operated by a trained technician in accordance with NACE SP0188 and ASTM D5162. The maximum voltage of the meter shall not exceed 67.5 volts. The sponge shall be dipped in plain tap water as required to keep it uniformly damp, not soaked or dry. Unless specifically required by the testing equipment manufacturer, no "conductive" or "wetting" additives shall be used.

2.8 PROTECTION

All coated parts shall be protected from damage during shipment.

PART 3 - EXECUTION

3.1. INSTALLATION

A. Foundation

1 The tank manufacturer shall confirm that the foundation design shall safely sustain the structure and its live loads. Copies of the soil report are included in the contract documents.

B. Sidewall Structure

1. Field erection of the bolted steel tank shall be in strict accordance with the procedures outline by the manufacturer, using factory trained erectors.

2. Particular care shall be taken in handling and bolting of the tank panels and members to avoid abrasion of the coating system. Prior to a liquid test, the Engineer may visually inspect all surface areas.

3. An electrical leak test shall be performed during erection using a wet sponge low voltage leak detection device. All electrical leak points found on the inside surface shall be repaired in accordance with manufacturer's published touch up procedures.

4. The placement of sealant on each panel may be inspected prior to placement of adjacent panels; however, inspection will not relieve the bidder from his responsibility for liquid tightness.

C. Appurtenances

1. Pipe Connections:

   a. Where pipe connections are shown to pass through tank panels, they shall be located, saw cut, (acetylene torch cutting or welding is not permitted), and utilize an interior and exterior angle assembly and the tank shell reinforcing shall comply with AWWA D103. A single component urethane sealer shall be applied on any cut panel edges or bolt connections.

2. Outside Tank Ladder:

   a. An outside tank ladder shall be furnished and installed as shown on the drawings. Safety cage and platforms shall be fabricated of galvanized steel. Ladder shall be equipped with a hinged lockable entry device.

3. Access Door:

a. One bottom access door shall be provided in accordance with AWWA D103.

b. The opening shall be a minimum of 24 inches in diameter. The access door (shell manhole) and the tank shell reinforcing shall comply with AWWA D103, Sec. 5.1.

4. Name Plate:

a. A manufacturer's nameplate shall list the tank serial number, tank diameter and height and maximum design capacity. The nameplate shall be to the tank exterior sidewall at a location next to the access door.

5. Antenna Mount:

a. An antenna mount and brackets shall be furnished and installed for the City's communication equipment.

3.2 FIELD TESTING

A. Hydrostatic

1. Following completion of erection and cleaning of the tank, the structure shall be tested for liquid tightness.

2. The CONTRACTOR in accordance with the manufacturer's recommendations shall correct any leaks disclosed by this test.

3. The OWNER shall furnish water required for testing at the time of tank completion at no charge to the tank erector. Disposal of test water shall be the responsibility of the OWNER.

B. Vacuum Test

1. Test for porosity in the bolted joints of the tank bottom by observation of bubbles in a soap solution with a glass top metal testing box connected to equipment that produces a vacuum of at least two (2) PSI. Correct deficiencies.

3.3 DISINFECTION

1. Standards

a. The tank structure shall be disinfected at the time of testing by chlorination in accordance with AWWA Standard C652 "Disinfection of Water Storage Facilities".

2. Disinfection shall not take place until tank sealant is fully cured.

****END OF SECTION****

City of Cottonwood, Arizona
City Council Agenda Communication

Print

Meeting Date:	September 6, 2016
Subject:	Inspection Services for the Riverfront Water Reclamation Facility
Department:	Development Services
From:	Roger Biggs, Utilities Administrative Manager

REQUESTED ACTION

Consider awarding a contract to Shephard-Wesnitzer Inc. (SWI) to perform on call inspection services at the Riverfront Water Reclamation Facility.

SUGGESTED MOTION

If the Council desires to approve this item the suggested motion is:

"I move to award a contract to Shephard-Wesnitzer Inc. (SWI) to perform on call inspection services at the Riverfront Water Reclamation Facility (WRF) for a not to exceed amount of $125,000.00."

BACKGROUND

In an effort to cut costs for the Riverfront Water Reclamation Facility (WRF) the Scope of Work for the engineer of record was cut back and did not require the engineer to perform inspection services. Instead this task was assigned to City staff. The City Engineer, Robert Winiecke has taken on this task in addition to the task of serving as the City's project manager for the project, and together these tasks have become a full-time position for him. Robert has done an outstanding job in performing both of these duties, however many other tasks normally performed by the City Engineer have been pushed aside as a result, including flood plain compliance, storm water compliance, responding to drainage and flood plain questions from the public, and work on other capital projects. For this reason staff is suggesting that an outside engineering firm be engaged to handle the daily inspections of the project while still reporting to the City Engineer as the project manager.

Staff will also suggest in a separate Council item that the Council consider awarding an on-call engineering services contract to SWI Inc. which will allow the City Engineer to choose when more time is needed for the Riverfront WRF and when more time is needed on other engineering services. This on-call service contract will be for a not to exceed amount of $50,000.00.

Staff solicited resumes/letters of interest from three local engineering firms to measure their experience with these types of projects and recommends that SWI be selected to provide these services.

JUSTIFICATION/BENEFITS/ISSUES

The proposed engagement of SWI will allow the project to continue running smoothly while allowing the City Engineer to perform other job-related duties outside of this project as well.

COST/FUNDING SOURCE

Waste Water

ATTACHMENTS:		
Name:	Description:	Type:
SWI_-_1.pdf	Agreement	Cover Memo

PROFESSIONAL SERVICES AGREEMENT
BETWEEN
THE CITY OF COTTONWOOD
AND
SHEPHARD WESNITZER, INC.

THIS PROFESSIONAL SERVICES AGREEMENT (this "Agreement") is entered into as of September 6th, 2016, between the City of Cottonwood, an Arizona municipal corporation (the "City"), and Shephard Wesnitzer, Inc., a professional engineering firm (the "Consultant").

RECITALS

A. The City issued a invitation for three local firms to submit resumes, seeking qualifications from vendors for professional consulting services. State statute allows for direct selection of engineering firms for contracts less than $500,000.

B. The Consultant responded to the invitation by submitting a resume, attached hereto as Exhibit A and incorporated herein by reference, and the City desires to enter into an Agreement with the Consultant for on call inspection services at the Riverfront Water Reclamation Facility (the "Services").

AGREEMENT

NOW, THEREFORE, in consideration of the foregoing recitals, which are incorporated herein by reference, the following mutual covenants and conditions, and other good and valuable consideration, the receipt and sufficiency of which are hereby acknowledged, the City and the Consultant hereby agree as follows:

1. Term of Agreement. This Agreement shall be effective as of the date first set forth above and shall remain in full force and effect until project completion or June 30th, 2017 (the "Initial Term"), unless terminated as otherwise provided in this Agreement.

2. Scope of Work. Consultant shall provide the Services as set forth in the Scope of Work, attached hereto as Exhibit B and incorporated herein by reference.

3. Compensation. The City shall pay Consultant an amount not to exceed one hundred twenty-five thousand dollars ($125,000.00) for the Services at the rates set forth in the Fee Proposal, attached hereto as Exhibit C and incorporated herein by reference.

4. Payments. The City shall pay the Consultant monthly, based upon work performed and completed to date, and upon submission and approval of invoices. All invoices shall document and itemize all work completed to date. Each invoice statement shall include a record of time expended and work performed in sufficient detail to justify payment.

5. Documents. All documents, including any intellectual property rights thereto, prepared and submitted to the City pursuant to this Agreement shall be the property of the City.

6. Consultant Personnel. Consultant shall provide adequate, experienced personnel, capable of and devoted to the successful performance of the Services under this Agreement. Consultant agrees to assign specific individuals to key positions. If deemed qualified, the Consultant is encouraged to hire City residents to fill vacant positions at all levels. Consultant agrees that, upon commencement of the Services to be performed under this Agreement, key personnel shall not be removed or replaced without prior written notice to the City. If key personnel are not available to perform the Services for a

continuous period exceeding 30 calendar days, or are expected to devote substantially less effort to the Services than initially anticipated, Consultant shall immediately notify the City of same and shall, subject to the concurrence of the City, replace such personnel with personnel possessing substantially equal ability and qualifications.

7. Inspection; Acceptance. All work shall be subject to inspection and acceptance by the City at reasonable times during Consultant's performance. The Consultant shall provide and maintain a self-inspection system that is acceptable to the City.

8. Licenses; Materials. Consultant shall maintain in current status all federal, state and local licenses and permits required for the operation of the business conducted by the Consultant. The City has no obligation to provide Consultant, its employees or subcontractors any business registrations or licenses required to perform the specific services set forth in this Agreement. The City has no obligation to provide tools, equipment or material to Consultant.

9. Performance Warranty. Consultant warrants that the Services rendered will conform to the requirements of this Agreement and to the highest professional standards in the field.

10. Indemnification. To the fullest extent permitted by law, the Consultant shall indemnify and hold harmless the City and each council member, officer, employee or agent thereof (the City and any such person being herein called an "Indemnified Party"), for, from and against any and all losses, claims, damages, liabilities, costs and expenses (including, but not limited to, reasonable attorneys' fees, court costs and the costs of appellate proceedings) to which any such Indemnified Party may become subject, under any theory of liability whatsoever ("Claims") to the extent that such Claims (or actions in respect thereof) are caused by the negligent acts, recklessness or intentional misconduct of the Consultant, its officers, employees, agents, or any tier of subcontractor in connection with Consultant's work or services in the performance of this Agreement. The amount and type of insurance coverage requirements set forth below will in no way be construed as limiting the scope of the indemnity in this Section.

11. Insurance.

11.1 General.

A. Insurer Qualifications. Without limiting any obligations or liabilities of Consultant, Consultant shall purchase and maintain, at its own expense, hereinafter stipulated minimum insurance with insurance companies authorized to do business in the State of Arizona pursuant to ARIZ. REV. STAT. § 20-206, as amended, with an AM Best, Inc. rating of A- or above with policies and forms satisfactory to the City. Failure to maintain insurance as specified herein may result in termination of this Agreement at the City's option.

B. No Representation of Coverage Adequacy. By requiring insurance herein, the City does not represent that coverage and limits will be adequate to protect Consultant. The City reserves the right to review any and all of the insurance policies and/or endorsements cited in this Agreement, but has no obligation to do so. Failure to demand such evidence of full compliance with the insurance requirements set forth in this Agreement or failure to identify any insurance deficiency shall not relieve Consultant from, nor be construed or deemed a waiver of, its obligation to maintain the required insurance at all times during the performance of this Agreement.

C. Additional Insured. All insurance coverage and self-insured retention or deductible portions, except Workers' Compensation insurance and Professional Liability insurance, if applicable, shall name, to the fullest extent permitted by law for claims arising out of the performance of this Agreement, the City, its agents, representatives, officers, directors, officials and employees as Additional Insured as specified under the respective coverage sections of this Agreement.

D. Coverage Term. All insurance required herein shall be maintained in full force and effect until all work or services required to be performed under the terms of this Agreement are satisfactorily performed, completed and formally accepted by the City, unless specified otherwise in this Agreement.

E. Primary Insurance. Consultant's insurance shall be primary insurance with respect to performance of this Agreement and in the protection of the City as an Additional Insured.

F. Claims Made. In the event any insurance policies required by this Agreement are written on a "claims made" basis, coverage shall extend, either by keeping coverage in force or purchasing an extended reporting option, for three years past completion and acceptance of the services. Such continuing coverage shall be evidenced by submission of annual Certificates of Insurance citing applicable coverage is in force and contains the provisions as required herein for the three-year period.

G. Waiver. All policies, except for Professional Liability, including Workers' Compensation insurance, shall contain a waiver of rights of recovery (subrogation) against the City, its agents, representatives, officials, officers and employees for any claims arising out of the work or services of Consultant. Consultant shall arrange to have such subrogation waivers incorporated into each policy via formal written endorsement thereto.

H. Policy Deductibles and/or Self-Insured Retentions. The policies set forth in these requirements may provide coverage that contains deductibles or self-insured retention amounts. Such deductibles or self-insured retention shall not be applicable with respect to the policy limits provided to the City. Consultant shall be solely responsible for any such deductible or self-insured retention amount.

I. Use of Subcontractors. If any work under this Agreement is subcontracted in any way, Consultant shall execute written agreements with its subcontractors containing the indemnification provisions set forth in this Section and insurance requirements set forth herein protecting the City and Consultant. Consultant shall be responsible for executing any agreements with its subcontractors and obtaining certificates of insurance verifying the insurance requirements.

J. Evidence of Insurance. Prior to commencing any work or services under this Agreement, Consultant will provide the City with suitable evidence of insurance in the form of certificates of insurance and a copy of the declaration page(s) of the insurance policies as required by this Agreement, issued by Consultant's insurance insurer(s) as evidence that policies are placed with acceptable insurers as specified herein and provide the required coverages, conditions and limits of coverage specified in this Agreement and

that such coverage and provisions are in full force and effect. Confidential information such as the policy premium may be redacted from the declaration page(s) of each insurance policy, provided that such redactions do not alter any of the information required by this Agreement. The City shall reasonably rely upon the certificates of insurance and declaration page(s) of the insurance policies as evidence of coverage but such acceptance and reliance shall not waive or alter in any way the insurance requirements or obligations of this Agreement. If any of the policies required by this Agreement expire during the life of this Agreement, it shall be Consultant's responsibility to forward renewal certificates and declaration page(s) to the City 30 days prior to the expiration date. All certificates of insurance and declarations required by this Agreement shall be identified by referencing the RFQ number and title or this Agreement. A $25.00 administrative fee shall be assessed for all certificates or declarations received without the appropriate RFQ number and title or a reference to this Agreement, as applicable. Additionally, certificates of insurance and declaration page(s) of the insurance policies submitted without referencing the appropriate RFQ number and title or a reference to this Agreement, as applicable, will be subject to rejection and may be returned or discarded. Certificates of insurance and declaration page(s) shall specifically include the following provisions:

(1) The City, its agents, representatives, officers, directors, officials and employees are Additional Insureds as follows:

(a) Commercial General Liability – Under Insurance Services Office, Inc., ("ISO") Form CG 20 10 03 97 or equivalent.

(b) Auto Liability – Under ISO Form CA 20 48 or equivalent.

(c) Excess Liability – Follow Form to underlying insurance.

(2) Consultant's insurance shall be primary insurance with respect to performance of this Agreement.

(3) All policies, except for Professional Liability, including Workers' Compensation, waive rights of recovery (subrogation) against City, its agents, representatives, officers, officials and employees for any claims arising out of work or services performed by Consultant under this Agreement.

(4) ACORD certificate of insurance form 25 (2014/01) is preferred. If ACORD certificate of insurance form 25 (2001/08) is used, the phrases in the cancellation provision "endeavor to" and "but failure to mail such notice shall impose no obligation or liability of any kind upon the company, its agents or representatives" shall be deleted. Certificate forms other than ACORD form shall have similar restrictive language deleted.

11.2 Required Insurance Coverage.

A. Commercial General Liability. Consultant shall maintain "occurrence" form Commercial General Liability insurance with an unimpaired limit of not less than $1,000,000 for each occurrence, $2,000,000 Products and Completed Operations Annual Aggregate and a $2,000,000 General Aggregate Limit. The policy shall cover liability

arising from premises, operations, independent contractors, products-completed operations, personal injury and advertising injury. Coverage under the policy will be at least as broad as ISO policy form CG 00 010 93 or equivalent thereof, including but not limited to, separation of insured's clause. To the fullest extent allowed by law, for claims arising out of the performance of this Agreement, the City, its agents, representatives, officers, officials and employees shall be cited as an Additional Insured under ISO, Commercial General Liability Additional Insured Endorsement form CG 20 10 03 97, or equivalent, which shall read "Who is an Insured (Section II) is amended to include as an insured the person or organization shown in the Schedule, but only with respect to liability arising out of "your work" for that insured by or for you." If any Excess insurance is utilized to fulfill the requirements of this subsection, such Excess insurance shall be "follow form" equal or broader in coverage scope than underlying insurance.

B. Vehicle Liability. Consultant shall maintain Business Automobile Liability insurance with a limit of $1,000,000 each occurrence on Consultant's owned, hired and non-owned vehicles assigned to or used in the performance of the Consultant's work or services under this Agreement. Coverage will be at least as broad as ISO coverage code "1" "any auto" policy form CA 00 01 12 93 or equivalent thereof. To the fullest extent allowed by law, for claims arising out of the performance of this Agreement, the City, its agents, representatives, officers, directors, officials and employees shall be cited as an Additional Insured under ISO Business Auto policy Designated Insured Endorsement form CA 20 48 or equivalent. If any Excess insurance is utilized to fulfill the requirements of this subsection, such Excess insurance shall be "follow form" equal or broader in coverage scope than underlying insurance.

C. Professional Liability. If this Agreement is the subject of any professional services or work, or if the Consultant engages in any professional services or work adjunct or residual to performing the work under this Agreement, the Consultant shall maintain Professional Liability insurance covering negligent errors and omissions arising out of the Services performed by the Consultant, or anyone employed by the Consultant, or anyone for whose negligent acts, mistakes, errors and omissions the Consultant is legally liable, with an unimpaired liability insurance limit of $1,000,000 each claim and $2,000,000 annual aggregate.

D. Workers' Compensation Insurance. Consultant shall maintain Workers' Compensation insurance to cover obligations imposed by federal and state statutes having jurisdiction over Consultant's employees engaged in the performance of work or services under this Agreement and shall also maintain Employers Liability Insurance of not less than $500,000 for each accident, $500,000 disease for each employee and $1,000,000 disease policy limit.

11.3 Cancellation and Expiration Notice. Insurance required herein shall not expire, be canceled, or be materially changed without 30 days' prior written notice to the City.

12. Termination; Cancellation.

12.1 For City's Convenience. This Agreement is for the convenience of the City and, as such, may be terminated without cause after receipt by Consultant of written notice by the City. Upon termination for convenience, Consultant shall be paid for all undisputed services performed to the termination date.

12.2 For Cause. If either party fails to perform any obligation pursuant to this Agreement and such party fails to cure its nonperformance within 30 days after notice of nonperformance is given by the non-defaulting party, such party will be in default. In the event of such default, the non-defaulting party may terminate this Agreement immediately for cause and will have all remedies that are available to it at law or in equity including, without limitation, the remedy of specific performance. If the nature of the defaulting party's nonperformance is such that it cannot reasonably be cured within 30 days, then the defaulting party will have such additional periods of time as may be reasonably necessary under the circumstances, provided the defaulting party immediately (A) provides written notice to the non-defaulting party and (B) commences to cure its nonperformance and thereafter diligently continues to completion the cure of its nonperformance. In no event shall any such cure period exceed 90 days. In the event of such termination for cause, payment shall be made by the City to the Consultant for the undisputed portion of its fee due as of the termination date.

12.3 Due to Work Stoppage. This Agreement may be terminated by the City upon 30 days' written notice to Consultant in the event that the Services are permanently abandoned. In the event of such termination due to work stoppage, payment shall be made by the City to the Consultant for the undisputed portion of its fee due as of the termination date.

12.4 Conflict of Interest. This Agreement is subject to the provisions of ARIZ. REV. STAT. § 38-511. The City may cancel this Agreement without penalty or further obligations by the City or any of its departments or agencies if any person significantly involved in initiating, negotiating, securing, drafting or creating this Agreement on behalf of the City or any of its departments or agencies is, at any time while this Agreement or any extension of this Agreement is in effect, an employee of any other party to this Agreement in any capacity or a consultant to any other party of this Agreement with respect to the subject matter of this Agreement.

12.5 Gratuities. The City may, by written notice to the Consultant, cancel this Agreement if it is found by the City that gratuities, in the form of economic opportunity, future employment, entertainment, gifts or otherwise, were offered or given by the Consultant or any agent or representative of the Consultant to any officer, agent or employee of the City for the purpose of securing this Agreement. In the event this Agreement is canceled by the City pursuant to this provision, the City shall be entitled, in addition to any other rights and remedies, to recover and withhold from the Consultant an amount equal to 150% of the gratuity.

12.6 Agreement Subject to Appropriation. The City is obligated only to pay its obligations set forth in this Agreement as may lawfully be made from funds appropriated and budgeted for that purpose during the City's then current fiscal year. The City's obligations under this Agreement are current expenses subject to the "budget law" and the unfettered legislative discretion of the City concerning budgeted purposes and appropriation of funds. Should the City elect not to appropriate and budget funds to pay its Agreement obligations, this Agreement shall be deemed terminated at the end of the then-current fiscal year term for which such funds were appropriated and budgeted for such purpose and the City shall be relieved of any subsequent obligation under this Agreement. The parties agree that the City has no obligation or duty of good faith to budget or appropriate the payment of the City's obligations set forth in this Agreement in any budget in any fiscal year other than the fiscal year in which this Agreement is executed and delivered. The City shall be the sole judge and authority in determining the availability of funds for its obligations under this Agreement. The City shall keep Consultant informed as to the availability of funds for this Agreement. The obligation of the City to make any payment pursuant to this

Agreement is not a general obligation or indebtedness of the City. Consultant hereby waives any and all rights to bring any claim against the City from or relating in any way to the City's termination of this Agreement pursuant to this section.

13. Miscellaneous.

13.1 Independent Contractor. It is clearly understood that each party will act in its individual capacity and not as an agent, employee, partner, joint venturer, or associate of the other. An employee or agent of one party shall not be deemed or construed to be the employee or agent of the other for any purpose whatsoever. The Consultant acknowledges and agrees that the Services provided under this Agreement are being provided as an independent contractor, not as an employee or agent of the City. Consultant, its employees and subcontractors are not entitled to workers' compensation benefits from the City. The City does not have the authority to supervise or control the actual work of Consultant, its employees or subcontractors. The Consultant, and not the City, shall determine the time of its performance of the services provided under this Agreement so long as Consultant meets the requirements of its agreed Scope of Work as set forth in Section 2 above and in Exhibit B. Consultant is neither prohibited from entering into other contracts nor prohibited from practicing its profession elsewhere. City and Consultant do not intend to nor will they combine business operations under this Agreement.

13.2 Applicable Law; Venue. This Agreement shall be governed by the laws of the State of Arizona and suit pertaining to this Agreement may be brought only in courts in Yavapai County, Arizona.

13.3 Laws and Regulations. Consultant shall keep fully informed and shall at all times during the performance of its duties under this Agreement ensure that it and any person for whom the Consultant is responsible abides by, and remains in compliance with, all rules, regulations, ordinances, statutes or laws affecting the Services, including, but not limited to, the following: (A) existing and future City and County ordinances and regulations, (B) existing and future State and Federal laws and (C) existing and future Occupational Safety and Health Administration standards.

13.4 Amendments. This Agreement may be modified only by a written amendment signed by persons duly authorized to enter into contracts on behalf of the City and the Consultant.

13.5 Provisions Required by Law. Each and every provision of law and any clause required by law to be in this Agreement will be read and enforced as though it were included herein and, if through mistake or otherwise any such provision is not inserted, or is not correctly inserted, then upon the application of either party, this Agreement will promptly be physically amended to make such insertion or correction.

13.6 Severability. The provisions of this Agreement are severable to the extent that any provision or application held to be invalid by a Court of competent jurisdiction shall not affect any other provision or application of this Agreement which may remain in effect without the invalid provision or application.

13.7 Entire Agreement; Interpretation; Parol Evidence. This Agreement represents the entire agreement of the parties with respect to its subject matter, and all previous agreements, whether oral or written, entered into prior to this Agreement are hereby revoked and superseded by this Agreement. No representations, warranties, inducements or oral agreements have been made by

any of the parties except as expressly set forth herein, or in any other contemporaneous written agreement executed for the purposes of carrying out the provisions of this Agreement. This Agreement shall be construed and interpreted according to its plain meaning, and no presumption shall be deemed to apply in favor of, or against the party drafting this Agreement. The parties acknowledge and agree that each has had the opportunity to seek and utilize legal counsel in the drafting of, review of, and entry into this Agreement.

13.8 Assignment; Delegation. No right or interest in this Agreement shall be assigned or delegated by Consultant without prior, written permission of the City. Any attempted assignment or delegation by Consultant in violation of this provision shall be a breach of this Agreement by Consultant.

13.9 Subcontracts. No subcontract shall be entered into by the Consultant with any other party to furnish any of the material or services specified herein without the prior written approval of the City. The Consultant is responsible for performance under this Agreement whether or not subcontractors are used. Failure to pay subcontractors in a timely manner pursuant to any subcontract shall be a material breach of this Agreement by Consultant.

13.10 Rights and Remedies. No provision in this Agreement shall be construed, expressly or by implication, as waiver by the City of any existing or future right and/or remedy available by law in the event of any claim of default or breach of this Agreement. The failure of the City to insist upon the strict performance of any term or condition of this Agreement or to exercise or delay the exercise of any right or remedy provided in this Agreement, or by law, or the City's acceptance of and payment for services, shall not release the Consultant from any responsibilities or obligations imposed by this Agreement or by law, and shall not be deemed a waiver of any right of the City to insist upon the strict performance of this Agreement.

13.11 Attorneys' Fees. In the event either party brings any action for any relief, declaratory or otherwise, arising out of this Agreement or on account of any breach or default hereof, the prevailing party shall be entitled to receive from the other party reasonable attorneys' fees and reasonable costs and expenses, determined by the court sitting without a jury, which shall be deemed to have accrued on the commencement of such action and shall be enforced whether or not such action is prosecuted through judgment.

13.12 Liens. All materials or services shall be free of all liens and, if the City requests, a formal release of all liens shall be delivered to the City.

13.13 Offset.

A. Offset for Damages. In addition to all other remedies at law or equity, the City may offset from any money due to the Consultant any amounts Consultant owes to the City for damages resulting from breach or deficiencies in performance or breach of any obligation under this Agreement.

B. Offset for Delinquent Fees or Taxes. The City may offset from any money due to the Consultant any amounts Consultant owes to the City for delinquent fees, transaction privilege taxes and property taxes, including any interest or penalties.

13.14 Notices and Requests. Any notice or other communication required or permitted to be given under this Agreement shall be in writing and shall be deemed to have been duly given if

(A) delivered to the party at the address set forth below, (B) deposited in the U.S. Mail, registered or certified, return receipt requested, to the address set forth below or (C) given to a recognized and reputable overnight delivery service, to the address set forth below:

If to the City: City of Cottonwood
816 N. Main Street
Cottonwood, Arizona 86326
Attn: Purchasing

If to Consultant: Shephard Wesnitzer, Inc.
1756 Villa Drive, Suite C-11
Cottonwood, AZ 86326
Attn: Joe Link

or at such other address, and to the attention of such other person or officer, as any party may designate in writing by notice duly given pursuant to this subsection. Notices shall be deemed received (A) when delivered to the party, (B) three business days after being placed in the U.S. Mail, properly addressed, with sufficient postage or (C) the following business day after being given to a recognized overnight delivery service, with the person giving the notice paying all required charges and instructing the delivery service to deliver on the following business day. If a copy of a notice is also given to a party's counsel or other recipient, the provisions above governing the date on which a notice is deemed to have been received by a party shall mean and refer to the date on which the party, and not its counsel or other recipient to which a copy of the notice may be sent, is deemed to have received the notice.

13.15 Confidentiality of Records. The Consultant shall establish and maintain procedures and controls that are acceptable to the City for the purpose of ensuring that information contained in its records or obtained from the City or from others in carrying out its obligations under this Agreement shall not be used or disclosed by it, its agents, officers, or employees, except as required to perform Consultant's duties under this Agreement. Persons requesting such information should be referred to the City. Consultant also agrees that any information pertaining to individual persons shall not be divulged other than to employees or officers of Consultant as needed for the performance of duties under this Agreement.

13.16 Records and Audit Rights. To ensure that the Consultant and its subcontractors are complying with the warranty under subsection 13.17 below, Consultant's and its subcontractor's books, records, correspondence, accounting procedures and practices, and any other supporting evidence relating to this Agreement, including the papers of any Consultant and its subcontractors' employees who perform any work or services pursuant to this Agreement (all of the foregoing hereinafter referred to as "Records"), shall be open to inspection and subject to audit and/or reproduction during normal working hours by the City, to the extent necessary to adequately permit (A) evaluation and verification of any invoices, payments or claims based on Consultant's and its subcontractors' actual costs (including direct and indirect costs and overhead allocations) incurred, or units expended directly in the performance of work under this Agreement and (B) evaluation of the Consultant's and its subcontractors' compliance with the Arizona employer sanctions laws referenced in subsection 13.17 below. To the extent necessary for the City to audit Records as set forth in this subsection, Consultant and its subcontractors

hereby waive any rights to keep such Records confidential. For the purpose of evaluating or verifying such actual or claimed costs or units expended, the City shall have access to said Records, even if located at its subcontractors' facilities, from the effective date of this Agreement for the duration of the work and until three years after the date of final payment by the City to Consultant pursuant to this Agreement. Consultant and its subcontractors shall provide the City with adequate and appropriate workspace so that the City can conduct audits in compliance with the provisions of this subsection. The City shall give Consultant or its subcontractors reasonable advance notice of intended audits. Consultant shall require its subcontractors to comply with the provisions of this subsection by insertion of the requirements hereof in any subcontract pursuant to this Agreement.

13.17 E-verify Requirements. To the extent applicable under ARIZ. REV. STAT. § 41-4401, the Consultant and its subcontractors warrant compliance with all federal immigration laws and regulations that relate to their employees and their compliance with the E-verify requirements under ARIZ. REV. STAT. § 23-214(A). Consultant's or its subcontractor's failure to comply with such warranty shall be deemed a material breach of this Agreement and may result in the termination of this Agreement by the City.

13.18 Conflicting Terms. In the event of any inconsistency, conflict or ambiguity among the terms of this Agreement, the Scope of Work, any City-approved Purchase Order, the Fee Proposal, and the Consultant's SOQ, the documents shall govern in the order listed herein.

13.19 Non-Exclusive Contract. This Agreement is entered into with the understanding and agreement that it is for the sole convenience of the City. The City reserves the right to obtain like goods and services from another source when necessary.

13.20 Cooperative Purchasing. Specific eligible political subdivisions and nonprofit educational or public health institutions ("Eligible Procurement Unit(s)") are permitted to utilize procurement agreements developed by the City, at their discretion and with the agreement of the awarded Consultant. Consultant may, at its sole discretion, accept orders from Eligible Procurement Unit(s) for the purchase of the Materials and/or Services at the prices and under the terms and conditions of this Agreement, in such quantities and configurations as may be agreed upon between the parties. All cooperative procurements under this Agreement shall be transacted solely between the requesting Eligible Procurement Unit and Consultant. Payment for such purchases will be the sole responsibility of the Eligible Procurement Unit. The exercise of any rights, responsibilities or remedies by the Eligible Procurement Unit shall be the exclusive obligation of such unit. The City assumes no responsibility for payment, performance or any liability or obligation associated with any cooperative procurement under this Agreement. The City shall not be responsible for any disputes arising out of transactions made by others.

[SIGNATURES ON FOLLOWING PAGES]

IN WITNESS WHEREOF, the parties hereto have executed this Agreement as of the date and year first set forth above.

"**City**"

CITY OF COTTONWOOD,
an Arizona municipal corporation

_____
Diane Joens, City of Cottonwood Mayor

ATTEST:

_____
Marianne Jimenez, City Clerk

Approved as to form:

_____
Steve Horton, City Attorney

[SIGNATURES CONTINUE ON FOLLOWING PAGE]

"**Consultant**"

_____
a(n) _____

By:_____

Name:_____

Title:_____

(ACKNOWLEDGMENT)

STATE OF _____)
) ss.
COUNTY OF _____)

On _____, 2016, before me personally appeared _____ _____, the _____ of _____, a(n) _____ _____, whose identity was proven to me on the basis of satisfactory evidence to be the person who he/she claims to be, and acknowledged that he/she signed the above document on behalf of the _____.

_____
Notary Public

(Affix notary seal here)

EXHIBIT A
TO
PROFESSIONAL SERVICES AGREEMENT
BETWEEN
THE CITY OF COTTONWOOD
AND

_____

[Consultant's Resume]

See following pages.

Shephard Wesnitzer, Inc.

1756 E. Villa Drive, Suite C-11
Cottonwood, AZ 86326

928.639-2712
928.639-2713 fax

www.swiaz.com

Engineering an environment of excellence.

Mr. Morgan Scott
City of Cottonwood
1490 W. Mingus Avenue
Cottonwood, AZ 86326

August 12, 2016
SWI No. 16116

Re: Riverfront Water Reclamation Facility Construction Inspector

Mr. Scott,

Thank you for the opportunity to visit the site and review the construction plans and specifications for the Riverfront Water Reclamation Facility. We understand the City is in immediate need of a part time inspector for the next 12 months, which is the anticipated construction duration of the facility.

We can assist the City with construction inspection services, and Mr. Mac Crawford, P.E. would be the primary engineer assigned to the project. Mr. Crawford's design and construction inspection experience for wastewater treatment facilities and solar projects is outlined in the attached resume. Mr. Crawford is uniquely qualified to perform the construction inspection for this project on a day to day, part time basis.

I will also be available to assist Mr. Crawford with inspections and submittals along with, Richard Aldridge, P.E., David Monihan, P.E., S.E, R.L.S., and Arthur Beckwith, P.E. if needed.

Thank you again for the opportunity to submit Mr. Crawford's resume and we look forward to being able to assist the City of Cottonwood with this exciting project. If you have any questions or need more information, please contact our Cottonwood Office at (928) 639-2712.

Sincerely,

Joseph T. Link

Joseph T. Link, P.E.

Cc: File

Shephard Wesnitzer, Inc.

McCULLOUGH (MAC) CRAWFORD, PE

Engineer / Construction Manager

TOTAL YEARS PROFESSIONAL EXPERIENCE: 5

PROFESSIONAL REGISTRATIONS:
Professional Civil Engineer: AZ Registration No. 62490
Safety Trained Supervisor – Construction
Certified Cost Technician
Certified Scheduling Technician

EDUCATION:
Bachelor of Science in Civil Engineering, 2011
Master of Science in Civil Engineering, 2012
University of Colorado – Boulder, CO

SUMMARY OF EXPERIENCE:
Mac Crawford is a registered civil engineer and construction manager with five years of experience designing and building water and wastewater infrastructure. He has experience designing and implementing program and project controls strategies for a variety of size of applications. His previous projects include work on both design and construction management of wet infrastructure delivered through design-build and more traditional methods.

RELEVANT PROFESSIONAL EXPERIENCE:

- **Fort Irwin Capital Improvement Program** – Fort Irwin, California. In support of an own and operate privatization contract with the United States Army provided design and construction services for the maintenance and improvement of the water and wastewater utilities at the National Training Center at Fort Irwin. In addition to construction management and design services for individual projects, provided program controls for the program with an annual budget of approximately $20 million. Individual projects included the construction of new treatment process facilities (aeration basin, hypochlorite dosing facility, and ponds), construction of new distribution and collection network links, and the rehabilitation of existing system assets.
- **Tri-County Wastewater Treatment Plant Expansion** – Clackamas, Oregon. This project expanded the capacity of a major metropolitan wastewater treatment plant to control combined sewer overflow events. Provided field services observing, documenting, and controlling construction activities during the plant expansion. Assisted with the design of flow control structures and process systems to expand the plant capacity to 60 MGD.
- **National Institute of Standards and Technology Boulder Precision Measurement Laboratory** – Boulder, Colorado. This project completed the buildout of a clean room facility for the research of microchip construction, superconducting materials, and quantum standards. Provided quality control and assurance services and safety supervision of field personnel.
- **Commercial Solar Installations** – Greater Denver Area, Colorado. Designed and installed larger solar systems for commercial and governmental clients. Provided system design services and project management / project controls during construction.
- **Quality Control, Construction** – Mr. Crawford has provided quality control for ongoing construction activities in a variety of fields and more recently with a focus on water and wastewater infrastructure.
- **Program and Project Controls** – Cost management, scheduling, and document controls for residential, commercial, and governmental agency projects.

EXHIBIT B
TO
PROFESSIONAL SERVICES AGREEMENT
BETWEEN
THE CITY OF COTTONWOOD
AND
_____

[Scope of Work]

See following pages.

Shephard Wesnitzer, Inc.

1756 E. Villa Drive, Suite C-11
Cottonwood, AZ 86326

928.639-2712
928.639-2713 fax

www.swiaz.com

Engineering an environment of excellence.

Exhibit B – Scope of Services

Ref. No. 16116
August 24, 2016

FOR THE PROJECT: Construction Phase Services
Riverfront Water Reclamation Facility ("PROJECT")
APN: 406-42-018W ("SITE")
Cottonwood, Arizona

1.0 DESCRIPTION OF PROJECT

Information provided by the Client indicates that the Project consists of a new water reclamation facility at the Site.

2.0 PURPOSE

The purpose of our Engineering Services will be to assist the City Project Manager with construction phase services for the facility on a day to day, part time, as needed basis.

3.0 SCOPE OF SERVICES

We propose to provide the following:

Item No.	Description	Fee
1.	**Construction Phase Services:** SWI will assist the City Project Manager with construction phase services for the Project which may include, site meetings, review of 1) shop drawings, 2) test reports, 3) as-built plans, 4) Other construction documents as needed, prepare field inspection/observation reports, and general communication/correspondence. Services will be provided on a time and materials basis, and as directed by the City Project Manager.	Time & Materials

4.0 SCHEDULE

Work will commence upon receipt of a signed copy of this agreement. Coordination with the City Project Manager and Contractor will outline the schedule on an as-needed basis.

5.0 ASSUMPTIONS

1. Construction documents will be provided by the Client.
2. Two sets of keys to the construction entrance will be provided by the contractor or the Client.
3. Normal business hours will be Monday through Thursday, 6 a.m. to 6 p.m.
4. Work outside normal business hours, or exceeding 40 hours a week, will be performed and charged at 1 ½ times the hourly rate only if approved by the City Project Manager.

6.0 MANNER OF PAYMENT

Billing for work in progress will be made on a monthly basis. Payment is due upon receipt of monthly billings. Late fees at the rate of 2% interest on balance owed will be assessed to client for delays in payments in excess of 30 days from the date of invoice. Services will be halted due to delays in payment. Final revisions to calculations and drawings will be released upon receipt of final payment.

7.0 FEES

The cost for Scope of Services Items will be performed on a time and materials basis. It is anticipated that a majority of the estimated work (20 hours per week) will be performed and billed at an Engineer 1, E-1 rate of $110.00/hour. E-2 through E-5 rates may be charged for appropriate staff if approved by the City Project Manager. Costs for Reimbursable expenses include mileage from the Cottonwood Office, FedEx charges, drawing plots and plan reproduction costs will be billed at cost plus 10%. Any additional work which may be indicated by the discovery of unanticipated conditions in the field or revisions to the site plans instigated by others will be performed, only upon your authorization, in accordance with our current Standard Rate Schedule. Current Standard Rate Schedule is subject to change as the current calendar year expires.

8.0 SERVICES NOT INCLUDED

Engineering design, Surveying, Cost Control and Estimates, Scheduling, Document Controls and Meeting Minutes, environmental studies, archeological studies, traffic analysis, lighting plans, record drawings, construction staking or any other work not specifically identified in Section 3.0, Scope of Services. All agency and/or permitting fees are to be paid by the Client.

EXHIBIT C
TO
PROFESSIONAL SERVICES AGREEMENT
BETWEEN
THE CITY OF COTTONWOOD
AND

_____

[Fee Proposal]

See following page.

Ref. No. 16116

Exhibit C

SHEPHARD-WESNITZER, INC. - 2016 HOURLY RATES

STANDARD RATE SCHEDULE

E-5	ENGINEER 5	$165/HOUR
E-4	ENGINEER 4	$155/HOUR
E-3	ENGINEER 3	$135/HOUR
E-2	ENGINEER 2	$120/HOUR
E-1	ENGINEER 1	$110/HOUR
EIT-4	ENGINEER IN TRAINING	$105/HOUR
EIT-3	ENGINEER IN TRAINING	$100/HOUR
EIT-2	ENGINEER IN TRAINING	$95/HOUR
EIT-1	ENGINEER IN TRAINING	$90/HOUR
CADD-4	CADD DESIGNER	$100/HOUR
CADD-3	CADD DESIGNER	$95/HOUR
CADD-2	CADD DESIGNER	$80/HOUR
CADD-1	CADD DESIGNER	$60/HOUR
CAD-4	CAD DRAFTER	$80/HOUR
CAD-3	CAD DRAFTER	$70/HOUR
CAD-2	CAD DRAFTER	$60/HOUR
CAD-1	CAD DRAFTER	$50/HOUR
A-1	CLERICAL	$60/HOUR
RLS	REGISTERED LAND SURVEYOR, PROJECT MANAGER	$130/HOUR
RLSPC	REGISTERED LAND SURVEYOR, PARTY CHIEF	$110/HOUR
LSIT	LAND SURVEYOR IN TRAINING, PARTY CHIEF	$85/HOUR
NRL	NON-REGISTERED LAND SURVEYOR, PARTY CHIEF	$90/HOUR
T-4	CONSTRUCTION INSPECTION TECHNICIAN	$105/HOUR
T-3	PROJECT COORDINATOR	$90/HOUR
INT -1	INTERN	$45/HOUR
	MARKETING DIRECTOR	$60/HOUR
	GIS COORDINATOR	$95/HOUR
	INSTRUMENT PERSON	$80/HOUR
	GPS RECEIVER	$30/HOUR PER RECEIVER
	ROBOTIC TOTAL STATION	$25/HOUR
	ARCHIVE FILE RESEARCH	$60/HOUR, 1 HOUR MINIMUM

OUTSIDE SERVICES.....COST + 10%

PRINTS

BOND	$2.75EACH
VELLUMS	$5.00EACH
MYLAR	$6.00EACH

PLOTS

BOND	$5.00EACH
VELLUM	$10.00EACH
MYLAR	$10.00EACH
COLOR PLOTS/BOND	$15.00EACH
XEROX	$.09EACH
CD'S	$5.00EACH
MILEAGE	$.65 PER MILE

FOR ANY AND ALL SERVICES RELATED TO LITIGATION OR OTHER LEGAL PROCEEDINGS
TWO TIMES OUR STANDARD RATES

WORK OUTSIDE NORMAL BUSINESS HOURS WILL BE CHARGED AT 1½ TIMES HOURLY RATE. PAYMENT IS DUE UPON RECEIPT OF MONTHLY BILLINGS AND INVOICES ARE DELINQUENT THIRTY (30) DAYS AFTER DATE OF INVOICE. WORK IN PROGRESS WILL BE BILLED MONTHLY FOR PORTIONS COMPLETED AND UPON JOB COMPLETION FOR FINAL BALANCE. IF PAYMENTS ARE NOT MADE IN FULL PRIOR TO DELINQUENCY, THE CLIENT AGREES TO PAY INTEREST ON THE UNPAID AMOUNT AT THE RATE OF 2% PER MONTH FROM DELINQUENCY DATE. ALL PAYMENTS RECEIVED SHALL FIRST BE CREDITED TO PAYMENT OF INTEREST, AND THEN TO THE PRINCIPAL BALANCE

City of Cottonwood, Arizona
City Council Agenda Communication

Print

Meeting Date:	September 6, 2016
Subject:	Proposed Reimbursement/Cooperation Agreement for Improvement of the Alley between Pinal and Pima Streets and Main and Cactus Streets
Department:	Development Services
From:	Morgan Scott, Development Services Manager

REQUESTED ACTION

Approval of a proposed reimbursement/cooperation agreement to improve the alley between Pinal and Pima Streets and Main and Cactus Streets.

SUGGESTED MOTION

If the Council desires to approve this item the suggested motion is:

"I move to approve the proposed reimbursement/cooperation agreement for the improvement of the alley between Pinal and Pima Streets and Main and Cactus Streets."

BACKGROUND

Two separate developments are moving forward in the Old Town District: La Main and the expansion of the Tavern Hotel. The projects are proposing to utilize the alley between Pinal and Pima Streets and Main and Cactus Streets for access, and both are being required as a condition of approval of those developments to improve the alley. The Developers and City staff have developed a proposed reimbursement/cooperative agreement to provide for improvement to the alley in a manner that will serve both developments, as well as other impacted property owners.

Attached is a proposed agreement which would require the City to design the improvements (which is currently planned to be done in-house) and administration of the contract for construction of those improvements; while the developers would bear the costs of construction. Attached is a map of the area.

JUSTIFICATION/BENEFITS/ISSUES

The agreement will allow both developments to share in the cost of improving the alley, while the City will design and oversee the construction of the improvements and coordinate among all impacted stakeholders.

COST/FUNDING SOURCE

Design of the improvements (which is currently planned to be performed in-house by City staff) and construction/contract administration will be handled by the City. Construction costs will be split by the developers.

ATTACHMENTS:		
Name:	Description:	Type:
9-6-16_LaMain_Corrected_Agreement.doc	LaMain Alley Reconstruction Agreement	Cover Memo
agreement_image__8-8-16.docx	Agreement Image	Cover Memo

REIMBURSEMENT AGREEMENT
BETWEEN
THE CITY OF COTTONWOOD,
LAMAIN 919, LLC
AND
JEROME PROPERTIES, L.L.C.

THIS REIMBURSEMENT AGREEMENT (this "Agreement") is entered into as of _____, 2016, between the City of Cottonwood, an Arizona municipal corporation (the "City"), LaMain 919, LLC, an Arizona limited liability company ("LaMain"), and Jerome Properties, L.L.C., an Arizona limited liability company ("Jerome") (Jerome and LaMain are referred to herein individually as an "Owner" and collectively as the "Owners"). The City and the Owners are referred to herein individually as a "Party" and collectively as the "Parties."

RECITALS

A. The City intends to design an alley between Main Street and Cactus Street and from Pinal Street to the south property line of Parcel No. 406-22-013, also known as the Tavern Grille, 914 North Main Street in Cottonwood, Arizona (the "Project"). Because of the shared benefits to the City and the Owners resulting from the Project, the Parties have agreed to share in the Project costs. Accordingly, the City shall be responsible for (i) procuring a contractor and administering the construction of the Project and (ii) paying for all costs associated with the Project design, engineering, procurement and construction administration (the "Design Costs"). The Owners shall be responsible for all costs associated with construction of the project (the "Construction Costs").

AGREEMENT

NOW, THEREFORE, in consideration of the foregoing introduction and recitals, which are incorporated herein by reference, the following mutual covenants and conditions, and other good and valuable consideration, the receipt and sufficiency of which are hereby acknowledged, the City and the Owner hereby agree as follows:

1. City Obligations.

1.1 Project Design. The City shall be solely responsible for ensuring completion of the Design Documents to a construction-ready state.

1.2 Contractor Procurement. Upon completion of the Design Documents, the City shall issue an invitation for bids in compliance with ARIZ. REV. STAT. § 34-201 *et seq*. and shall select the contractor submitting the lowest qualified bid to complete construction of the Project. Subject to the Owners' responsibilities for payment as set forth below, the City shall award the contract and enter into an agreement for construction of the Project.

1.3 Contract Administration; Construction Management. The City shall, throughout the duration of the Project, provide contract administration and construction

management oversight for the Project. The Owners agree and understand that the City shall have the sole authority for contract administration and construction management.

2. Owners' Responsibilities. After the City determines the lowest qualified bid, but prior to awarding the contract for the Project, the City shall notify the Owners of the bid amount. The Owners each shall have 10 days following notice from the City to examine the winning bid and to pay to the City 55% of the bid amount (the "Anticipated Construction Cost").

3. Change Orders. Change orders above 110% of the low bid and related to the Project must be approved by the City and the Owner. Such approvals shall not be unreasonably withheld; change orders that are not rejected or approved by the Owners within 10 days of notice from the City shall be deemed approved. If the Owners reject any such change order, such rejection shall be accompanied by a written statement specifying and explaining the Owners' reasons for rejecting such change order. If the Owners reject a change order that the City deems necessary to adequately complete the Project, the Owner's shall provide an alternate to the change order in a form deemed acceptable to the City. If Owners do not provide an acceptable alternative within 15 days following the change order notice from the City, the change order proposed by the City shall be deemed approved with no further action by the Parties.

4. Reconciliation. Upon completion of the Project, the City shall reconcile the Anticipated Construction Cost against the Project records, including all approved change orders, to determine the Final Construction Cost. If the Final Construction Cost exceeds the Anticipated Construction Cost (a "Cost Overrun"), the Owners shall, within 10 days after notice from the City, each pay the City 50% of the Cost Overrun to the City. If the Final Construction Cost is less than the Anticipated Construction Cost (a "Cost Savings"), the City shall reimburse 50% of the Cost Savings to each Owner.

5. Payment Not a Debt. The City's obligations pursuant to the provisions of this Agreement that require the expenditure of funds do not constitute a general obligation or indebtedness of the City within the meaning of any constitutional or statutory debt limitation or restriction, and do not obligate the City to make any expenditure from proceeds of ad valorem taxes or obligations to which any general taxing authority is pledged unless the expenditure has been duly budgeted, if and to the extent required by law, and is within all budget and expenditure limitations of, and is not in conflict with, the Constitution or laws of the State of Arizona. The City's failure to annually appropriate any amounts necessary to meet its obligations under this Agreement shall not diminish the Owner's rights to assert claims for such payments.

6. Default. If either Party fails to perform any obligation pursuant to this Agreement, and such Party fails to cure its nonperformance within 30 days after notice of nonperformance is given by the non-defaulting Party, such Party will be in default of this Agreement. In the event of such default, the non-defaulting Party may terminate this Agreement and shall have all remedies that are available to it at law or in equity including, without limitation, the remedy of specific performance. If the nature of the defaulting Party's nonperformance is such that it cannot reasonably be cured within 30 days, then the defaulting Party will have such additional periods of time as may be reasonably necessary under the circumstances, provided the defaulting Party immediately commences to cure its

nonperformance and thereafter diligently continues to completion the cure of its nonperformance. In no event shall any such cure period exceed 60 days.

7. Notices and Requests. Any notice or other communication required or permitted to be given under this Agreement shall be in writing and shall be deemed to have been duly given if (i) delivered to the Party at the address set forth below, (ii) deposited in the U.S. Mail, registered or certified, return receipt requested, to the address set forth below or (iii) given to a recognized and reputable overnight delivery service, to the address set forth below:

If to the City:	City of Cottonwood 824 North Main Street Cottonwood, Arizona 86326 Attn: Doug Bartosh, City Manager
With a copy to:	City of Cottonwood 824 N. Main Street Cottonwood, Arizona 86326 Attn: Steven B. Horton, City Attorney
If to the Owner:	LaMain 919, LLC 10008 East South Bend Drive Scottsdale, Arizona 85255-2540 Attn: John C. Haupt
	Jerome Properties, L.L.C. P.O. Box 896 Jerome, Arizona 86331 Attn: Eric Jurisin and Michelle Jurisin

or at such other address, and to the attention of such other person or officer as any Party may designate in writing by notice duly given pursuant to this Section. Notices shall be deemed received (i) when delivered to the Party, (ii) three business days after being placed in the U.S. Mail, properly addressed, with sufficient postage or (iii) the following business day after being given to a recognized overnight delivery service, with the person giving the notice paying all required charges and instructing the delivery service to deliver on the following business day. If a copy of a notice is also given to a Party's counsel or other recipient, the provisions above governing the date on which a notice is deemed to have been received by a Party shall mean and refer to the date on which the Party, and not its counsel or other recipient to which a copy of the notice may be sent, is deemed to have received the notice.

8. Waiver. No delay in exercising any right or remedy shall constitute a waiver thereof, and no waiver by the City or the Owner of the breach of any covenant of this Agreement shall be construed as a waiver of any preceding or succeeding breach of the same or any other covenant or condition of this Agreement.

9. Attorneys' Fees. In the event either Party finds it necessary to bring any action at law or other proceeding against the other Party to enforce any of the terms, covenants or

conditions hereof, or by reason of any breach or default hereunder, the Party prevailing in such action or other proceeding shall be paid all reasonable costs and reasonable attorneys' fees by the other Party and, in the event any judgment is secured by said prevailing Party, all such costs and attorneys' fees shall be included therein, such fees to be set by the court and not by jury.

10. Counterparts. This Agreement may be executed in two or more counterparts, each of which shall be deemed an original, but all of which together shall constitute one and the same instrument. The signature pages from one or more counterparts may be removed from such counterparts and such signature pages all attached to a single instrument so that the signatures of all Parties may be physically attached to a single document.

11. Headings. The descriptive headings of the sections of this Agreement are inserted for convenience only and shall not control or affect the meaning or construction of any of the provisions hereof.

12. Further Acts. Each of the Parties hereto shall execute and deliver all such documents and perform all such acts as reasonably necessary, from time to time, to carry out the matters contemplated by this Agreement.

13. Time is of the Essence. Time is of the essence in this Agreement.

14. Assignment. This Agreement may be assigned, in whole or in part, by the Owner only upon the prior written approval of the City, as evidenced by the City Manager's signature thereon, which approval shall not be unreasonably withheld by the City.

15. Entire Agreement. This Agreement constitutes the entire Agreement between the Parties hereto pertaining to the subject matter hereof. All prior and contemporaneous agreements, representations and understandings of the Parties, oral or written, are hereby superseded and merged herein.

16. Amendment. No amendment or waiver of any provision in this Agreement will be binding (i) on the City unless and until it has been approved by the City Council and has become effective or (ii) on the Owner unless and until it has been executed by an authorized representative.

17. Governing Law. This Agreement is entered into in Arizona and shall be construed and interpreted under the laws of the State of Arizona.

18. Severability. Each provision of this Agreement is deemed to be valid and will be enforced to the extent permitted by law. However, if any provision in this Agreement (or the application of the same) is, to any extent, found to be invalid or unenforceable by a court of competent jurisdiction, the remainder of this Agreement (or the application of that provision to circumstances other than those to which it is found to be invalid or unenforceable) will not be affected by that judicial determination of invalidity or unenforceability, if the remaining provisions permit the Parties to achieve the practical and proportional benefits and obligations contemplated by this Agreement. If that is not the case, the Parties agree to negotiate in good

faith for such amendments to this Agreement as may be necessary to achieve the full intent of those mutual benefits and obligations herein contemplated.

19. Covenant of Good Faith. In exercising their rights and in performing their obligations pursuant to this Agreement, the Parties will cooperate with one another in good faith to ensure the intent of this Agreement can be attained.

20. Conflict of Interest. This Agreement may be cancelled by the City pursuant to ARIZ. REV. STAT. § 38-511.

[SIGNATURES ON FOLLOWING PAGES]

IN WITNESS WHEREOF, the Parties hereto have executed this Agreement as of the date and year first set forth above.

"**City**"

CITY OF COTTONWOOD,
an Arizona municipal corporation

_____
Doug Bartosh, City Manager

ATTEST:

_____
Marianne Jiménez, City Clerk

APPROVED AS TO FORM:

_____
Steven B. Horton, City Attorney

(ACKNOWLEDGMENT)

STATE OF ARIZONA)
) ss.
COUNTY OF YAVAPAI)

On _____, 2016, before me personally appeared Doug Bartosh, the City Manager of the CITY OF COTTONWOOD, an Arizona municipal corporation, whose identity was proven to me on the basis of satisfactory evidence to be the person who he claims to be, and acknowledged that he signed the above document, on behalf of the City of Cottonwood.

_____
Notary Public

(Affix notary seal here)

[SIGNATURES CONTINUE ON FOLLOWING PAGES]

"**Owner**"

LAMAIN 919, LLC,
an Arizona limited liability company

By: _____
John C. Haupt, Manager

(ACKNOWLEDGMENT)

STATE OF ARIZONA)
) ss.
COUNTY OF MARICOPA)

On _____, 2016, before me personally appeared John C. Haupt, the Manager of LAMAIN 919, LLC, an Arizona limited liability company, whose identity was proven to me on the basis of satisfactory evidence to be the person who he/she claims to be, and acknowledged that he/she signed the above document on behalf of the limited liability company.

_____
Notary Public

(Affix notary seal here)

[SIGNATURES CONTINUE ON FOLLOWING PAGES]

"**Owner**"

JEROME PROPERTIES, L.L.C.,
an Arizona limited liability company

By: _____
Eric Jurisin, Member

(ACKNOWLEDGMENT)

STATE OF ARIZONA)
) ss.
COUNTY OF YAVAPAI)

On _____, 2016, before me personally appeared Eric Jurisin, the Member of JEROME PROPERTIES, L.L.C., an Arizona limited liability company, whose identity was proven to me on the basis of satisfactory evidence to be the person who he claims to be, and acknowledged that he signed the above document on behalf of the limited liability company.

_____
Notary Public

(Affix notary seal here)

[SIGNATURES CONTINUE ON FOLLOWING PAGE]

"**Owner**"

JEROME PROPERTIES, L.L.C.,
an Arizona limited liability company

By: _____
Michelle Jurisin, Member

(ACKNOWLEDGMENT)

STATE OF ARIZONA)
) ss.
COUNTY OF YAVAPAI)

On _____, 2016, before me personally appeared Michelle Jurisin, the Member of JEROME PROPERTIES, L.L.C., an Arizona limited liability company, whose identity was proven to me on the basis of satisfactory evidence to be the person who she claims to be, and acknowledged that she signed the above document on behalf of the limited liability company.

_____
Notary Public

(Affix notary seal here)

W Pinal St
930 N Main St
928 N Main St
925 N Cactus St
La Main
Alley
924 N Main St
920 N Main St
La Main
921 N Cactus St
918 N Main St Unit C
N Cactus St
Tavern Hotel
918 N Main St Unit B
919 N Cactus St
918 N Main St Unit A
N Main St
914 N Main St
911 N Cactus St
909 N Cactus St
N
POWERED BY

City of Cottonwood, Arizona
City Council Agenda Communication

Print

Meeting Date:	September 6, 2016
Subject:	Airport Apron Reconstruction Grant Agreement
Department:	Development Services
From:	Morgan Scott, Development Services Manager

REQUESTED ACTION

Acceptance and approval of a grant and grant agreement with the Federal Aviation Administration (FAA) for reconstruction of a portion of the airport apron and authorize the Airport Manager to execute the agreement.

SUGGESTED MOTION

If the Council desires to approve this item the suggested motion is:

"I move to accept and approve the proposed grant agreement with the Federal Aviation Administration (FAA) for reconstruction of a portion of the airport apron and authorize the Airport Manager to execute the agreement."

BACKGROUND

The Airport Apron is approaching the end useful lifespan. In August of 2014, ADOT conducted a study and produced a Pavement Management Report for the City of Cottonwood Airport. The FAA agreed to fund of 91.06% of the project with the State and the City splitting the remainder of the costs. The City proceeded with the design of the reconstruction of the apron. Due to limited funding the project was split into five phases and multiple fiscal years. Based on the bids that were received on June 1st, 2016 the FAA has approved enough funding to complete the first two phases this year. Below and attached are a breakout and map of the phases of this project.

Phase	Name	Approximate Cost
1	Base Bid	$599,850.5
2	Alternate 1	$317,644.5
3	Alternate 2	$469,841

4	Alternate 3	$271,463
5	Alternate 4	$404,096
	TOTAL	$2,062,895

The FAA has awarded the City a grant to complete the base bid and Alternate #1 this year.

JUSTIFICATION/BENEFITS/ISSUES

The City will need to match the grant 4.47% of the overall cost. The State will also match 4.47% and the FAA will supply 91.06% of the construction costs.

COST/FUNDING SOURCE

The City's share will be funded by airport revenues and the general fund.

ATTACHMENTS:

Name:	Description:	Type:
9-6-16_FAA_Grant_Letter.pdf	FAA Grant Letter	Cover Memo
SIGNED_FAA_AIP_Grant_Application_-_P52_Construct_Apron_Reconstruction_(Dec__2015).pdf	Grant Application	Cover Memo
Phasing_Plan.pdf	Phasing Plan	Cover Memo
res2852.docx	Resolution 2852	Cover Memo

U.S. Department
of Transportation
Federal Aviation Administration

Western-Pacific Region
Airports Division
Phoenix Airports District Office

3800 N. Central Avenue
Suite 1025, 10th Floor
Phoenix, AZ 85012

August 5, 2016

Morgan Scott
City of Cottonwood
1490 W Mingus Ave
Cottonwood, AZ 86326

Dear Mr. Scott:

This letter approves an extension to the required date of execution for the Grant Offer for Airport Improvement Program (AIP) Project No. 3-04-0012-017-2016 in Cottonwood, Arizona. This is to accommodate your council schedule and in accordance with your request. This letter outlines expectations for success. Please read the conditions and assurances carefully.

To properly enter into this agreement, you must do the following:

a. The governing body must provide authority to execute the grant to the individual signing the grant; i.e. the sponsor's authorized representative.

b. The sponsor's authorized representative must execute the grant, followed by the attorney's certification, no later than **September 8, 2016**, in order for the grant to be valid. The date of the attorney's signature must be on or after the date of the sponsor's authorized representative's signature.

c. You may not make any modification to the text, terms or conditions of the grant offer.

d. After you properly execute the grant agreement:
   - Return one executed Grant Agreement to our office via US mail or commercial courier.
   - Retain the copy marked for your records.
   - Because time is now critical for entering the executed grant into the FAA system, we request you send a copy of the signed agreement to our office by facsimile or email (pdf document) prior to sending the hardcopy document through U.S. mail or commercial courier. Please scan and e-mail a copy to Tim.Morrison@faa.gov to expedite processing.

Subject to the requirements in 2 CFR §200.305, each payment request for reimbursement under this grant must be made electronically via the Delphi eInvoicing System. Please see the attached Grant Agreement for more information regarding the use of this System.

Please note Grant Condition No. 4 requires you to complete the project without undue delay. We will be paying close attention to your progress to ensure proper stewardship of these Federal

funds. **You are expected to submit payment requests for reimbursement of allowable incurred project expenses in accordance with project progress.** Should you fail to make draws on a regular basis, your grant may be placed in "inactive" status which will impact future grant offers.

Until the grant is completed and closed, you are responsible for submitting formal reports as follows:

- A signed/dated SF-270 (non-construction projects) or SF-271 or equivalent (construction projects) and SF-425 annually, due 90 days after the end of each federal fiscal year in which this grant is open (due December 31 of each year this grant is open); and
- Performance Reports are due within 30 days of the end of a reporting period as follows:
    1. Non-construction project: Due annually at end of the Federal fiscal year.
    2. Construction project: Submit FAA form 5370-1, Construction Progress and Inspection Report at the end of each fiscal quarter.

As a condition of receiving Federal assistance under this award, you must comply with audit requirements as established under 2 CFR part 200. Subpart F requires non-Federal entities that expend $750,000 or more in Federal awards to conduct a single or program specific audit for that year. Note that this includes Federal expenditures made under other Federal-assistance programs. Please take appropriate and necessary action to assure your organization will comply with applicable audit requirements and standards.

Once the project(s) is completed and all costs are determined, we ask that you close the project without delay and submit the final closeout report documentation as required by your Airports District Office.

Tim Morrison, (602) 792-1069, is the assigned program manager for this grant and is readily available to assist you and your designated representative with the requirements stated herein. We sincerely value your cooperation in these efforts and look forward to working with you to complete this important project.

Sincerely,

Mike N. Williams
Manager
Phoenix Airports District Office

CONDITIONS

1. **Maximum Obligation.** The maximum obligation of the United States payable under this Offer is $962,954.

   The following amounts represent a breakdown of the maximum obligation for the purpose of establishing allowable amounts for any future grant amendment, which may increase the foregoing maximum obligation of the United States under the provisions of 49 U.S.C. § 47108(b):

   $0 for planning
   $962,954 for airport development or noise program implementation
   $0 for land acquisition.
   The source of this Grant may include funding from the Small Airport Fund.

2. **Period of Performance.** The period of performance begins on the date the Sponsor formally accepts this agreement. Unless explicitly stated otherwise in an amendment from the FAA, the end date of the project period of performance is 4 years (1,460 calendar days) from the date of formal grant acceptance by the Sponsor.

   The Sponsor may only charge allowable costs for obligations incurred prior to the end date of the period of performance (2 CFR § 200.309). Unless the FAA authorizes a written extension, the sponsor must submit all project closeout documentation and liquidate (pay off) all obligations incurred under this award no later than 90 calendar days after the end date of the period of performance (2 CFR § 200.343).

   The period of performance end date does not relieve or reduce Sponsor obligations and assurances that extend beyond the closeout of a grant agreement.

3. **Ineligible or Unallowable Costs.** The Sponsor must not include any costs in the project that the FAA has determined to be ineligible or unallowable.

4. **Indirect Costs – Sponsor.** Sponsor may charge indirect costs under this award by applying the indirect cost rate identified in the project application and as accepted by the FAA to allowable costs for Sponsor direct salaries and wages.

5. **Determining the Final Federal Share of Costs.** The United States' share of allowable project costs will be made in accordance with the regulations, policies and procedures of the Secretary. Final determination of the United States' share will be based upon the final audit of the total amount of allowable project costs and settlement will be made for any upward or downward adjustments to the Federal share of costs.

6. **Completing the Project Without Delay and in Conformance with Requirements.** The Sponsor must carry out and complete the project without undue delays and in accordance with this agreement, and the regulations, policies and procedures of the Secretary. The Sponsor also agrees to comply with the assurances which are part of this agreement.

7. **Amendments or Withdrawals before Grant Acceptance.** The FAA reserves the right to amend or withdraw this offer at any time prior to its acceptance by the Sponsor.

8. **Offer Expiration Date.** This offer will expire and the United States will not be obligated to pay any part of the costs of the project unless this offer has been accepted by the Sponsor on or before September 8, 2016, or such subsequent date as may be prescribed in writing by the FAA.

9. **Improper Use of Federal Funds.** The Sponsor must take all steps, including litigation if necessary, to recover Federal funds spent fraudulently, wastefully, or in violation of Federal antitrust statutes, or misused in any other manner in any project upon which Federal funds have been expended. For the purposes of this grant agreement, the term "Federal funds" means funds however used or dispersed by the Sponsor that were originally paid pursuant to this or any other Federal grant agreement. The Sponsor must obtain the approval of the Secretary as to any determination of the amount of the Federal share of

AIP Grant Application Checklist

AIRPORT NAME: (P52) Cottonwood Airport **DATE:** 2-23-16

SYSTEM FOR AWARD MANAGEMENT (SAM) CAGE CODE #: 4HTE7

SYSTEM FOR AWARD MANAGEMENT (SAM) EXPIRATION DATE: April 22, 2016

This checklist (and attached instructions) is a tool to assist a grantee (airport sponsor) in identifying the requirements and considerations associated with preparing an Airport Improvement Program (AIP) grant application package for submittal to the FAA. Airport sponsors should read and consider each of the items carefully. **Some of the items can be answered by simply checking the "Yes" and "No" boxes while others require providing additional information as part of the airport's request for AIP funds.**

Ref.		Yes	No	N/A	Comments Attached
ITEMS REQUIRED TO COMPLETE APPLICATION REVIEW:					
1.	Standard Form 424 *(signed)*	✓			
2.	Project Cost Breakdown *(attached)*	✓			
3.	Project Sketch *(at the request of the ADO)*	✓			
4.	Project Narrative *(attached or within Form 5100-11/101 Part IV)*	✓			
5.	Form 5100-100 (parts II - IV) *(airport development grants)* Form 5100-101 (parts II - IV) *(planning grants)*	✓			
6.	Bid Tabulations/Negotiated Amounts *(attached or previously submitted to the ADO)*				✓ (Part III - Section E - Remarks)
7.	Exhibit A *(attached or previously submitted to the ADO)*	✓			
8.	Title Certificate or Long Term Lease Agreement *(at the request of the ADO)*			✓	

FEDERAL AVIATION ADMINISTRATION

AIRPORT IMPROVEMENT PROGRAM

APPLICATION

FOR

THE WORK

OF

CONSTRUCT APRON RECONSTRUCTION

AT

(P52) COTTONWOOD AIRPORT
City of Cottonwood, AZ

December 2015

OMB Number: 4040-0004
Expiration Date: 08/31/2016

Application for Federal Assistance SF-424

* 1. Type of Submission	* 2. Type of Application	* If Revision, select appropriate letter(s):
☐ Preapplication	☒ New	- Select One -
☒ Application	☐ Continuation	* Other (Specify)
☐ Changed/Corrected Application	☐ Revision	

* 3. Date Received:

4. Application Identifier: P52

5a. Federal Entity Identifier: 3-04-0012

* 5b. Federal Award Identifier:

State Use Only:

6. Date Received by State:

7. State Application Identifier:

8. APPLICANT INFORMATION:

* a. Legal Name: City of Cottonwood

* b. Employer/Taxpayer Identification Number (EIN/TIN): 86-6007877

*c. Organizational DUNS: 100838775

d. Address:

* Street1: 1490 West Mingus Avenue
Street 2:
* City: Cottonwood
County: Yavapai
* State: Arizona
Province:
Country: United States
*Zip/ Postal Code: 86326

e. Organizational Unit:

Department Name: Public Works Department

Division Name:

f. Name and contact information of person to be contacted on matters involving this application:

Prefix: Mr.
First Name: Morgan
Middle Name:
* Last Name: Scott
Suffix:

Title: Development Services Operations Manager

Organizational Affiliation: City of Cottonwood

* Telephone Number: (928) 340-2777
Fax Number: (928) 634-7285

* Email: mscott@cottonwoodaz.gov

OMB Number: 4040-0004
Expiration Date: 08/31/2016

Application for Federal Assistance SF-424

*9. Type of Applicant 1: Select Applicant Type:

C. City or Township Government

Type of Applicant 2: Select Applicant Type:

- Select One -

Type of Applicant 3: Select Applicant Type:

- Select One -

* Other (specify):

* 10. Name of Federal Agency:
Federal Aviation Administration

11. Catalog of Federal Domestic Assistance Number:

20.106

CFDA Title:

Airport Improvement Program

*12. Funding Opportunity Number: N/A

Title:

13. Competition Identification Number: N/A

Title:

14. Areas Affected by Project (Cities, Counties, States, etc.):

City of Cottonwood, Yavapai County, Arizona

* 15. Descriptive Title of Applicant's Project:

Construct Apron Reconstruction Project

Attach supporting documents as specified in agency instructions.

OMB Number: 4040-0004
Expiration Date: 08/31/2016

Application for Federal Assistance SF-424

16. Congressional Districts Of:

*a. Applicant: AZ 3rd

*b. Program/Project: AZ 3rd

Attach an additional list of Program/Project Congressional Districts if needed.

17. Proposed Project:

*a. Start Date: 06/01/2016

*b. End Date: 11/01/2016

18. Estimated Funding ($):

*a. Federal	3,096,040.00
*b. Applicant	151,980.00
*c. State	151,980.00
*d. Local	
*e. Other	
*f. Program Income	
*g. TOTAL	3,400,000.00

***19. Is Application Subject to Review By State Under Executive Order 12372 Process?**

☐ a. This application was made available to the State under the Executive Order 12372 Process for review on _____

☒ b. Program is subject to E.O. 12372 but has not been selected by the State for review.

☐ c. Program is not covered by E.O. 12372

***20. Is the Applicant Delinquent On Any Federal Debt? (If "Yes", provide explanation on next page.)**

☐ Yes ☒ No

21. *By signing this application, I certify (1) to the statements contained in the list of certifications** and (2) that the statements herein are true, complete and accurate to the best of my knowledge. I also provide the required assurances** and agree to comply with any resulting terms if I accept an award. I am aware that any false, fictitious, or fraudulent statements or claims may subject me to criminal, civil, or administrative penalties. (U.S. Code, Title 218, Section 1001)

☑ ** I AGREE

** The list of certifications and assurances, or an internet site where you may obtain this list, is contained in the announcement or agency specific instructions.

Authorized Representative:

Prefix: Mr.

*First Name: Morgan

Middle Name:

*Last Name: Scott

Suffix:

*Title: Development Services Operations Manager

*Telephone Number: (928) 340-2777

Fax Number: (928) 634-7285

* Email: mscott@cottonwoodaz.gov

*Signature of Authorized Representative:

*Date Signed:

Application for Federal Assistance SF-424

*Applicant Federal Debt Delinquency Explanation

The following field should contain an explanation if the Applicant organization is delinquent on any Federal Debt. Maximum number of characters that can be entered is 4,000. Try and avoid extra spaces and carriage returns to maximize the availability of space.

N/A

Application for Federal Assistance (Development Projects)

PART II – PROJECT APPROVAL INFORMATION

SECTION A	
Item 1. Does this assistance request require State, local, regional, or other priority rating? ☐ Yes ☑ No	Name of Governing Body: Priority:
Item 2. Does this assistance request require State, or local advisory, educational or health clearances? ☐ Yes ☑ No	Name of Agency or Board: (Attach Documentation)
Item 3. Does this assistance request require clearinghouse review in accordance with OMB Circular A-95? ☐ Yes ☑ No	(Attach Comments)
Item 4. Does this assistance request require State, local, regional, or other planning approval? ☐ Yes ☑ No	Name of Approving Agency: Date:
Item 5. Is the proposal project covered by an approved comprehensive plan? ☑ Yes ☐ No	Check one: State ☐ Local ☑ Regional ☐ Location of Plan: Cottonwood Airport Master Plan
Item 6. Will the assistance requested serve a Federal installation? ☐ Yes ☑ No	Name of Federal Installation: Federal Population benefiting from Project:
Item 7. Will the assistance requested be on Federal land or installation? ☐ Yes ☑ No	Name of Federal Installation: Location of Federal Land: Percent of Project: %
Item 8. Will the assistance requested have an impact or effect on the environment? ☐ Yes ☑ No	(See instructions for additional information to be provided.)
Item 9. Will the assistance requested cause the displacement of individuals, families, businesses, or farms? ☐ Yes ☑ No	Number of: Individuals: Families: Businesses: Farms:
Item 10. Is there other related Federal assistance on this project previous, pending, or anticipated? ☐ Yes ☑ No	(See instructions for additional information to be provided.)

PART II – SECTION C

The Sponsor hereby represents and certifies as follows:

1. Compatible Land Use – The Sponsor has taken the following actions to assure compatible usage of land adjacent to or in the vicinity of the airport:

None

2. Defaults – The Sponsor is not in default on any obligation to the United States or any agency of the United States Government relative to the development, operation, or maintenance of any airport, except as stated herewith:

None

3. Possible Disabilities – There are no facts or circumstances (including the existence of effective or proposed leases, use agreements or other legal instruments affecting use of the Airport or the existence of pending litigation or other legal proceedings) which in reasonable probability might make it impossible for the Sponsor to carry out and complete the Project or carry out the provisions of the Grant Assurances, either by limiting its legal or financial ability or otherwise, except as follows:

None

4. Consistency with Local Plans – The project is reasonably consistent with plans (existing at the time of submission of this application) of public agencies that are authorized by the State in which the project is located to plan for the development of the area surrounding the airport.

Yes

5. Consideration of Local Interest – It has given fair consideration to the interest of communities in or near where the project may be located.

Yes

6. Consultation with Users – In making a decision to undertake any airport development project under Title 49, United States Code, it has undertaken reasonable consultations with affected parties using the airport which project is proposed.

Yes

7. Public Hearings – In projects involving the location of an airport, an airport runway or a major runway extension, it has afforded the opportunity for public hearings for the purpose of considering the economic, social, and environmental effects of the airport or runway location and its consistency with goals and objectives of such planning as has been carried out by the community and it shall, when requested by the Secretary, submit a copy of the transcript of such hearings to the Secretary. Further, for such projects, it has on its management board either voting representation from the communities where the project is located or has advised the communities that they have the right to petition the Secretary concerning a proposed project.

Yes

8. Air and Water Quality Standards – In projects involving airport location, a major runway extension, or runway location it will provide for the Governor of the state in which the project is located to certify in writing to the Secretary that the project will be located, designed, constructed, and operated so as to comply with applicable and air and water quality standards. In any case where such standards have not been approved and where applicable air and water quality standards have been promulgated by the Administrator of the Environmental Protection Agency, certification shall be obtained from such Administrator. Notice of certification or refusal to certify shall be provided within sixty days after the project application has been received by the Secretary.

Yes

PART II – SECTION C (Continued)

9. **Exclusive Rights** – There is no grant of an exclusive right for the conduct of any aeronautical activity at any airport owned or controlled by the Sponsor except as follows:

None

10. **Land** – (a) The sponsor holds the following property interest in the following areas of land* which are to be developed or used as part of or in connection with the Airport subject to the following exceptions, encumbrances, and adverse interests, all of which areas are identified on the aforementioned property map designated as Exhibit "A":

The project is located on airport owned property.

The Sponsor further certifies that the above is based on a title examination by a qualified attorney or title company and that such attorney or title company has determined that the Sponsor holds the above property interests.

(b) The Sponsor will acquire within a reasonable time, but in any event prior to the start of any construction work under the Project, the following property interest in the following areas of land* on which such construction work is to be performed, all of which areas are identified on the aforementioned property map designated as Exhibit "A":

N/A

(c) The Sponsor will acquire within a reasonable time, and if feasible prior to the completion of all construction work under the Project, the following property interest in the following areas of land* which are to be developed or used as part of or in connection with the Airport as it will be upon completion of the Project, all of which areas are identified on the aforementioned property map designated as Exhibit "A"

N/A

*State the character of property interest in each area and list and identify for each all exceptions, encumbrances, and adverse interests of every kind and nature, including liens, easements, leases, etc. The separate areas of land need only be identified here by the area numbers shown on the property map.

PART III – BUDGET INFORMATION – CONSTRUCTION

SECTION A – GENERAL

1. Federal Domestic Assistance Catalog Number: 20.106
2. Functional or Other Breakout: N/A

SECTION B – CALCULATION OF FEDERAL GRANT

Cost Classification	Use only for revisions		Total Amount Required
	Latest Approved Amount	Adjustment + or (-)	
1. Administration expense	$	$	$ 58,000.00
2. Preliminary expense			
3. Land, structures, right-of-way			
4. Architectural engineering basic fees			
5. Other Architectural engineering fees			
6. Project inspection fees			436,000.00
7. Land development			
8. Relocation Expenses			
9. Relocation payments to Individuals and Businesses			
10. Demolition and removal			
11. Construction and project improvement			2,906,000.00
12. Equipment			
13. Miscellaneous			
14. Total (Lines 1 through 13)			3,400,000.00
15. Estimated Income (if applicable)			
16. Net Project Amount (Line 14 minus 15)			3,400,000.00
17. Less: Ineligible Exclusions			
18. Add: Contingencies			
19. Total Project Amt. (Excluding Rehabilitation Grants)			3,400,000.00
20. Federal Share requested of Line 19			3,096,040.00
21. Add Rehabilitation Grants Requested (100 Percent)			
22. Total Federal grant requested (lines 20 & 21)			3,096,040.00
23. Grantee share			151,980.00
24. Other shares			151,980.00
25. Total Project (Lines 22, 23 & 24)	$	$	$ 3,400,000.00

SECTION C – EXCLUSIONS

Classification	Ineligible for Participation (1)	Excluded From Contingency Provision (2)
a.	$	$
b.		
c.		
d.		
e.		
f.		
g. **Totals**	$	$

SECTION D – PROPOSED METHOD OF FINANCING NON-FEDERAL SHARE

27. Grantee Share	
a. Securities	$
b. Mortgages	
c. Appropriations (By Applicant)	151,980.00
d. Bonds	
e. Tax Levies	
f. Non Cash	
g. Other (Explain)	
h. TOTAL - Grantee share	151,980.00
28. Other Shares	
a. State	151,980.00
b. Other	
c. Total Other Shares	151,980.00
29. **TOTAL**	$ 303,960.00

SECTION E – REMARKS

Item 6. of AIP Grant Application Checklist - Bidding is anticipated to take place in May 2016, at which time a Bid Tabulation will be submitted.

PART IV – PROGRAM NARRATIVE (Attach – See Instructions)

PART IV
PROGRAM NARRATIVE
(Suggested Format)

PROJECT : Construct Apron Reconstruction Project

AIRPORT : (P52) Cottonwood Airport

1. Objective:

The purpose of this project is to reconstruct the apron pavements (approximately 52,800 SY). The existing pavements are well beyond their 20 year design lives. The north apron has a PCI value of 48 and is severely cracked, distressed and has failed and is in need of full reconstruction. The south apron has a PCI value of 62 with large cracks and will also be reconstructed.

2. Benefits Anticipated:

Reconstructing and rehabilitating the apron pavements will reset the 20 year design life of the pavement and reduce the amount of FOD generated by the failing pavement.

3. Approach: (See approved Scope of Work in Final Application)

The construction of the Apron Reconstruction and Rehabilitation will be completed through a traditional construction contract. C&S Engineers of Scottsdale, AZ, will serve as the airport's consultant to lead this effort. The design is currenly underway and will be completed in March 2016, at which time the project will be bid through a public process. After the bid process, the contract will be awarded to the lowest qualified bidder. Bidding is anticipated to take place in April 2016, with construction beginning in June 2016. Project completion is anticipated in November 2016, with final grant closeout in the spring of 2017.

4. Geographic Location:

The Cottonwood Airport is located within the City of Cottonwood at a latitude of 34° 42' 20" N and longitude of 112° 00' 33" W.

5. If Applicable, Provide Additional Information:

N/A

6. Sponsor's Representative: (include address & telephone number)

Mr. Morgan Scott, Development Services Operations Manager
City of Cottonwood
1490 West Mingus Avenue
Cottonwood, AZ 85326
P: (928) 340-2777
mscott@cottonwoodaz.gov

CIP/PRE-APPLICATION DATA SHEET

AIRPORT: (P52) Cottonwood Airport **LOCAL PRIORITY:** _____ **UPDATED:** _____

WORK ITEM: Construct Apron Reconstruction

SKETCH:

SEE ATTACHED

JUSTIFICATION: Reconstructing and rehabilitating the apron pavements will reset the 20 year design life of the pavement and reduce the amount of FOD generated by the failing pavement.

SPONSOR'S SIGNATURE: _____ **DATE:** _____

COST ESTIMATE: **3,400,000.00** Item (Excavation, Paving, etc.) _____

ADMINISTRATION:	$ 58,000.00	1:	$	4:	$		
CONSTRUCTION:	$ 2,906,000.00	2:	$	5:	$		
INSPECTION:	$ 436,000.00	3:	$			TOTAL:	$ 3,400,000.00

ADO USE:

PREAPP NO:_____ **GRANT NO:** _____ **NPIAS CODE:**_____ **WORK CODE:**_____ **FAA PRIOR:**_____ **FED $**_____

COTTONWOOD MUNICIPAL AIRPORT

CONSTRUCTION PROJECTS

16-1 CONSTRUCT APRON REHABILITATION (APPROX. 52,800 SY)

AIRPORT CAPITAL IMPROVEMENT PROGRAM

FY 2016

PROBABLE PROJECT COST

COTTONWOOD MUNICIPAL AIRPORT
CITY OF COTTONWOOD
APRON RECONSTRUCTION AND REHABILITATION PROJECT

K72.CRM

12/10/15

ITEM NO	FAA SPEC	DESCRIPTION	QUANTITY	UNITS	UNIT PRICE	TOTAL
1	M-100	MAINTENANCE AND PROTECTION OF TRAFFIC	1	LS	$50,000.00	$50,000.00
2	M-150	PROJECT SURVEY & STAKEOUT	1	LS	$50,000.00	$50,000.00
3	M-200	MOBILIZATION	1	LS	$218,000.00	$218,000.00
4	P-156	STORMWATER POLLUTION PREVENTION	1	LS	$15,000.00	$15,000.00
5	P-620	APRON PAINTING	1	LS	$75,000.00	$75,000.00
6		MISCELLANEOUS REMOVALS	1	LS	$30,000.00	$30,000.00
NORTH APRON						
7	P-120	REMOVE EXISTING AC PAVEMENT	28,700	SY	$3.00	$86,100.00
8	P-152	UNCLASSIFIED EXCAVATION	9,600	CY	$10.00	$96,000.00
9	P-615	STRUCTURAL GEOGRID REINFORCEMENT	28,700	SY	$7.00	$200,900.00
10	P-209	8" THICK CRUSHED AGGREGATE BASE COURSE	7,700	CY	$45.00	$346,500.00
11	P-401	3" THICK BITUMINOUS SURFACE COURSE	5,800	TON	$100.00	$580,000.00
12		NEW CONCRETE TIE-DOWN ANCHORS	135	EA	$240.00	$32,400.00
SOUTH APRON						
13	P-120	REMOVE EXISTING AC PAVEMENT	24,100	SY	$3.00	$72,300.00
14	P-152	UNCLASSIFIED EXCAVATION	8,100	CY	$10.00	$81,000.00
15	P-615	STRUCTURAL GEOGRID REINFORCEMENT	24,100	SY	$7.00	$168,700.00
16	P-209	8" THICK CRUSHED AGGREGATE BASE COURSE	6,500	CY	$45.00	$292,500.00
17	P-401	3" THICK BITUMINOUS SURFACE COURSE	4,900	TON	$100.00	$490,000.00
18		NEW CONCRETE TIE-DOWN ANCHORS	90	EA	$240.00	$21,600.00
		CONSTRUCTION SUBTOTAL				$2,906,000.00
		CONSTRUCTION MANAGEMENT FEES (15%)				$436,000.00
		SPONSOR ADMINISTRATION (2%)				$58,000.00
		TOTAL CONSTRUCTION COST				$3,400,000.00

(P52) COTTONWOOD AIRPORT
CONSTRUCT APRON RECONSTRUCTION
- PROPOSED PROJECT SCHEDULE -

ID	Task Name	Duration	Start	Finish
0	**Construct Apron Reconstruction and Rehabilitation**	**252 days**	**Mon 3/21/16**	**Tue 3/7/17**
1	**Bid Phase**	**35 days**	**Mon 3/21/16**	**Fri 5/6/16**
2	FAA Concurrence to Bid Project	1 wk	Mon 3/21/16	Fri 3/25/16
3	Advertisement of the Project and Issue Bid Documents	4 wks	Mon 4/4/16	Fri 4/29/16
4	Bid Opening	1 day	Fri 4/29/16	Fri 4/29/16
5	Prepare Final Bid Tabulation / Recommend Award	1 wk	Mon 5/2/16	Fri 5/6/16
6				
7	**Construction**	**200 days**	**Wed 6/1/16**	**Tue 3/7/17**
8	Conduct Pre-Construction Conference	1 day	Wed 6/1/16	Wed 6/1/16
9	Construction	120 days	Wed 6/15/16	Tue 11/29/16
10	Prepare Final Construction Report	6 wks	Thu 12/1/16	Wed 1/11/17
11	Grant Closeout	8 wks	Wed 1/11/17	Tue 3/7/17

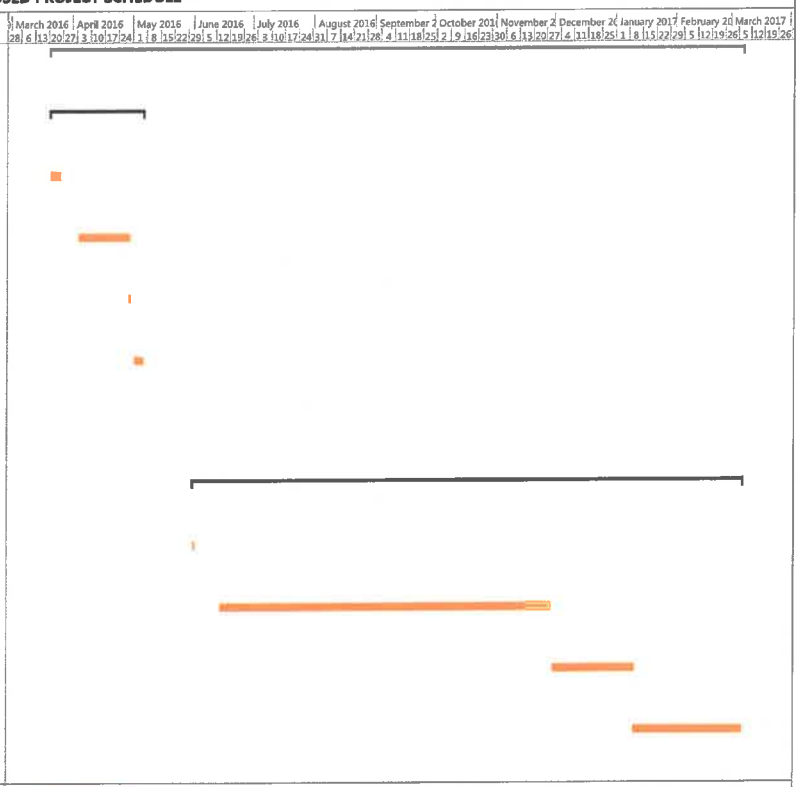

Project: Construct Apron Reconst
Date: Wed 12/16/15

Summary | Project Summary | Manual Task

FAA
Airports

ASSURANCES

Airport Sponsors

A. General.

1. These assurances shall be complied with in the performance of grant agreements for airport development, airport planning, and noise compatibility program grants for airport sponsors.
2. These assurances are required to be submitted as part of the project application by sponsors requesting funds under the provisions of Title 49, U.S.C., subtitle VII, as amended. As used herein, the term "public agency sponsor" means a public agency with control of a public-use airport; the term "private sponsor" means a private owner of a public-use airport; and the term "sponsor" includes both public agency sponsors and private sponsors.
3. Upon acceptance of this grant offer by the sponsor, these assurances are incorporated in and become part of this grant agreement.

B. Duration and Applicability.

1. **Airport development or Noise Compatibility Program Projects Undertaken by a Public Agency Sponsor.**

   The terms, conditions and assurances of this grant agreement shall remain in full force and effect throughout the useful life of the facilities developed or equipment acquired for an airport development or noise compatibility program project, or throughout the useful life of the project items installed within a facility under a noise compatibility program project, but in any event not to exceed twenty (20) years from the date of acceptance of a grant offer of Federal funds for the project. However, there shall be no limit on the duration of the assurances regarding Exclusive Rights and Airport Revenue so long as the airport is used as an airport. There shall be no limit on the duration of the terms, conditions, and assurances with respect to real property acquired with federal funds. Furthermore, the duration of the Civil Rights assurance shall be specified in the assurances.

2. **Airport Development or Noise Compatibility Projects Undertaken by a Private Sponsor.**

   The preceding paragraph 1 also applies to a private sponsor except that the useful life of project items installed within a facility or the useful life of the facilities developed or equipment acquired under an airport development or noise compatibility program project shall be no less than ten (10) years from the date of acceptance of Federal aid for the project.

3. **Airport Planning Undertaken by a Sponsor.**

Unless otherwise specified in this grant agreement, only Assurances 1, 2, 3, 5, 6, 13, 18, 25, 30, 32, 33, and 34 in Section C apply to planning projects. The terms, conditions, and assurances of this grant agreement shall remain in full force and effect during the life of the project; there shall be no limit on the duration of the assurances regarding Airport Revenue so long as the airport is used as an airport.

C. Sponsor Certification.

The sponsor hereby assures and certifies, with respect to this grant that:

1. **General Federal Requirements.**

It will comply with all applicable Federal laws, regulations, executive orders, policies, guidelines, and requirements as they relate to the application, acceptance and use of Federal funds for this project including but not limited to the following:

Federal Legislation

a. Title 49, U.S.C., subtitle VII, as amended.
b. Davis-Bacon Act - 40 U.S.C. 276(a), et seq.[1]
c. Federal Fair Labor Standards Act - 29 U.S.C. 201, et seq.
d. Hatch Act – 5 U.S.C. 1501, et seq.[2]
e. Uniform Relocation Assistance and Real Property Acquisition Policies Act of 1970 Title 42 U.S.C. 4601, et seq.[1 2]
f. National Historic Preservation Act of 1966 - Section 106 - 16 U.S.C. 470(f).[1]
g. Archeological and Historic Preservation Act of 1974 - 16 U.S.C. 469 through 469c.[1]
h. Native Americans Grave Repatriation Act - 25 U.S.C. Section 3001, et seq.
i. Clean Air Act, P.L. 90-148, as amended.
j. Coastal Zone Management Act, P.L. 93-205, as amended.
k. Flood Disaster Protection Act of 1973 - Section 102(a) - 42 U.S.C. 4012a.[1]
l. Title 49, U.S.C., Section 303, (formerly known as Section 4(f))
m. Rehabilitation Act of 1973 - 29 U.S.C. 794.
n. Title VI of the Civil Rights Act of 1964 (42 U.S.C. § 2000d et seq., 78 stat. 252) (prohibits discrimination on the basis of race, color, national origin);
o. Americans with Disabilities Act of 1990, as amended, (42 U.S.C. § 12101 et seq.), prohibits discrimination on the basis of disability).
p. Age Discrimination Act of 1975 - 42 U.S.C. 6101, et seq.
q. American Indian Religious Freedom Act, P.L. 95-341, as amended.
r. Architectural Barriers Act of 1968 -42 U.S.C. 4151, et seq.[1]
s. Power plant and Industrial Fuel Use Act of 1978 - Section 403- 2 U.S.C. 8373.[1]
t. Contract Work Hours and Safety Standards Act - 40 U.S.C. 327, et seq.[1]
u. Copeland Anti-kickback Act - 18 U.S.C. 874.1
v. National Environmental Policy Act of 1969 - 42 U.S.C. 4321, et seq.[1]
w. Wild and Scenic Rivers Act, P.L. 90-542, as amended.
x. Single Audit Act of 1984 - 31 U.S.C. 7501, et seq.[2]
y. Drug-Free Workplace Act of 1988 - 41 U.S.C. 702 through 706.

z. The Federal Funding Accountability and Transparency Act of 2006, as amended (Pub. L. 109-282, as amended by section 6202 of Pub. L. 110-252).

Executive Orders

a. Executive Order 11246 - Equal Employment Opportunity[1]
b. Executive Order 11990 - Protection of Wetlands
c. Executive Order 11998 – Flood Plain Management
d. Executive Order 12372 - Intergovernmental Review of Federal Programs
e. Executive Order 12699 - Seismic Safety of Federal and Federally Assisted New Building Construction[1]
f. Executive Order 12898 - Environmental Justice

Federal Regulations

a. 2 CFR Part 180 - OMB Guidelines to Agencies on Governmentwide Debarment and Suspension (Nonprocurement).
b. 2 CFR Part 200, Uniform Administrative Requirements, Cost Principles, and Audit Requirements for Federal Awards. [OMB Circular A-87 Cost Principles Applicable to Grants and Contracts with State and Local Governments, and OMB Circular A-133 - Audits of States, Local Governments, and Non-Profit Organizations].[4, 5, 6]
c. 2 CFR Part 1200 – Nonprocurement Suspension and Debarment
d. 14 CFR Part 13 - Investigative and Enforcement Procedures14 CFR Part 16 - Rules of Practice For Federally Assisted Airport Enforcement Proceedings.
e. 14 CFR Part 150 - Airport noise compatibility planning.
f. 28 CFR Part 35- Discrimination on the Basis of Disability in State and Local Government Services.
g. 28 CFR § 50.3 - U.S. Department of Justice Guidelines for Enforcement of Title VI of the Civil Rights Act of 1964.
h. 29 CFR Part 1 - Procedures for predetermination of wage rates.[1]
i. 29 CFR Part 3 - Contractors and subcontractors on public building or public work financed in whole or part by loans or grants from the United States.[1]
j. 29 CFR Part 5 - Labor standards provisions applicable to contracts covering federally financed and assisted construction (also labor standards provisions applicable to non-construction contracts subject to the Contract Work Hours and Safety Standards Act).[1]
k. 41 CFR Part 60 - Office of Federal Contract Compliance Programs, Equal Employment Opportunity, Department of Labor (Federal and federally assisted contracting requirements).[1]
l. 49 CFR Part 18 - Uniform administrative requirements for grants and cooperative agreements to state and local governments.[3]
m. 49 CFR Part 20 - New restrictions on lobbying.
n. 49 CFR Part 21 – Nondiscrimination in federally-assisted programs of the Department of Transportation - effectuation of Title VI of the Civil Rights Act of 1964.
o. 49 CFR Part 23 - Participation by Disadvantage Business Enterprise in Airport Concessions.

p. 49 CFR Part 24 – Uniform Relocation Assistance and Real Property Acquisition for Federal and Federally Assisted Programs.[1 2]
q. 49 CFR Part 26 – Participation by Disadvantaged Business Enterprises in Department of Transportation Programs.
r. 49 CFR Part 27 – Nondiscrimination on the Basis of Handicap in Programs and Activities Receiving or Benefiting from Federal Financial Assistance.[1]
s. 49 CFR Part 28 – Enforcement of Nondiscrimination on the Basis of Handicap in Programs or Activities conducted by the Department of Transportation.
t. 49 CFR Part 30 - Denial of public works contracts to suppliers of goods and services of countries that deny procurement market access to U.S. contractors.
u. 49 CFR Part 32 – Governmentwide Requirements for Drug-Free Workplace (Financial Assistance)
v. 49 CFR Part 37 – Transportation Services for Individuals with Disabilities (ADA).
w. 49 CFR Part 41 - Seismic safety of Federal and federally assisted or regulated new building construction.

Specific Assurances

Specific assurances required to be included in grant agreements by any of the above laws, regulations or circulars are incorporated by reference in this grant agreement.

Footnotes to Assurance C.1.

[1] These laws do not apply to airport planning sponsors.

[2] These laws do not apply to private sponsors.

[3] 49 CFR Part 18 and 2 CFR Part 200 contain requirements for State and Local Governments receiving Federal assistance. Any requirement levied upon State and Local Governments by this regulation and circular shall also be applicable to private sponsors receiving Federal assistance under Title 49, United States Code.

[4] On December 26, 2013 at 78 FR 78590, the Office of Management and Budget (OMB) issued the Uniform Administrative Requirements, Cost Principles, and Audit Requirements for Federal Awards in 2 CFR Part 200. 2 CFR Part 200 replaces and combines the former Uniform Administrative Requirements for Grants (OMB Circular A-102 and Circular A-110 or 2 CFR Part 215 or Circular) as well as the Cost Principles (Circulars A-21 or 2 CFR part 220; Circular A-87 or 2 CFR part 225; and A-122, 2 CFR part 230). Additionally it replaces Circular A-133 guidance on the Single Annual Audit. In accordance with 2 CFR section 200.110, the standards set forth in Part 200 which affect administration of Federal awards issued by Federal agencies become effective once implemented by Federal agencies or when any future amendment to this Part becomes final. Federal agencies, including the Department of Transportation, must implement the policies and procedures applicable to Federal awards by promulgating a regulation to be effective by December 26, 2014 unless different provisions are required by statute or approved by OMB.

[5] Cost principles established in 2 CFR part 200 subpart E must be used as guidelines for determining the eligibility of specific types of expenses.

[6] Audit requirements established in 2 CFR part 200 subpart F are the guidelines for audits.

2. **Responsibility and Authority of the Sponsor.**

   a. Public Agency Sponsor:

   It has legal authority to apply for this grant, and to finance and carry out the proposed project; that a resolution, motion or similar action has been duly adopted or passed as an official act of the applicant's governing body authorizing the filing of the application, including all understandings and assurances contained therein, and directing and authorizing the person identified as the official representative of the applicant to act in connection with the application and to provide such additional information as may be required.

   b. Private Sponsor:

   It has legal authority to apply for this grant and to finance and carry out the proposed project and comply with all terms, conditions, and assurances of this grant agreement. It shall designate an official representative and shall in writing direct and authorize that person to file this application, including all understandings and assurances contained therein; to act in connection with this application; and to provide such additional information as may be required.

3. **Sponsor Fund Availability.**

   It has sufficient funds available for that portion of the project costs which are not to be paid by the United States. It has sufficient funds available to assure operation and maintenance of items funded under this grant agreement which it will own or control.

4. **Good Title.**

   a. It, a public agency or the Federal government, holds good title, satisfactory to the Secretary, to the landing area of the airport or site thereof, or will give assurance satisfactory to the Secretary that good title will be acquired.

   b. For noise compatibility program projects to be carried out on the property of the sponsor, it holds good title satisfactory to the Secretary to that portion of the property upon which Federal funds will be expended or will give assurance to the Secretary that good title will be obtained.

5. **Preserving Rights and Powers.**

   a. It will not take or permit any action which would operate to deprive it of any of the rights and powers necessary to perform any or all of the terms, conditions, and assurances in this grant agreement without the written approval of the Secretary, and will act promptly to acquire, extinguish or modify any outstanding rights or claims of right of others which would interfere with such performance by the sponsor. This shall be done in a manner acceptable to the Secretary.

b. It will not sell, lease, encumber, or otherwise transfer or dispose of any part of its title or other interests in the property shown on Exhibit A to this application or, for a noise compatibility program project, that portion of the property upon which Federal funds have been expended, for the duration of the terms, conditions, and assurances in this grant agreement without approval by the Secretary. If the transferee is found by the Secretary to be eligible under Title 49, United States Code, to assume the obligations of this grant agreement and to have the power, authority, and financial resources to carry out all such obligations, the sponsor shall insert in the contract or document transferring or disposing of the sponsor's interest, and make binding upon the transferee all of the terms, conditions, and assurances contained in this grant agreement.

c. For all noise compatibility program projects which are to be carried out by another unit of local government or are on property owned by a unit of local government other than the sponsor, it will enter into an agreement with that government. Except as otherwise specified by the Secretary, that agreement shall obligate that government to the same terms, conditions, and assurances that would be applicable to it if it applied directly to the FAA for a grant to undertake the noise compatibility program project. That agreement and changes thereto must be satisfactory to the Secretary. It will take steps to enforce this agreement against the local government if there is substantial non-compliance with the terms of the agreement.

d. For noise compatibility program projects to be carried out on privately owned property, it will enter into an agreement with the owner of that property which includes provisions specified by the Secretary. It will take steps to enforce this agreement against the property owner whenever there is substantial non-compliance with the terms of the agreement.

e. If the sponsor is a private sponsor, it will take steps satisfactory to the Secretary to ensure that the airport will continue to function as a public-use airport in accordance with these assurances for the duration of these assurances.

f. If an arrangement is made for management and operation of the airport by any agency or person other than the sponsor or an employee of the sponsor, the sponsor will reserve sufficient rights and authority to insure that the airport will be operated and maintained in accordance Title 49, United States Code, the regulations and the terms, conditions and assurances in this grant agreement and shall insure that such arrangement also requires compliance therewith.

g. Sponsors of commercial service airports will not permit or enter into any arrangement that results in permission for the owner or tenant of a property used as a residence, or zoned for residential use, to taxi an aircraft between that property and any location on airport. Sponsors of general aviation airports entering into any arrangement that results in permission for the owner of residential real property adjacent to or near the airport must comply with the requirements of Sec. 136 of Public Law 112-95 and the sponsor assurances.

6. **Consistency with Local Plans.**

   The project is reasonably consistent with plans (existing at the time of submission of this application) of public agencies that are authorized by the State in which the project is located to plan for the development of the area surrounding the airport.

7. **Consideration of Local Interest.**

   It has given fair consideration to the interest of communities in or near where the project may be located.

8. **Consultation with Users.**

   In making a decision to undertake any airport development project under Title 49, United States Code, it has undertaken reasonable consultations with affected parties using the airport at which project is proposed.

9. **Public Hearings.**

   In projects involving the location of an airport, an airport runway, or a major runway extension, it has afforded the opportunity for public hearings for the purpose of considering the economic, social, and environmental effects of the airport or runway location and its consistency with goals and objectives of such planning as has been carried out by the community and it shall, when requested by the Secretary, submit a copy of the transcript of such hearings to the Secretary. Further, for such projects, it has on its management board either voting representation from the communities where the project is located or has advised the communities that they have the right to petition the Secretary concerning a proposed project.

10. **Metropolitan Planning Organization.**

    In projects involving the location of an airport, an airport runway, or a major runway extension at a medium or large hub airport, the sponsor has made available to and has provided upon request to the metropolitan planning organization in the area in which the airport is located, if any, a copy of the proposed amendment to the airport layout plan to depict the project and a copy of any airport master plan in which the project is described or depicted.

11. **Pavement Preventive Maintenance.**

    With respect to a project approved after January 1, 1995, for the replacement or reconstruction of pavement at the airport, it assures or certifies that it has implemented an effective airport pavement maintenance-management program and it assures that it will use such program for the useful life of any pavement constructed, reconstructed or repaired with Federal financial assistance at the airport. It will provide such reports on pavement condition and pavement management programs as the Secretary determines may be useful.

12. **Terminal Development Prerequisites.**

    For projects which include terminal development at a public use airport, as defined in Title 49, it has, on the date of submittal of the project grant application, all the safety equipment required for certification of such airport under section 44706 of Title 49, United States Code, and all the security equipment required by rule or regulation, and

has provided for access to the passenger enplaning and deplaning area of such airport to passengers enplaning and deplaning from aircraft other than air carrier aircraft.

13. **Accounting System, Audit, and Record Keeping Requirements.**

    a. It shall keep all project accounts and records which fully disclose the amount and disposition by the recipient of the proceeds of this grant, the total cost of the project in connection with which this grant is given or used, and the amount or nature of that portion of the cost of the project supplied by other sources, and such other financial records pertinent to the project. The accounts and records shall be kept in accordance with an accounting system that will facilitate an effective audit in accordance with the Single Audit Act of 1984.

    b. It shall make available to the Secretary and the Comptroller General of the United States, or any of their duly authorized representatives, for the purpose of audit and examination, any books, documents, papers, and records of the recipient that are pertinent to this grant. The Secretary may require that an appropriate audit be conducted by a recipient. In any case in which an independent audit is made of the accounts of a sponsor relating to the disposition of the proceeds of a grant or relating to the project in connection with which this grant was given or used, it shall file a certified copy of such audit with the Comptroller General of the United States not later than six (6) months following the close of the fiscal year for which the audit was made.

14. **Minimum Wage Rates.**

    It shall include, in all contracts in excess of $2,000 for work on any projects funded under this grant agreement which involve labor, provisions establishing minimum rates of wages, to be predetermined by the Secretary of Labor, in accordance with the Davis-Bacon Act, as amended (40 U.S.C. 276a-276a-5), which contractors shall pay to skilled and unskilled labor, and such minimum rates shall be stated in the invitation for bids and shall be included in proposals or bids for the work.

15. **Veteran's Preference.**

    It shall include in all contracts for work on any project funded under this grant agreement which involve labor, such provisions as are necessary to insure that, in the employment of labor (except in executive, administrative, and supervisory positions), preference shall be given to Vietnam era veterans, Persian Gulf veterans, Afghanistan-Iraq war veterans, disabled veterans, and small business concerns owned and controlled by disabled veterans as defined in Section 47112 of Title 49, United States Code. However, this preference shall apply only where the individuals are available and qualified to perform the work to which the employment relates.

16. **Conformity to Plans and Specifications.**

    It will execute the project subject to plans, specifications, and schedules approved by the Secretary. Such plans, specifications, and schedules shall be submitted to the Secretary prior to commencement of site preparation, construction, or other performance under this grant agreement, and, upon approval of the Secretary, shall be incorporated into this grant agreement. Any modification to the approved plans,

specifications, and schedules shall also be subject to approval of the Secretary, and incorporated into this grant agreement.

17. **Construction Inspection and Approval.**

    It will provide and maintain competent technical supervision at the construction site throughout the project to assure that the work conforms to the plans, specifications, and schedules approved by the Secretary for the project. It shall subject the construction work on any project contained in an approved project application to inspection and approval by the Secretary and such work shall be in accordance with regulations and procedures prescribed by the Secretary. Such regulations and procedures shall require such cost and progress reporting by the sponsor or sponsors of such project as the Secretary shall deem necessary.

18. **Planning Projects.**

    In carrying out planning projects:

    a. It will execute the project in accordance with the approved program narrative contained in the project application or with the modifications similarly approved.

    b. It will furnish the Secretary with such periodic reports as required pertaining to the planning project and planning work activities.

    c. It will include in all published material prepared in connection with the planning project a notice that the material was prepared under a grant provided by the United States.

    d. It will make such material available for examination by the public, and agrees that no material prepared with funds under this project shall be subject to copyright in the United States or any other country.

    e. It will give the Secretary unrestricted authority to publish, disclose, distribute, and otherwise use any of the material prepared in connection with this grant.

    f. It will grant the Secretary the right to disapprove the sponsor's employment of specific consultants and their subcontractors to do all or any part of this project as well as the right to disapprove the proposed scope and cost of professional services.

    g. It will grant the Secretary the right to disapprove the use of the sponsor's employees to do all or any part of the project.

    h. It understands and agrees that the Secretary's approval of this project grant or the Secretary's approval of any planning material developed as part of this grant does not constitute or imply any assurance or commitment on the part of the Secretary to approve any pending or future application for a Federal airport grant.

19. **Operation and Maintenance.**

    a. The airport and all facilities which are necessary to serve the aeronautical users of the airport, other than facilities owned or controlled by the United States, shall be operated at all times in a safe and serviceable condition and in accordance with the minimum standards as may be required or prescribed by applicable Federal,

state and local agencies for maintenance and operation. It will not cause or permit any activity or action thereon which would interfere with its use for airport purposes. It will suitably operate and maintain the airport and all facilities thereon or connected therewith, with due regard to climatic and flood conditions. Any proposal to temporarily close the airport for non-aeronautical purposes must first be approved by the Secretary. In furtherance of this assurance, the sponsor will have in effect arrangements for-

1) Operating the airport's aeronautical facilities whenever required;
2) Promptly marking and lighting hazards resulting from airport conditions, including temporary conditions; and
3) Promptly notifying airmen of any condition affecting aeronautical use of the airport. Nothing contained herein shall be construed to require that the airport be operated for aeronautical use during temporary periods when snow, flood or other climatic conditions interfere with such operation and maintenance. Further, nothing herein shall be construed as requiring the maintenance, repair, restoration, or replacement of any structure or facility which is substantially damaged or destroyed due to an act of God or other condition or circumstance beyond the control of the sponsor.

b. It will suitably operate and maintain noise compatibility program items that it owns or controls upon which Federal funds have been expended.

20. **Hazard Removal and Mitigation.**

It will take appropriate action to assure that such terminal airspace as is required to protect instrument and visual operations to the airport (including established minimum flight altitudes) will be adequately cleared and protected by removing, lowering, relocating, marking, or lighting or otherwise mitigating existing airport hazards and by preventing the establishment or creation of future airport hazards.

21. **Compatible Land Use.**

It will take appropriate action, to the extent reasonable, including the adoption of zoning laws, to restrict the use of land adjacent to or in the immediate vicinity of the airport to activities and purposes compatible with normal airport operations, including landing and takeoff of aircraft. In addition, if the project is for noise compatibility program implementation, it will not cause or permit any change in land use, within its jurisdiction, that will reduce its compatibility, with respect to the airport, of the noise compatibility program measures upon which Federal funds have been expended.

22. **Economic Nondiscrimination.**

a. It will make the airport available as an airport for public use on reasonable terms and without unjust discrimination to all types, kinds and classes of aeronautical activities, including commercial aeronautical activities offering services to the public at the airport.

b. In any agreement, contract, lease, or other arrangement under which a right or privilege at the airport is granted to any person, firm, or corporation to conduct or

to engage in any aeronautical activity for furnishing services to the public at the airport, the sponsor will insert and enforce provisions requiring the contractor to-

1) furnish said services on a reasonable, and not unjustly discriminatory, basis to all users thereof, and

2) charge reasonable, and not unjustly discriminatory, prices for each unit or service, provided that the contractor may be allowed to make reasonable and nondiscriminatory discounts, rebates, or other similar types of price reductions to volume purchasers.

c. Each fixed-based operator at the airport shall be subject to the same rates, fees, rentals, and other charges as are uniformly applicable to all other fixed-based operators making the same or similar uses of such airport and utilizing the same or similar facilities.

d. Each air carrier using such airport shall have the right to service itself or to use any fixed-based operator that is authorized or permitted by the airport to serve any air carrier at such airport.

e. Each air carrier using such airport (whether as a tenant, non-tenant, or subtenant of another air carrier tenant) shall be subject to such nondiscriminatory and substantially comparable rules, regulations, conditions, rates, fees, rentals, and other charges with respect to facilities directly and substantially related to providing air transportation as are applicable to all such air carriers which make similar use of such airport and utilize similar facilities, subject to reasonable classifications such as tenants or non-tenants and signatory carriers and non-signatory carriers. Classification or status as tenant or signatory shall not be unreasonably withheld by any airport provided an air carrier assumes obligations substantially similar to those already imposed on air carriers in such classification or status.

f. It will not exercise or grant any right or privilege which operates to prevent any person, firm, or corporation operating aircraft on the airport from performing any services on its own aircraft with its own employees [including, but not limited to maintenance, repair, and fueling] that it may choose to perform.

g. In the event the sponsor itself exercises any of the rights and privileges referred to in this assurance, the services involved will be provided on the same conditions as would apply to the furnishing of such services by commercial aeronautical service providers authorized by the sponsor under these provisions.

h. The sponsor may establish such reasonable, and not unjustly discriminatory, conditions to be met by all users of the airport as may be necessary for the safe and efficient operation of the airport.

i. The sponsor may prohibit or limit any given type, kind or class of aeronautical use of the airport if such action is necessary for the safe operation of the airport or necessary to serve the civil aviation needs of the public.

23. **Exclusive Rights.**

It will permit no exclusive right for the use of the airport by any person providing, or intending to provide, aeronautical services to the public. For purposes of this paragraph, the providing of the services at an airport by a single fixed-based operator shall not be construed as an exclusive right if both of the following apply:

a. It would be unreasonably costly, burdensome, or impractical for more than one fixed-based operator to provide such services, and

b. If allowing more than one fixed-based operator to provide such services would require the reduction of space leased pursuant to an existing agreement between such single fixed-based operator and such airport. It further agrees that it will not, either directly or indirectly, grant or permit any person, firm, or corporation, the exclusive right at the airport to conduct any aeronautical activities, including, but not limited to charter flights, pilot training, aircraft rental and sightseeing, aerial photography, crop dusting, aerial advertising and surveying, air carrier operations, aircraft sales and services, sale of aviation petroleum products whether or not conducted in conjunction with other aeronautical activity, repair and maintenance of aircraft, sale of aircraft parts, and any other activities which because of their direct relationship to the operation of aircraft can be regarded as an aeronautical activity, and that it will terminate any exclusive right to conduct an aeronautical activity now existing at such an airport before the grant of any assistance under Title 49, United States Code.

24. **Fee and Rental Structure.**

It will maintain a fee and rental structure for the facilities and services at the airport which will make the airport as self-sustaining as possible under the circumstances existing at the particular airport, taking into account such factors as the volume of traffic and economy of collection. No part of the Federal share of an airport development, airport planning or noise compatibility project for which a grant is made under Title 49, United States Code, the Airport and Airway Improvement Act of 1982, the Federal Airport Act or the Airport and Airway Development Act of 1970 shall be included in the rate basis in establishing fees, rates, and charges for users of that airport.

25. **Airport Revenues.**

a. All revenues generated by the airport and any local taxes on aviation fuel established after December 30, 1987, will be expended by it for the capital or operating costs of the airport; the local airport system; or other local facilities which are owned or operated by the owner or operator of the airport and which are directly and substantially related to the actual air transportation of passengers or property; or for noise mitigation purposes on or off the airport. The following exceptions apply to this paragraph:

1) If covenants or assurances in debt obligations issued before September 3, 1982, by the owner or operator of the airport, or provisions enacted before September 3, 1982, in governing statutes controlling the owner or operator's financing, provide for the use of the revenues from any of the airport owner or

operator's facilities, including the airport, to support not only the airport but also the airport owner or operator's general debt obligations or other facilities, then this limitation on the use of all revenues generated by the airport (and, in the case of a public airport, local taxes on aviation fuel) shall not apply.

2) If the Secretary approves the sale of a privately owned airport to a public sponsor and provides funding for any portion of the public sponsor's acquisition of land, this limitation on the use of all revenues generated by the sale shall not apply to certain proceeds from the sale. This is conditioned on repayment to the Secretary by the private owner of an amount equal to the remaining unamortized portion (amortized over a 20-year period) of any airport improvement grant made to the private owner for any purpose other than land acquisition on or after October 1, 1996, plus an amount equal to the federal share of the current fair market value of any land acquired with an airport improvement grant made to that airport on or after October 1, 1996.

3) Certain revenue derived from or generated by mineral extraction, production, lease, or other means at a general aviation airport (as defined at Section 47102 of title 49 United States Code), if the FAA determines the airport sponsor meets the requirements set forth in Sec. 813 of Public Law 112-95.

b. As part of the annual audit required under the Single Audit Act of 1984, the sponsor will direct that the audit will review, and the resulting audit report will provide an opinion concerning, the use of airport revenue and taxes in paragraph (a), and indicating whether funds paid or transferred to the owner or operator are paid or transferred in a manner consistent with Title 49, United States Code and any other applicable provision of law, including any regulation promulgated by the Secretary or Administrator.

c. Any civil penalties or other sanctions will be imposed for violation of this assurance in accordance with the provisions of Section 47107 of Title 49, United States Code.

26. **Reports and Inspections.**

It will:

a. submit to the Secretary such annual or special financial and operations reports as the Secretary may reasonably request and make such reports available to the public; make available to the public at reasonable times and places a report of the airport budget in a format prescribed by the Secretary;

b. for airport development projects, make the airport and all airport records and documents affecting the airport, including deeds, leases, operation and use agreements, regulations and other instruments, available for inspection by any duly authorized agent of the Secretary upon reasonable request;

c. for noise compatibility program projects, make records and documents relating to the project and continued compliance with the terms, conditions, and assurances of this grant agreement including deeds, leases, agreements, regulations, and other instruments, available for inspection by any duly authorized agent of the Secretary upon reasonable request; and

d. in a format and time prescribed by the Secretary, provide to the Secretary and make available to the public following each of its fiscal years, an annual report listing in detail:

   1) all amounts paid by the airport to any other unit of government and the purposes for which each such payment was made; and

   2) all services and property provided by the airport to other units of government and the amount of compensation received for provision of each such service and property.

27. **Use by Government Aircraft.**

It will make available all of the facilities of the airport developed with Federal financial assistance and all those usable for landing and takeoff of aircraft to the United States for use by Government aircraft in common with other aircraft at all times without charge, except, if the use by Government aircraft is substantial, charge may be made for a reasonable share, proportional to such use, for the cost of operating and maintaining the facilities used. Unless otherwise determined by the Secretary, or otherwise agreed to by the sponsor and the using agency, substantial use of an airport by Government aircraft will be considered to exist when operations of such aircraft are in excess of those which, in the opinion of the Secretary, would unduly interfere with use of the landing areas by other authorized aircraft, or during any calendar month that –

a. Five (5) or more Government aircraft are regularly based at the airport or on land adjacent thereto; or

b. The total number of movements (counting each landing as a movement) of Government aircraft is 300 or more, or the gross accumulative weight of Government aircraft using the airport (the total movement of Government aircraft multiplied by gross weights of such aircraft) is in excess of five million pounds.

28. **Land for Federal Facilities.**

It will furnish without cost to the Federal Government for use in connection with any air traffic control or air navigation activities, or weather-reporting and communication activities related to air traffic control, any areas of land or water, or estate therein, or rights in buildings of the sponsor as the Secretary considers necessary or desirable for construction, operation, and maintenance at Federal expense of space or facilities for such purposes. Such areas or any portion thereof will be made available as provided herein within four months after receipt of a written request from the Secretary.

29. **Airport Layout Plan.**

a. It will keep up to date at all times an airport layout plan of the airport showing

   1) boundaries of the airport and all proposed additions thereto, together with the boundaries of all offsite areas owned or controlled by the sponsor for airport purposes and proposed additions thereto;

   2) the location and nature of all existing and proposed airport facilities and structures (such as runways, taxiways, aprons, terminal buildings, hangars and

roads), including all proposed extensions and reductions of existing airport facilities;

3) the location of all existing and proposed nonaviation areas and of all existing improvements thereon; and

4) all proposed and existing access points used to taxi aircraft across the airport's property boundary. Such airport layout plans and each amendment, revision, or modification thereof, shall be subject to the approval of the Secretary which approval shall be evidenced by the signature of a duly authorized representative of the Secretary on the face of the airport layout plan. The sponsor will not make or permit any changes or alterations in the airport or any of its facilities which are not in conformity with the airport layout plan as approved by the Secretary and which might, in the opinion of the Secretary, adversely affect the safety, utility or efficiency of the airport.

b. If a change or alteration in the airport or the facilities is made which the Secretary determines adversely affects the safety, utility, or efficiency of any federally owned, leased, or funded property on or off the airport and which is not in conformity with the airport layout plan as approved by the Secretary, the owner or operator will, if requested, by the Secretary (1) eliminate such adverse effect in a manner approved by the Secretary; or (2) bear all costs of relocating such property (or replacement thereof) to a site acceptable to the Secretary and all costs of restoring such property (or replacement thereof) to the level of safety, utility, efficiency, and cost of operation existing before the unapproved change in the airport or its facilities except in the case of a relocation or replacement of an existing airport facility due to a change in the Secretary's design standards beyond the control of the airport sponsor.

30. **Civil Rights.**

It will promptly take any measures necessary to ensure that no person in the United States shall, on the grounds of race, creed, color, national origin, sex, age, or disability be excluded from participation in, be denied the benefits of, or be otherwise subjected to discrimination in any activity conducted with, or benefiting from, funds received from this grant.

a. Using the definitions of activity, facility and program as found and defined in §§ 21.23 (b) and 21.23 (e) of 49 CFR § 21, the sponsor will facilitate all programs, operate all facilities, or conduct all programs in compliance with all non-discrimination requirements imposed by, or pursuant to these assurances.

b. Applicability

1) Programs and Activities. If the sponsor has received a grant (or other federal assistance) for any of the sponsor's program or activities, these requirements extend to all of the sponsor's programs and activities.

2) Facilities. Where it receives a grant or other federal financial assistance to construct, expand, renovate, remodel, alter or acquire a facility, or part of a facility, the assurance extends to the entire facility and facilities operated in connection therewith.

3) Real Property. Where the sponsor receives a grant or other Federal financial assistance in the form of, or for the acquisition of real property or an interest in real property, the assurance will extend to rights to space on, over, or under such property.

c. Duration.

The sponsor agrees that it is obligated to this assurance for the period during which Federal financial assistance is extended to the program, except where the Federal financial assistance is to provide, or is in the form of, personal property, or real property, or interest therein, or structures or improvements thereon, in which case the assurance obligates the sponsor, or any transferee for the longer of the following periods:

1) So long as the airport is used as an airport, or for another purpose involving the provision of similar services or benefits; or

2) So long as the sponsor retains ownership or possession of the property.

d. Required Solicitation Language. It will include the following notification in all solicitations for bids, Requests For Proposals for work, or material under this grant agreement and in all proposals for agreements, including airport concessions, regardless of funding source:

"The **(Name of Sponsor),** in accordance with the provisions of Title VI of the Civil Rights Act of 1964 (78 Stat. 252, 42 U.S.C. §§ 2000d to 2000d-4) and the Regulations, hereby notifies all bidders that it will affirmatively ensure that any contract entered into pursuant to this advertisement, disadvantaged business enterprises and airport concession disadvantaged business enterprises will be afforded full and fair opportunity to submit bids in response to this invitation and will not be discriminated against on the grounds of race, color, or national origin in consideration for an award."

e. Required Contract Provisions.

1) It will insert the non-discrimination contract clauses requiring compliance with the acts and regulations relative to non-discrimination in Federally-assisted programs of the DOT, and incorporating the acts and regulations into the contracts by reference in every contract or agreement subject to the non-discrimination in Federally-assisted programs of the DOT acts and regulations.

2) It will include a list of the pertinent non-discrimination authorities in every contract that is subject to the non-discrimination acts and regulations.

3) It will insert non-discrimination contract clauses as a covenant running with the land, in any deed from the United States effecting or recording a transfer of real property, structures, use, or improvements thereon or interest therein to a sponsor.

4) It will insert non-discrimination contract clauses prohibiting discrimination on the basis of race, color, national origin, creed, sex, age, or handicap as a

covenant running with the land, in any future deeds, leases, license, permits, or similar instruments entered into by the sponsor with other parties:

a) For the subsequent transfer of real property acquired or improved under the applicable activity, project, or program; and

b) For the construction or use of, or access to, space on, over, or under real property acquired or improved under the applicable activity, project, or program.

f. It will provide for such methods of administration for the program as are found by the Secretary to give reasonable guarantee that it, other recipients, sub-recipients, sub-grantees, contractors, subcontractors, consultants, transferees, successors in interest, and other participants of Federal financial assistance under such program will comply with all requirements imposed or pursuant to the acts, the regulations, and this assurance.

g. It agrees that the United States has a right to seek judicial enforcement with regard to any matter arising under the acts, the regulations, and this assurance.

31. **Disposal of Land.**

a. For land purchased under a grant for airport noise compatibility purposes, including land serving as a noise buffer, it will dispose of the land, when the land is no longer needed for such purposes, at fair market value, at the earliest practicable time. That portion of the proceeds of such disposition which is proportionate to the United States' share of acquisition of such land will be, at the discretion of the Secretary, (1) reinvested in another project at the airport, or (2) transferred to another eligible airport as prescribed by the Secretary. The Secretary shall give preference to the following, in descending order, (1) reinvestment in an approved noise compatibility project, (2) reinvestment in an approved project that is eligible for grant funding under Section 47117(e) of title 49 United States Code, (3) reinvestment in an approved airport development project that is eligible for grant funding under Sections 47114, 47115, or 47117 of title 49 United States Code, (4) transferred to an eligible sponsor of another public airport to be reinvested in an approved noise compatibility project at that airport, and (5) paid to the Secretary for deposit in the Airport and Airway Trust Fund. If land acquired under a grant for noise compatibility purposes is leased at fair market value and consistent with noise buffering purposes, the lease will not be considered a disposal of the land. Revenues derived from such a lease may be used for an approved airport development project that would otherwise be eligible for grant funding or any permitted use of airport revenue.

b. For land purchased under a grant for airport development purposes (other than noise compatibility), it will, when the land is no longer needed for airport purposes, dispose of such land at fair market value or make available to the Secretary an amount equal to the United States' proportionate share of the fair market value of the land. That portion of the proceeds of such disposition which is proportionate to the United States' share of the cost of acquisition of such land will, (1) upon application to the Secretary, be reinvested or transferred to another

eligible airport as prescribed by the Secretary. The Secretary shall give preference to the following, in descending order: (1) reinvestment in an approved noise compatibility project, (2) reinvestment in an approved project that is eligible for grant funding under Section 47117(e) of title 49 United States Code, (3) reinvestment in an approved airport development project that is eligible for grant funding under Sections 47114, 47115, or 47117 of title 49 United States Code, (4) transferred to an eligible sponsor of another public airport to be reinvested in an approved noise compatibility project at that airport, and (5) paid to the Secretary for deposit in the Airport and Airway Trust Fund.

c. Land shall be considered to be needed for airport purposes under this assurance if (1) it may be needed for aeronautical purposes (including runway protection zones) or serve as noise buffer land, and (2) the revenue from interim uses of such land contributes to the financial self-sufficiency of the airport. Further, land purchased with a grant received by an airport operator or owner before December 31, 1987, will be considered to be needed for airport purposes if the Secretary or Federal agency making such grant before December 31, 1987, was notified by the operator or owner of the uses of such land, did not object to such use, and the land continues to be used for that purpose, such use having commenced no later than December 15, 1989.

d. Disposition of such land under (a) (b) or (c) will be subject to the retention or reservation of any interest or right therein necessary to ensure that such land will only be used for purposes which are compatible with noise levels associated with operation of the airport.

32. **Engineering and Design Services.**

It will award each contract, or sub-contract for program management, construction management, planning studies, feasibility studies, architectural services, preliminary engineering, design, engineering, surveying, mapping or related services with respect to the project in the same manner as a contract for architectural and engineering services is negotiated under Title IX of the Federal Property and Administrative Services Act of 1949 or an equivalent qualifications-based requirement prescribed for or by the sponsor of the airport.

33. **Foreign Market Restrictions.**

It will not allow funds provided under this grant to be used to fund any project which uses any product or service of a foreign country during the period in which such foreign country is listed by the United States Trade Representative as denying fair and equitable market opportunities for products and suppliers of the United States in procurement and construction.

34. **Policies, Standards, and Specifications.**

It will carry out the project in accordance with policies, standards, and specifications approved by the Secretary including but not limited to the advisory circulars listed in the Current FAA Advisory Circulars for AIP projects, dated 3-20-2014 (the latest approved version as of this grant offer) and included in this grant, and in accordance

with applicable state policies, standards, and specifications approved by the Secretary.

35. **Relocation and Real Property Acquisition.**

    a. It will be guided in acquiring real property, to the greatest extent practicable under State law, by the land acquisition policies in Subpart B of 49 CFR Part 24 and will pay or reimburse property owners for necessary expenses as specified in Subpart B.
    b. It will provide a relocation assistance program offering the services described in Subpart C and fair and reasonable relocation payments and assistance to displaced persons as required in Subpart D and E of 49 CFR Part 24.
    c. It will make available within a reasonable period of time prior to displacement, comparable replacement dwellings to displaced persons in accordance with Subpart E of 49 CFR Part 24.

36. **Access By Intercity Buses.**

    The airport owner or operator will permit, to the maximum extent practicable, intercity buses or other modes of transportation to have access to the airport; however, it has no obligation to fund special facilities for intercity buses or for other modes of transportation.

37. **Disadvantaged Business Enterprises.**

    The sponsor shall not discriminate on the basis of race, color, national origin or sex in the award and performance of any DOT-assisted contract covered by 49 CFR Part 26, or in the award and performance of any concession activity contract covered by 49 CFR Part 23. In addition, the sponsor shall not discriminate on the basis of race, color, national origin or sex in the administration of its DBE and ACDBE programs or the requirements of 49 CFR Parts 23 and 26. The sponsor shall take all necessary and reasonable steps under 49 CFR Parts 23 and 26 to ensure nondiscrimination in the award and administration of DOT-assisted contracts, and/or concession contracts. The sponsor's DBE and ACDBE programs, as required by 49 CFR Parts 26 and 23, and as approved by DOT, are incorporated by reference in this agreement. Implementation of these programs is a legal obligation and failure to carry out its terms shall be treated as a violation of this agreement. Upon notification to the sponsor of its failure to carry out its approved program, the Department may impose sanctions as provided for under Parts 26 and 23 and may, in appropriate cases, refer the matter for enforcement under 18 U.S.C. 1001 and/or the Program Fraud Civil Remedies Act of 1936 (31 U.S.C. 3801).

38. **Hangar Construction.**

    If the airport owner or operator and a person who owns an aircraft agree that a hangar is to be constructed at the airport for the aircraft at the aircraft owner's expense, the airport owner or operator will grant to the aircraft owner for the hangar a long term lease that is subject to such terms and conditions on the hangar as the airport owner or operator may impose.

39. **Competitive Access.**

a. If the airport owner or operator of a medium or large hub airport (as defined in section 47102 of title 49, U.S.C.) has been unable to accommodate one or more requests by an air carrier for access to gates or other facilities at that airport in order to allow the air carrier to provide service to the airport or to expand service at the airport, the airport owner or operator shall transmit a report to the Secretary that-

   1) Describes the requests;

   2) Provides an explanation as to why the requests could not be accommodated; and

   3) Provides a time frame within which, if any, the airport will be able to accommodate the requests.

b. Such report shall be due on either February 1 or August 1 of each year if the airport has been unable to accommodate the request(s) in the six month period prior to the applicable due date.

FAA
Airports

Current FAA Advisory Circulars Required for Use in AIP Funded and PFC Approved Projects

Updated: 2/11/2015

View the most current versions of these ACs and any associated changes at:
http://www.faa.gov/airports/resources/advisory_circulars

NUMBER	TITLE
70/7460-1K	Obstruction Marking and Lighting
150/5020-1	Noise Control and Compatibility Planning for Airports
150/5070-6B Change 2	Airport Master Plans
150/5070-7 Change 1	The Airport System Planning Process
150/5100-13B	Development of State Standards for Nonprimary Airports
150/5200-28D	Notices to Airmen (NOTAMS) for Airport Operators
150/5200-30C Change 1	Airport Winter Safety And Operations
150/5200-31C Changes 1-2	Airport Emergency Plan
150/5210-5D	Painting, Marking, and Lighting of Vehicles Used on an Airport
150/5210-7D	Aircraft Rescue and Fire Fighting Communications
150/5210-13C	Airport Water Rescue Plans and Equipment
150/5210-14B	Aircraft Rescue Fire Fighting Equipment, Tools and Clothing
150/5210-15A	Aircraft Rescue and Firefighting Station Building Design
150/5210-18A	Systems for Interactive Training of Airport Personnel

NUMBER	TITLE
150/5210-19A	Driver's Enhanced Vision System (DEVS) Ground Vehicle Operations on Airports
150/5220-10E	Guide Specification for Aircraft Rescue and Fire Fighting (ARFF) Vehicles
150/5220-16D	Automated Weather Observing Systems (AWOS) for Non-Federal Applications
150/5220-17B	Aircraft Rescue and Fire Fighting (ARFF) Training Facilities
150/5220-18A	Buildings for Storage and Maintenance of Airport Snow and Ice Control Equipment and Materials
150/5220-20A	Airport Snow and Ice Control Equipment
150/5220-21C	Aircraft Boarding Equipment
150/5220-22B	Engineered Materials Arresting Systems (EMAS) for Aircraft Overruns
150/5220-23	Frangible Connections
150/5220-24	Foreign Object Debris Detection Equipment
150/5220-25	Airport Avian Radar Systems
150/5220-26 Change 1	Airport Ground Vehicle Automatic Dependent Surveillance - Broadcast (ADS-B) Out Squitter Equipment
150/5300-7B	FAA Policy on Facility Relocations Occasioned by Airport Improvements of Changes
150/5300-13A Change 1	Airport Design
150/5300-14C	Design of Aircraft Deicing Facilities
150/5300-16A	General Guidance and Specifications for Aeronautical Surveys: Establishment of Geodetic Control and Submission to the National Geodetic Survey
150/5300-17C	Standards for Using Remote Sensing Technologies in Airport Surveys
150/5300-18B Change 1	General Guidance and Specifications for Submission of Aeronautical Surveys to NGS: Field Data Collection and Geographic Information System (GIS) Standards
150/5320-5D	Airport Drainage Design
150/5320-6E	Airport Pavement Design and Evaluation
150/5320-12C Changes 1-8	Measurement, Construction, and Maintenance of Skid Resistant Airport Pavement Surfaces

NUMBER	TITLE
150/5320-15A	Management of Airport Industrial Waste
150/5235-4B	Runway Length Requirements for Airport Design
150/5335-5C	Standardized Method of Reporting Airport Pavement Strength - PCN
150/5340-1L	Standards for Airport Markings
150/5340-5D	Segmented Circle Airport Marker System
150/5340-18F	Standards for Airport Sign Systems
150/5340-26C	Maintenance of Airport Visual Aid Facilities
150/5340-30H	Design and Installation Details for Airport Visual Aids
150/5345-3G	Specification for L-821, Panels for the Control of Airport Lighting
150/5345-5B	Circuit Selector Switch
150/5345-7F	Specification for L-824 Underground Electrical Cable for Airport Lighting Circuits
150/5345-10H	Specification for Constant Current Regulators and Regulator Monitors
150/5345-12F	Specification for Airport and Heliport Beacons
150/5345-13B	Specification for L-841 Auxiliary Relay Cabinet Assembly for Pilot Control of Airport Lighting Circuits
150/5345-26D	FAA Specification For L-823 Plug and Receptacle, Cable Connectors
150/5345-27E	Specification for Wind Cone Assemblies
150/5345-28G	Precision Approach Path Indicator (PAPI) Systems
150/5345-39D	Specification for L-853, Runway and Taxiway Retro reflective Markers
150/5345-42G	Specification for Airport Light Bases, Transformer Housings, Junction Boxes, and Accessories
150/5345-43G	Specification for Obstruction Lighting Equipment
150/5345-44J	Specification for Runway and Taxiway Signs
150/5345-45C	Low-Impact Resistant (LIR) Structures
150/5345-46D	Specification for Runway and Taxiway Light Fixtures

NUMBER	TITLE
150/5345-47C	Specification for Series to Series Isolation Transformers for Airport Lighting Systems
150/5345-49C	Specification L-854, Radio Control Equipment
150/5345-50B	Specification for Portable Runway and Taxiway Lights
150/5345-51B	Specification for Discharge-Type Flashing Light Equipment
150/5345-52A	Generic Visual Glideslope Indicators (GVGI)
150/5345-53D	Airport Lighting Equipment Certification Program
150/5345-54B	Specification for L-884, Power and Control Unit for Land and Hold Short Lighting Systems
150/5345-55A	Specification for L-893, Lighted Visual Aid to Indicate Temporary Runway Closure
150/5345-56B	Specification for L-890 Airport Lighting Control and Monitoring System (ALCMS)
150/5360-12F	Airport Signing and Graphics
150/5360-13 Change 1	Planning and Design Guidelines for Airport Terminal Facilities
150/5360-14	Access to Airports By Individuals With Disabilities
150/5370-2F	Operational Safety on Airports During Construction
150/5370-10G	Standards for Specifying Construction of Airports
150/5370-11B	Use of Nondestructive Testing in the Evaluation of Airport Pavements
150/5370-13A	Off-Peak Construction of Airport Pavements Using Hot-Mix Asphalt
150/5370-15B	Airside Applications for Artificial Turf
150/5370-16	Rapid Construction of Rigid (Portland Cement Concrete) Airfield Pavements
150/5370-17	Airside Use of Heated Pavement Systems
150/5380-7B	Airport Pavement Management Program
150/5380-9	Guidelines and Procedures for Measuring Airfield Pavement Roughness
150/5390-2C	Heliport Design
150/5395-1A	Seaplane Bases

THE FOLLOWING ADDITIONAL APPLY TO AIP PROJECTS ONLY

Updated: 3/7/2014

NUMBER	TITLE
150/5100-14E	Architectural, Engineering, and Planning Consultant Services for Airport Grant Projects
150/5100-17 Changes 1 - 6	Land Acquisition and Relocation Assistance for Airport Improvement Program Assisted Projects
150/5300-9B	Predesign, Prebid, and Preconstruction Conferences for Airport Grant Projects
150/5300-15A	Use of Value Engineering for Engineering Design of Airports Grant Projects
150/5320-17A	Airfield Pavement Surface Evaluation and Rating (PASER) Manuals
150/5370-6D	Construction Progress and Inspection Report – Airport Improvement Program (AIP)
150/5370-12A	Quality Control of Construction for Airport Grant Projects

CONTRACTOR CONTRACTUAL REQUIREMENTS

ATTACHMENT 1

During the performance of this contract, the contractor, for itself, its assignees and successors in interest (hereinafter referred to as the "contractor") agrees as follows:

1. Compliance with Regulations. The contractor shall comply with the regulations relative to nondiscrimination in federally assisted programs of the Department of Transportation (hereinafter, "DOT") Title 49, Code of Federal Regulations, Part 21, as they may be amended from time to time (hereinafter referred to as the Regulations), which are herein incorporated by reference and made a part of this contract.

2. Nondiscrimination. The contractor, with regard to the work performed by it during the contract, shall not discriminate on the grounds of race, color, or national origin in the selection and retention of subcontractors, including procurements of materials and leases of equipment. The contractor shall not participate either directly of indirectly in the discrimination prohibited by section 21.5 of the Regulations, including employment practices when the contract covers a program set forth in Appendix B of the Regulations.

3. Solicitations for Subcontracts, Including Procurements of Materials and Equipment. In all solicitations either by competitive bidding or negotiation made by the contractor for work to be performed under a subcontract, including procurements of materials or lease of equipment, each potential subcontractor or supplier shall be notified by the contractor of the contractor's obligations under this contract and the Regulations relative to nondiscrimination on the grounds of race, color, or national origin.

4. Information and Reports. The contractor shall provide all information and reports required by the Regulations or directives issued pursuant thereto and shall permit access to its books, records, accounts, other sources of information, and its facilities as may be determined by the Sponsor or the Federal Aviation Administration (FAA) to be pertinent to ascertain compliance with such Regulations, orders, and instructions. Where any information required of a contract is in the exclusive possession of another who fails or refuses to furnish this information, the contractor shall so certify to the sponsor or the FAA, as appropriate, and shall set forth what efforts it has made to obtain the information.

5. Sanctions for Noncompliance. In the event of the contractor's noncompliance with the nondiscrimination provisions of this contract, the sponsor shall impose such contract sanctions as it or the FAA may determine to be appropriate, including, but not limited to:

   a. Withholding of payments to the contractor under the contract until the contractor complies, and/or

   b. Cancellation, termination, or suspension of the contract, in whole or in part.

6. Incorporation of Provisions. The contractor shall include the provisions of paragraphs 1 through 5 in every subcontract, including procurements of materials and leases of equipment, unless exempt by the Regulations or directives issued pursuant thereto. The contractor shall take such action with respect to any subcontract or procurement as the sponsor or the FAA may direct as a means of enforcing such provisions including sanctions for noncompliance. Provided, however, that in the event a contractor becomes involved in, or is threatened with, litigation with a subcontractor or supplier as a result of such direction, the contractor may request the Sponsor to enter into such litigation to protect the interests of the sponsor and, in addition, the contractor may request the United States to enter into such litigation to protect the interest of the United States.

CLAUSES FOR DEEDS, LICENSES, LEASES, PERMITS OR SIMILAR INSTRUMENTS

ATTACHMENT 2

The following clauses shall be included in deeds, licenses, leases, permits, or similar instruments entered into by the Sponsor pursuant to the provisions of Assurances 5(a) and 5(b).

1. The (grantee, licensee, permittee, etc., as appropriate) for himself, his heirs, personal representatives, successors in interest, and assigns, as a part of the consideration hereof, does hereby covenant and agree (in the case of deeds and leases add "as a covenant running with the land") that in the event facilities are constructed, maintained, or otherwise operated on the said property described in this (deed, license, lease, permit, etc.) for a purpose for which a DOT program or activity is extended or for another purpose involving the provision of similar services or benefits, the (grantee, licensee, lessee, permittee, etc.) shall maintain and operate such facilities and services in compliance with all other requirements imposed pursuant to 49 CFR Part 21, Nondiscrimination in Federally Assisted Programs of the Department of Transportation, and as said Regulations may be amended.

2. The (grantee, licensee, lessee, permittee, etc., as appropriate) for himself, his heirs, personal representatives, successors in interest, and assigns, as a part of the consideration hereof, does hereby covenant and agree (in the case of deeds and leases add "as a covenant running with the land") that: (1) no person on the grounds of race, color, or national origin shall be excluded from participation in, denied the benefits of, or be otherwise subjected to discrimination in the use of said facilities, (2) that in the construction of any improvements on, over, or under such land and the furnishing of services thereon, no person on the grounds of race, color, or national origin shall be excluded from participation in, denied the benefits of, or otherwise be subjected to discrimination, (3) that the (grantee, licensee, permittee, etc.) shall use the premises in compliance with all other requirements imposed by or pursuant to 49 CFR Part 21, Nondiscrimination in Federally Assisted Programs of the Department of Transportation, and as said Regulations may be amended.

REQUIRED STATEMENTS
AIRPORT IMPROVEMENT PROGRAM PROJECTS

AIRPORT: (P52) Cottonwood Airport

LOCATION: Cottonwood, AZ

AIP PROJECT NO.: 03-04-0012

STATEMENTS APPLICABLE TO THIS PROJECT Construct Apron Reconstruction

☒ **a.** **INTEREST OF NEIGHBORING COMMUNITIES**: In formulating this project, consideration has been given to the interest of communities that are near Cottonwood Airport.

☒ **b.** **THE DEVELOPMENT PROPOSED IN THIS PROJECT** will not require the use of publicly owned land from a public park, recreation area, wildlife and fowl refuge, or a historical site under Federal, State, or Local jurisdiction.

☒ **c.** **FBO COORDINATION**: The airport development proposed in this project has been coordinated with the Fixed Base Operator(s) utilizing Cottonwood Airport, and they have been informed regarding the scope and nature of this project.

☒ **d.** **THE PROPOSED PROJECT IS CONSISTENT** with existing approved plans for the area surrounding the airport.

The above statements have been duly considered and are applicable to this project. (Provide comment for any statement not checked).

BY: _____ DATE: 2-23-16

TITLE: Development Services Operations Manager

SPONSORING AGENCY: City of Cottonwood

NOTE: Where opposition is stated to an airport development project, whether expressly or by proposed revision, the following specific information concerning the opposition to the project must be furnished.

a. Identification of the Federal, state, or local governmental agency, or the person or persons opposing the project;

b. The nature and basis of opposition;

c. Sponsor's plan to accommodate or otherwise satisfy the opposition;

d. Whether an opportunity for a hearing was afforded, and if a hearing was held, an analysis of the facts developed at the hearing as they relate to the social, economic, and environmental aspects of the proposed project and its consistency with the goals and objectives of such urban planning as has been carried out by the community.

e. If the opponents proposed any alternatives, what these alternatives were and the reason for nonacceptance;

f. Sponsor's plans, if any, to minimize any adverse effects of the project;

g. Benefits to be gained by the proposed development; and

h. Any other pertinent information which would be of assistance in determining whether to proceed with the project.

CERTIFICATION FOR CONTRACTS, GRANTS, LOANS, AND COOPERATIVE AGREEMENTS

The undersigned certifies, to the best of his or her knowledge and belief, that:

1. No Federal appropriated funds have been paid or will be paid, by or on behalf of the undersigned, to any person for influencing or attempting to influence an officer or employee of any agency, a Member of Congress, an officer or employee of Congress, or an employee of a Member of Congress in connection with the awarding of any Federal contract, the making of any Federal Grant, the making of any Federal loan, the entering into of any cooperative agreement, and the extension, continuation, renewal, amendment, or modification of any Federal contract, grant, loan, or cooperative agreement.

2. If any funds other than Federal appropriated funds have been paid or will be paid to any person for influencing or attempting to influence an officer or employee of any agency, a Member of Congress, an officer or employee of Congress, or an employee of a Member of Congress in connection with this Federal contract, grant, loan, or cooperative agreement, the undersigned shall complete and submit Standard Form LLL "Disclosure of Lobby Activities", in accordance with its instructions.

3. The undersigned shall require that the language of this certification be included in the award documents for all subawards at all tiers (including subcontracts, subgrants, and contracts under grants, loans, and cooperative agreements) and that all subrecipents shall certify and disclose accordingly.

This certification is a material representation of fact upon which reliance was placed when this transaction was made or entered into. Submission of this certification is a prerequisite for making or entering into this transaction imposed by section 1352, title 31, U.S. Code. Any person who fails to file the required certification shall be subject to a civil penalty of not less than $10,000 and not more than $100,000 for each such failure.

Signed _____ Date 2-23-16
Sponsor's Authorized Representative

Title Development Services Operations Manager

STANDARD DOT TITLE VI ASSURANCES

City of Cottonwood (hereinafter referred to as the Sponsor) hereby agrees that as a condition to receiving Federal financial assistance from the Department of Transportation (DOT), it will comply with Title VI of the Civil Rights Act of 1964 (42 U.S.C. 2000d et seq.) and all requirements imposed by 49 CFR Part 21, Nondiscrimination in Federally Assisted Programs of the Department of Transportation -- Effectuation of Title VI of the Civil Rights Act of 1964 (hereinafter referred to as the "Regulations") to the end that no person in the United States shall, on the ground of race, color, or national origin, be excluded from participation in, be denied the benefits of, or be otherwise subjected to discrimination under any program or activity for which the applicant receives Federal financial assistance and will immediately take any measures necessary to effectuate this agreement. Without limiting the above general assurance, the Sponsor agrees concerning this grant that:

1. Each "program" and "facility" (as defined in Section 21.23(a) and 21.23(b)) will be conducted or operated in compliance with all requirements of the Regulations.

2. It will insert the clauses of Attachment 1 of this assurance in every contract subject to the Act and the Regulations.

3. Where Federal financial assistance is received to construct a facility, or part of a facility, the assurance shall extend to the entire facility and facilities operated in connection therewith.

4. Where Federal financial assistance is in the form or for the acquisition of real property or an interest in real property, the assurance shall extend to rights to space on, over, or under such property.

5. It will include the appropriate clauses set forth in Attachment 2 of this assurance, as a covenant running with the land, in any future deeds, leases, permits, licenses, and similar agreements entered into by the Sponsor with other parties:

(a) for the subsequent transfer of real property acquired or improved with Federal financial assistance under this project; and

(b) for the construction or use of or access to space on, over, or under real property acquired or improved with Federal financial assistance under this Project.

6. This assurance obligates the Sponsor for the period during which Federal financial assistance is extended to the program, except where the Federal financial assistance is to provide, or is in the form of personal property or real property or interest therein or structures or improvements thereon, in which case the assurance obligates the Sponsor or any transferee for the longer of the following periods:

(a) the period during which the property is used for a purpose for which Federal financial assistance is extended, or for another purpose involving the provision of similar services or benefits; or

(b) the period during which the Sponsor retains ownership or possession of the property.

7. It will provide for such methods of administration for the program as are found by the Secretary of transportation of the official to whom he delegates specific authority to give reasonable guarantees that it, other sponsors, subgrantees, contractors, subcontractors, transferees, successors in interest, and other participants of Federal financial assistance under such program will comply with all requirements imposed or pursuant to the act, the Regulations, and this assurance.

STANDARD DOT TITLE VI ASSURANCES *(Continued)*

8. It agrees that the United States has a right to seek judicial enforcement with regard to any matter arising under the Act, the Regulations, and this assurance.

THIS ASSURANCE is given in consideration of and for the purpose of obtaining Federal financial assistance for this Project and is binding on its contractors, the Sponsor, subcontractors, transferees, successors in interest and other participants in the Project. The person or persons whose signatures appear below are authorized to sign this assurance on behalf of the Sponsor.

DATED 2-23-16

City of Cottonwood
(Sponsor)

(Signature of Authorized Official)

Certification and Disclosure Regarding Potential Conflicts of Interest
Airport Improvement Program Sponsor Certification

Sponsor: City of Cottonwood

Airport: (P52) Cottonwood Airport

Project Number: 03-04-0012

Description of Work: Construct Apron Reconstruction

A sponsor must disclose in writing any potential conflict of interest to the Federal Aviation Administration (FAA) or pass-through entity. No employee, officer or agent of the sponsor or subgrant recipient shall participate in selection, or in the award or administration of a contract supported by federal funds if a conflict of interest, real or apparent, would be involved. Such a conflict would arise when:

1. The employee, officer or agent,
2. Any member of his immediate family,
3. His or her partner, or
4. An organization which employs, or is about to employ, any of the above, has a financial or other interest in the firm selected for award. The sponsor's or subgrant recipient's officers, employees or agents will neither solicit nor accept gratuities, favors or anything of monetary value from contractors, potential contractors, or parties to subagreements.

   Sponsors or subgrant recipients may set minimum rules where the financial interest is not substantial or the gift is an unsolicited item of nominal intrinsic value. To the extent permitted by state or local law or regulations, such standards or conduct will provide for penalties, sanctions, or other disciplinary actions for violations of such standards by the grantee's and subgrant recipient's officers, employees, or agents, or by contractors or their agents.

The sponsor or subgrant recipient must maintain a written code of standards of conduct governing the performance of their employees engaged in the award and administration of contracts.

1. By checking "Yes," the sponsor or subgrant recipient certifies that it does not have any potential conflict of interest or Significant Financial Interests. By checking "No," the sponsor or subgrant recipient discloses that it does have a potential conflict of interest, which is further explained below.

   ☒ Yes ☐ No

2. The sponsor or subgrant recipient maintains a written code of standards of conduct governing the performance of their employees engaged in the award and administration of contracts. By checking "No", the sponsor or subgrant recipient discloses that it does not have a written policy, which is further explained below.

   ☒ Yes ☐ No

3. Explanation of items marked "no":

Sponsor's Certification

I certify, for the project identified herein, responses to the forgoing items are accurate as marked and have the explanation for any item marked "no" is correct and complete.

I declare under penalty of perjury that the foregoing is true and correct. I understand that knowingly and willfully providing false information to the federal government is a violation of 18 USC § 1001 (False Statements) and could subject me to fines, imprisonment, or both.

Executed on this day of 23rd day of February, 2016.

Name of Sponsor:

Name of Sponsor's Designated Official Representative: Morgan Scott

Title of Sponsor's Designated Official Representative: Development Services Operations Manager

Signature of Sponsor's Designated Official Representative: _____

Drug-Free Workplace
Airport Improvement Program Sponsor Certification

Sponsor:	City of Cottonwood
Airport:	(P52) Cottonwood Airport
Project Number:	03-04-0012
Description of Work:	Construct Apron Reconstruction

Application

49 USC § 47105(d) authorizes the Secretary to require certification from the sponsor that it will comply with the statutory and administrative requirements in carrying out a project under the Airport Improvement Program (AIP). General requirements on the drug-free workplace within federal grant programs are described in 2 CFR part 182. Sponsors are required to certify they will be, or will continue to provide, a drug-free workplace in accordance with the regulation. The AIP project grant agreement contains specific assurances on the Drug-Free Workplace Act of 1988.

Certification Statements

Except for the certification statement below marked as not applicable (N/A), this list includes major requirements for this aspect of project implementation. This list is not comprehensive nor does it relieve the sponsor from fully complying with all applicable statutory and administrative standards.

1. A statement has been or <u>will be</u> published notifying employees that the unlawful manufacture, distribution, dispensing, possession, or use of a controlled substance is prohibited in the sponsor's workplace, and specifying the actions to be taken against employees for violation of such prohibition.

   ☒ Yes ☐ No ☐ N/A

2. An ongoing drug-free awareness program has been or <u>will be</u> established to inform employees about:

   a. The dangers of drug abuse in the workplace
   b. The sponsor's policy of maintaining a drug-free workplace
   c. Any available drug counseling, rehabilitation, and employee assistance programs
   d. The penalties that may be imposed upon employees for drug abuse violations occurring in the workplace

   ☒ Yes ☐ No ☐ N/A

3. Each employee to be engaged in the performance of the work has been or <u>will be</u> given a copy of the statement required within item 1 above.

   ☒ Yes ☐ No ☐ N/A

4. Employees have been or will be notified in the statement required by item 1 above that, as a condition employment under the grant, the employee will:

   a. Abide by the terms of the statement

   b. Notify the employer in writing of his or her conviction for a violation of a criminal drug statute occurring in the workplace no later than five calendar days after such conviction

   ☒ Yes ☐ No ☐ N/A

5. The Federal Aviation Administration (FAA) will be notified in writing within 10 calendar days after receiving notice under item 4b above from an employee or otherwise receiving actual notice of such conviction. Employers of convicted employees must provide notice, including position title of the employee, to the FAA. Notices shall include the project number of each affected grant.

   ☒ Yes ☐ No ☐ N/A

6. One of the following actions will be taken within 30 calendar days of receiving a notice under item 4b above with respect to any employee who is so convicted:

   a. Take appropriate personnel action against such an employee, up to and including termination, consistent with the requirements of the Rehabilitation Act of 1973, as amended

   b. Require such employee to participate satisfactorily in a drug abuse assistance or rehabilitation program approved for such purposes by a federal, state, or local health, law enforcement, or other appropriate agency

   ☒ Yes ☐ No ☐ N/A

7. A good faith effort will be made to continue to maintain a drug-free workplace through implementation of items 1 through 6 above.

   ☒ Yes ☐ No ☐ N/A

Site(s) of performance of work:

Location 1
Name of Location: Cottonwood Airport
Address: 1001 West Mingus Avenue, Cottonwood, AZ 86326

Location 2 (if applicable)
Name of Location:
Address:

Location 3 (if applicable)
Name of Location:
Address:

Additional documentation for any above item marked "no":

Sponsor's Certification

I certify, for the project identified herein, responses to the forgoing items are accurate as marked and additional documentation for any item marked "no" is correct and complete.

I declare under penalty of perjury that the foregoing is true and correct. I understand that knowingly and willfully providing false information to the federal government is a violation of 18 USC § 1001 (False Statements) and could subject me to fines, imprisonment, or both.

Executed on this 23rd day of February, 2016.

Name of Sponsor: City of Cottonwood

Name of Sponsor's Designated Official Representative: Morgan Scott

Title of Sponsor's Designated Official Representative: Development Services Operations Manager

Signature of Sponsor's Designated Official Representative: _____

Selection of Consultants
Airport Improvement Program Sponsor Certification

Sponsor:	City of Cottonwood
Airport:	(P52) Cottonwood Airport
Project Number:	03-04-0012
Description of Work:	Construct Apron Reconstruction

Application

49 USC § 47105(d) authorizes the Secretary to require certification from the sponsor that it will comply with the statutory and administrative requirements in carrying out a project under the Airport Improvement Program (AIP). General requirements for selection of consultant services within federal grant programs are described in 2 CFR §§ 200.317-200.326.2 CFR 200. Sponsors may use other qualifications-based procedures provided they are equivalent to specific standards in 2 CFR §§ 200.317-200.326 and FAA Advisory Circular 150/5100-14, Architectural, Engineering, and Planning Consultant Services for Airport Grant Projects.

Certification Statements

Except for the certification statement below marked as not applicable (N/A), this list includes major requirements for this aspect of project implementation. This list is not comprehensive nor does it relieve the sponsor from fully complying with all applicable statutory and administrative standards.

1. Solicitations were or will be made to ensure fair and open competition from a wide area of interest.

   ☒ Yes ☐ No ☐ N/A

2. Consultants were or will be selected using competitive procedures based on qualifications, experience, and disadvantaged enterprise requirements with the fees determined through negotiations after initial selection.

   ☒ Yes ☐ No ☐ N/A

3. A record of negotiations has been or will be prepared reflecting considerations involved in the establishment of fees, which are not significantly above the sponsor's independent cost estimate.

   ☒ Yes ☐ No ☐ N/A

4. If engineering or other services are to be performed by sponsor force account personnel, prior approval was or will be obtained from the Federal Aviation Administration (FAA).

   ☐ Yes ☐ No ☒ N/A

5. The consultant services contracts clearly or will clearly establish the scope of work and delineate the division of responsibilities between all parties engaged in carrying out elements of the project.

   ☒ Yes ☐ No ☐ N/A

6. Costs associated with work ineligible for AIP funding are or will be clearly identified and separated from eligible items in solicitations, contracts, and related project documents.

   ☐ Yes ☐ No ☒ N/A

7. Mandatory contact provisions for grant-assisted contracts have been or will be included in consultant services contracts.

   ☒ Yes ☐ No ☐ N/A

8. The cost-plus-percentage-of-cost methods of contracting prohibited under federal standards were not or will not be used.

   ☒ Yes ☐ No ☐ N/A

9. If the services being procured cover more than the single grant project referenced in this certification, the scope of work was or will be specifically described in the advertisement, and future work will not be initiated beyond five years.

   ☐ Yes ☐ No ☒ N/A

Additional documentation for any above item marked "no":

Sponsor's Certification

I certify, for the project identified herein, responses to the forgoing items are accurate as marked and additional documentation for any item marked "no" is correct and complete.

I declare under penalty of perjury that the foregoing is true and correct. I understand that knowingly and willfully providing false information to the federal government is a violation of 18 USC § 1001 (False Statements) and could subject me to fines, imprisonment, or both.

Executed on this 23rd day of February, 2016.

Name of Sponsor: City of Cottonwood

Name of Sponsor's Designated Official Representative: Morgan Scott

Title of Sponsor's Designated Official Representative: Development Services Operations Manager

Signature of Sponsor's Designated Official Representative: _____

Project Plans and Specifications
Airport Improvement Program Sponsor Certification

Sponsor:	City of Cottonwood
Airport:	(P52) Cottonwood Airport
Project Number:	03-04-0012
Description of Work:	Construct Apron Reconstruction

Application

49 USC § 47105(d) authorizes the Secretary to require certification from the sponsor that it will comply with the statutory and administrative requirements in carrying out a project under the Airport Improvement Program (AIP) labor and civil rights standards applicable to AIP are established by the Department of Labor (www.dol.gov/). AIP Grant Assurance C.1—General Federal Requirements identifies applicable federal laws, regulations, executive orders, policies, guidelines and requirements for assistance under AIP. A list of current advisory circulars with specific standards for design or construction of airports as well as procurement/ installation of equipment and facilities is referenced in standard airport sponsor Grant Assurance 34 contained in the grant agreement.

Certification Statements

Except for the certification statement below marked as not applicable (N/A), this list includes major requirements for this aspect of project implementation. This list is not comprehensive nor does it relieve the sponsor from fully complying with all applicable statutory and administrative standards.

1. The plans and specifications were or <u>will be</u> prepared in accordance with applicable federal standards and requirements, so no deviation or modification to standards set forth in the advisory circulars, or state standard, is necessary other than those previously approved by the Federal Aviation Administration (FAA).

   ☒ Yes ☐ No ☐ N/A

2. Specifications for the procurement of equipment are not or <u>will not</u> be proprietary or written so as to restrict competition. At least two manufacturers can meet the specification.

   ☒ Yes ☐ No ☐ N/A

3. The development that is included or <u>will be included</u> in the plans is depicted on the airport layout plan approved by the FAA.

   ☒ Yes ☐ No ☐ N/A

4. Development that is ineligible for AIP funding has been or will be omitted from the plans and specifications.

   ☐ Yes ☐ No ☒ N/A

5. The process control and acceptance tests required for the project by standards contained in Advisory Circular 150/5370-10 are or will be included in the project specifications.

   ☒ Yes ☐ No ☐ N/A

6. If a value engineering clause is incorporated into the contract, concurrence was or will be obtained from the FAA.

   ☐ Yes ☐ No ☒ N/A

7. The plans and specifications incorporate or will incorporate applicable requirements and recommendations set forth in the federally approved environmental finding.

   ☒ Yes ☐ No ☐ N/A

8. For construction activities within or near aircraft operational areas, the requirements contained in Advisory Circular 150/5370-2 have been or will be discussed with the FAA as well as incorporated into the specifications, and a safety/phasing plan has FAA's concurrence, if required.

   ☒ Yes ☐ No ☐ N/A

9. The project was or will be physically completed without federal participation in costs due to errors and omissions in the plans and specifications that were foreseeable at the time of project design.

   ☐ Yes ☐ No ☒ N/A

10. The design of all buildings have complied or will comply with the seismic design requirements of 49 CFR § 41.120.

    ☐ Yes ☐ No ☒ N/A

Attach Additional documentation for any above item marked "no":

Sponsor's Certification

I certify, for the project identified herein, responses to the forgoing items are accurate as marked and additional documentation for any item marked "no" is correct and complete.

I declare under penalty of perjury that the foregoing is true and correct. I understand that knowingly and willfully providing false information to the federal government is a violation of 18 USC § 1001 (False Statements) and could subject me to fines, imprisonment, or both.

Executed on this 23rd day of February, 2016.

Name of Sponsor: City of Cottonwood

Name of Sponsor's Designated Official Representative: Morgan Scott

Title of Sponsor's Designated Official Representative: Development Services Operations Manager

Signature of Sponsor's Designated Official Representative: _____

Equipment and Construction Contracts
Airport Improvement Sponsor Certification

Sponsor:	City of Cottonwood
Airport:	(P52) Cottonwood Airport
Project Number:	03-04-0012
Description of Work:	Construct Apron Reconstruction

Application

49 USC § 47105(d) authorizes the Secretary to require certification from the sponsor that it will comply with the statutory and administrative requirements in carrying out a project under the Airport Improvement Program (AIP). General procurement standards for equipment and construction contracts within Federal grant programs are described in 2 CFR §§ 200.317-200.326. Labor and Civil Rights Standards applicable to the AIP are established by the Department of Labor (www.dol.gov) AIP Grant Assurance C.1—General Federal Requirements identifies all applicable Federal Laws, regulations, executive orders, policies, guidelines and requirements for assistance under the AIP. Sponsors may use state and local procedures provided procurements conform to these federal standards.

This certification applies to all equipment projects. Equipment projects may or may not employ laborers and mechanics that qualify the project as a "covered contract" under requirements established by the Department of Labor requirements. Sponsor shall provide appropriate responses to the certification statements that reflect the character of the project.

Certification Statements

Except for the certification statement below marked as not applicable (N/A), this list includes major requirements for this aspect of project implementation. This list is not comprehensive nor does it relieve the sponsor from fully complying with all applicable statutory and administrative standards.

1. A written code or standard of conduct conforming to 2 CFR § 200.319 is or will be in effect governing the performance of the sponsor's officers, employees, or agents in soliciting, awarding and administering procurement contracts.

   ☒ Yes ☐ No ☐ N/A

2. For all contacts, qualified and competent personnel are or will be engaged to perform contract administration, engineering supervision, construction inspection, and testing in accordance with grant assurance C.17.

   ☒ Yes ☐ No ☐ N/A

3. Sponsors that have or are required to have a Disadvantage Business Enterprise (DBE) program on file with the FAA have included or will include clauses required from Title VI of the Civil Rights Act and 49 CFR 23 and 49 CFR 26 for Disadvantaged Business Enterprises in all contracts and subcontracts

   ☒ Yes ☐ No ☐ N/A

4. Sponsor procurement actions using the competitive sealed bid method was or will be:

   a. Publicly advertised, allowing a sufficient response time to solicit an adequate number of interested contractors or vendors.

   b. Prepared to include a complete, adequate and realistic specification that defines the items or services in sufficient detail to allow prospective bidders to respond.

   c. Publicly opened at a time and place prescribed in the invitation for bids

   d. Prepared such that it allows a firm fixed price contract award to the lowest responsive and responsible bidder.

   ☒ Yes ☐ No ☐ N/A

5. For projects where the Sponsor intends to use the competitive proposal procurement method, Sponsor has or will obtain FAA approval prior to proceeding with a competitive proposal procurement by submitting to the FAA the following:

   a. Written request to use competitive proposal procurement method

   b. Written justification that supports use of competitive proposal method in lieu of the preferred sealed bid procurement method.

   ☒ Yes ☐ No ☐ N/A

6. For construction and equipment installation projects, the bid solicitation includes or will include the current federal wage rate determination for the appropriate type of project

   ☒ Yes ☐ No ☐ N/A

7. All construction and equipment installation contracts contain or will contain provisions for:

   a. Access to Records

   b. Buy American Preferences

   c. Civil Rights (General Provisions and Title VI Assurances)

   d. Federal Fair Labor Standards

   e. Occupational Safety and Health Act requirements

   f. Seismic Safety (applies only to projects that include buildings)

   g. State Energy Conservation Requirements (as applicable)

   h. U.S. Trade Restriction

   i. Veterans Preference per 49 USC § 47112(c) (applies only to construction and equipment installation projects)

   ☒ Yes ☐ No ☐ N/A

8. All construction and equipment installation contracts exceeding $2,000 contain or will contain the provisions established by:

   a. Davis-Bacon and Related Acts

   b. Copeland "Anti-Kickback" Act

   ☒ Yes ☐ No ☐ N/A

9. All construction and equipment installation contracts exceeding $3,000 contain or will contain a contract provision that discourages distracted driving

   ☒ Yes ☐ No ☐ N/A

10. All contracts exceeding $10,000 contain or will contain the following provisions as applicable:

    a. Construction and equipment installation projects - Applicable clauses from 41 CFR Part 60 for compliance with Executive Orders 11246 and 11375 on Equal Employment Opportunity.

    b. Construction and equipment installation - Contract Clause prohibiting segregated facilities in accordance with 41 CFR part 60-1.8

    c. All Contracts - Requirement to maximize use of products containing recovered materials in accordance with 2 CFR § 200.322 and 40 CFR part 247.

    d. All Contracts - Provisions that address termination for cause and termination for convenience

    ☒ Yes ☐ No ☐ N/A

11. All contracts exceeding $25,000, an appropriate check of the System for Award Management has been or will be made to assure that contracts or subcontracts are not awarded to those individuals or firms suspended, debarred, or excluded from participating in this federally assisted project

    ☒ Yes ☐ No ☐ N/A

12. Contracts exceeding the simplified acquisition threshold (currently $150,000) include or will include provisions, as applicable, that address the following:

    a. Construction and equipment installation contracts - a bid guarantee of 5%, a performance bond of 100%, and a payment bond of 100%

    b. Construction and equipment installation contracts - requirements of the Contract Work Hours and Safety Standards Act 40 USC 3701-3708), Sections 103 and 107

    c. All contracts, Restrictions on Lobbying and Influencing (2 CFR part 200, Appendix II(J)

    d. All contracts - Conditions specifying administrative, contractual and legal remedies for instances where contractor of vendor violate or breach the terms and conditions of the contract

    e. All Contracts - Applicable standards and requirements issued under Section 306 of the Clean Air Act (42 USC 7401-7671q), Section 508 of the Clean Water Act (33 USC 1251-1387, and Executive Order 11738

    ☒ Yes ☐ No ☐ N/A

13. Concurrence was or will be obtained from the Federal Aviation Administration (FAA) prior to contract award under any of the following circumstances:
    a. Only one qualified person/firm submits a responsive bid
    b. The contract is to be awarded to other than the lowest responsible bidder
    c. Life cycle costing is a factor in selecting the lowest responsive bidder
    d. Proposed contract prices are more than 10% over the sponsor's cost estimate

☒ Yes ☐ No ☐ N/A

Additional documentation for any above item marked "no":

Sponsor's Certification

I certify, for the project identified herein, responses to the forgoing items are accurate as marked and additional documentation for any item marked "no" is correct and complete.

I declare under penalty of perjury that the foregoing is true and correct. I understand that knowingly and willfully providing false information to the federal government is a violation of 18 USC § 1001 (False Statements) and could subject me to fines, imprisonment, or both.

Executed on this 23rd day of February, 2016.

Name of Sponsor: City of Cottonwood

Name of Sponsor's Designated Official Representative: Morgan Scott

Title of Sponsor's Designated Official Representative: Development Services Operations Manager

Signature of Sponsor's Designated Official Representative: _____

Construction Project Final Acceptance
Airport Improvement Program Sponsor Certification

Sponsor:	City of Cottonwood
Airport:	(P52) Cottonwood Airport
Project Number:	3-04-0012
Description of Work:	Construct Apron Reconstruction

Application

49 USC § 47105(d), authorizes the Secretary to require certification from the sponsor that it will comply with the statutory and administrative requirements in carrying out a project under the Airport Improvement Program. General standards for final acceptance and close out of federally funded construction projects are in 2 CFR § 200.343 - Closeout. The sponsor shall determine that project costs are accurate and proper in accordance with specific requirements of the grant agreement and contract documents.

Certification Statements

Except for the certification statement below marked as not applicable (N/A), this list includes major requirements for this aspect of project implementation. This list is not comprehensive nor does it relieve the sponsor from fully complying with all applicable statutory and administrative standards.

1. The personnel engaged in project administration, engineering supervision, construction inspection and testing were or <u>will be</u> determined to be qualified as well as competent to perform the work.

   ☒ Yes ☐ No ☐ N/A

2. Daily construction records were or <u>will be</u> kept by the resident engineer/construction inspector as follows:

   a. Work in progress
   b. Quality and quantity of materials delivered
   c. Test locations and results
   d. Instructions provided the contractor
   e. Weather conditions
   f. Equipment use
   g. Labor requirements
   h. Safety problems
   i. Changes required

   ☒ Yes ☐ No ☐ N/A

3. Weekly payroll records and statements of compliance were or will be submitted by the prime contractor and reviewed by the sponsor for conformance with federal labor and civil rights requirements as required by FAA and U.S. Department of Labor.

   ☒ Yes ☐ No ☐ N/A

4. Complaints regarding the mandated federal provisions set forth in the contract documents have been or will be submitted to the Federal Aviation Administration (FAA).

   ☒ Yes ☐ No ☐ N/A

5. All tests specified in the plans and specifications were or will be performed and the test results documented as well as made available to the FAA.

   ☒ Yes ☐ No ☐ N/A

6. For any test results outside of allowable tolerances, appropriate corrective actions were or will be taken.

   ☒ Yes ☐ No ☐ N/A

7. Payments to the contractor were or will be made in compliance with contract provisions as follows:

   a. Payments are verified by the sponsor's internal audit of contract records kept by the resident engineer, and
   b. If appropriate, pay reduction factors required by the specifications are applied in computing final payments and a summary of pay reductions made available to the FAA.

   ☒ Yes ☐ No ☐ N/A

8. The project was or will be accomplished without significant deviations, changes, or modifications from the approved plans and specifications, except where approval is obtained from the FAA.

   ☒ Yes ☐ No ☐ N/A

9. A final project inspection was or will be conducted with representatives of the sponsor and the contractor, and project files contain documentation of the final inspection.

   ☒ Yes ☐ No ☐ N/A

10. Work in the grant agreement was or will be physically completed and corrective actions required as a result of the final inspection are completed to the satisfaction of the sponsor.

    ☒ Yes ☐ No ☐ N/A

11. If applicable, the as-built plans, an equipment inventory, and a revised airport layout plan have been or will be submitted to the FAA.

    ☒ Yes ☐ No ☐ N/A

12. Applicable close out financial reports have been or will be submitted to the FAA.

    ☒ Yes ☐ No ☐ N/A

13. The construction of all buildings have complied or will comply with the seismic construction requirements of 49 CFR § 41.120.

☐ Yes ☐ No ☒ N/A

Additional documentation for any above item marked "no":

Sponsor's Certification

I certify, for the project identified herein, responses to the forgoing items are accurate as marked and additional documentation for any item marked "no" is correct and complete.

I declare under penalty of perjury that the foregoing is true and correct. I understand that knowingly and willfully providing false information to the federal government is a violation of 18 USC § 1001 (False Statements) and could subject me to fines, imprisonment, or both.

Executed on this 23rd day of February, 2016.

Name of Sponsor: City of Cottonwood

Name of Sponsor's Designated Official Representative: Morgan Scott

Title of Sponsor's Designated Official Representative: Development Services Operations Manager

Signature of Sponsor's Designated Official Representative: _____

TITLE VI PRE-AWARD SPONSOR CHECKLIST

Airport/Sponsor: (P52) Cottonwood Airport / City of Cottonwood, AZ

AIP #: 03-04-0012

Project Description(s): Construct Apron Reconstruction

1) **Please describe any of the following IF they apply to your project: Title VI issues raised at public hearing(s) and the conclusions made; EIS data concerning the race, color, or national origin of the affected community; steps taken or proposed to guard against unnecessary impact on persons on the basis of race, color or national origin.**
   ☒ **None**

2) **Please list any airport related Title VI lawsuits or complaints filed in the preceding year against the sponsor. Include a summary of the findings.**
   ☒ **None (If "None", continue with questions 3 and 4).**

3) **Please list any current applications for federal funding (other than FAA) of airport related projects which exceed the amount for this grant.**
   ☒ **None**

4) **Please list any airport related Title VI compliance review(s) received by the sponsor in the preceding two years. Include who conducted the review and any findings of noncompliance.**
   ☒ **None**

To be completed by the Civil Rights Staff

Review completed and approved: Iris Dobler
Signature

Date: 12-16-15

This checklist is only required for projects that involve one of the following: Environmental Assessment or Impact Statement (EIS); airport or runway relocation; major runway extension; relocation of any structure of person; or impact to access or preservation of any burial ceremonial or other sacred or historical structures or lands of any indigenous or ethnic population.

Return to: FAA, Civil Rights, Northwest Mountain Region; 1601 Lind Ave. SW; Renton, WA 98057-3356. FAX: (425) 227-1009 Phone (425) 227-2009

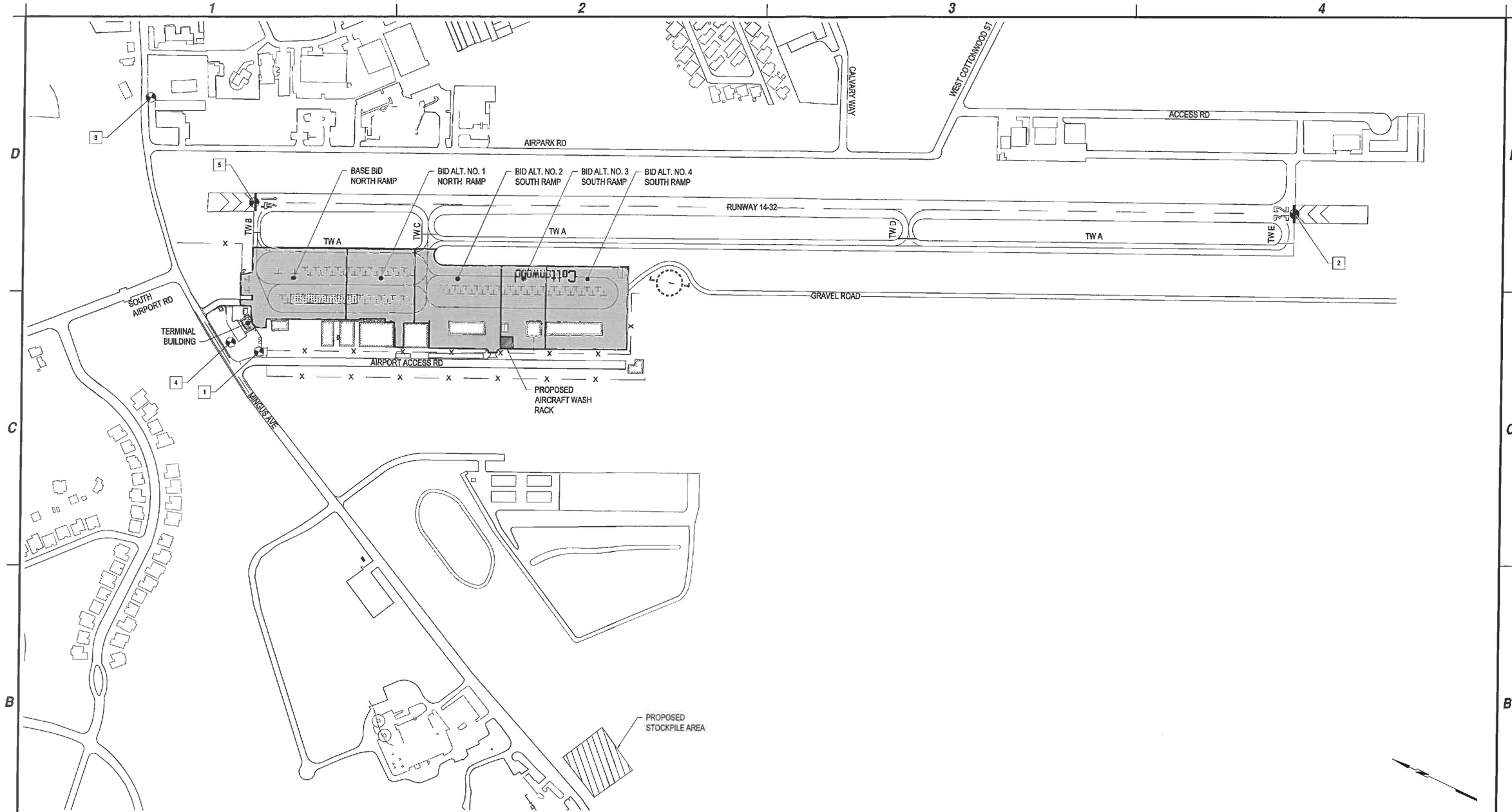

B1 GENERAL PLAN
SCALE: 1" = 200'-0"

NO.	NAME	NORTH	EAST	ELEV.	CODE
1.	1000	48999.617	33009.824	3534.63	CPR 2" AL CAP RLS 27253
2.	5001	45410.241	35309.820	3559.805	GVT BV 0.07' BELOW PVMT
3.	5010	49850.469	33763.558	3498.087	CPR 5/8" PL CAP LS 13015
4.	5012	49121.680	32995.808	3528.127	CPR 5/8" PL CAP LS 13015
5.	5013	49282.064	33553.789	3519.008	GVT BC 0.08' BELOW PVMT

NOTE: CONTRACTOR SHELL PROTECT ALL CONTROL POINTS. IF DISTURBED, MINIMUM CHARGE FOR REPLACEMENT SHALL BE $10,000 PER POINT LOCATION.

SURVEY WAS PERFORMED BY SHEPHARD WESNITZER. INC ON FEBRUARY 1, 2016.

A1 PROJECT CONTROL POINTS
SCALE: NOT TO SCALE

A3 NOT USED
SCALE: NOT TO SCALE

A4 NOT USED
SCALE: NOT TO SCALE

C&S
9200 E
Sco

APRON RECONSTRUCTION AND REHABILITATION PROJECT

MARK	DATE	
		RE

PROJECT NO: K7
DATE: AP
DRAWN BY: GT
DESIGNED BY: RDG
CHECKED BY: RDG

GEN
PI

G-
4

Apr 14, 2016 – 9:13am
F:\Project\K72 – City of Cottonwood, AZ\K72002001 – Apron Rehabilitation\Design\CADD\Sheet Files\K72002001_4_G-101 GENERAL PLAN.dwg

RESOLUTION NUMBER 2852

A RESOLUTION OF THE MAYOR AND CITY COUNCIL OF THE CITY OF COTTONWOOD, ARIZONA, APPROVING A GRANT AGREEMENT WITH THE UNITED STATES OF AMERICA, ACTING THROUGH THE FEDERAL AVIATION ADMINISTRATION (FAA) FOR RECONSTRUCTION OF A PORTION OF THE AIRPORT APRON AT THE COTTONWOOD AIRPORT.

WHEREAS, the FAA has approved the grant agreement for the City for reconstruction of a portion of the airport apron at the Cottonwood Airport for a maximum obligation in the amount of $962,954, under airport improvement program Project No. 3-04-0012-017-2016.

NOW, THEREFORE, BE IT RESOLVED BY THE MAYOR AND CITY COUNCIL OF THE CITY OF COTTONWOOD, ARIZONA:

THAT, the Agreement with the FAA for the above said grant project is hereby approved, and the Mayor is authorized and empowered to execute the Grant Agreement, and the Airport Manager is authorized to accept the grant and directed to carry out the intent of the Agreement on behalf of the city.

PASSED AND ADOPTED BY THE CITY COUNCIL AND APPROVED BY THE MAYOR OF THE CITY OF COTTONWOOD, ARIZONA, THIS 6TH DAY OF SEPTEMBER 2016.

_____
Diane Joens, Mayor

APPROVED AS TO FORM:

_____
Steven B. Horton, Esq.
City Attorney

ATTEST:

_____
Marianne Jiménez, City Clerk

City of Cottonwood, Arizona
City Council Agenda Communication

Print

Meeting Date:	September 6, 2016
Subject:	Acceptance of Scope of Work to provide Construction Administration for the Airport Apron Reconstruction Project
Department:	Development Services
From:	Morgan Scott, Development Services Manager

REQUESTED ACTION

Consider approval of the scope of work with C&S Companies for the Construction Administration of the Airport Apron Reconstruction Project.

SUGGESTED MOTION

If the Council desires to approve this item the suggested motion is:

I move to approve the scope of work with C&S companies for the Construction Administration of the Airport Apron Reconstruction Project pending final award of the grant by the FAA.

BACKGROUND

The City Council may be aware that the Airport Apron is approaching the end useful lifespan. In August of 2014, ADOT conducted a study and produced a Pavement Management Report for the City of Cottonwood Airport. Bids for the 1st and 2nd phase of the project came in at $917,495 and the FAA has tentatively awarded the grant.

The City Council approved an extension of an on call contract with CnS Engineers at the regular Council meeting on October 6, 2015. Approving staff to authorize this scope of work will allow CnS to proceed under the existing contract.

JUSTIFICATION/BENEFITS/ISSUES

The Airport Apron is in poor condition and this project will either reconstruct the entire apron or repair it to like new condition. The construction administration contract will provide expertise from a company familiar with federal airport projects.

COST/FUNDING SOURCE

91% FAA funded

4.5% ADOT funded

4.5% City funded (Airport Funds and General Fund)

ATTACHMENTS:		
Name:	Description:	Type:
FINAL_SIGNED_Agreement__7-3-13.pdf	On call Contract with CnS	Cover Memo
Cottonwood_Auth_4_contract.pdf	Proposed scope of Work	Cover Memo
ADOT_approval.pdf	ADOT Approval of scope	Cover Memo

City of Cottonwood, Arizona

NOTICE OF FORMAL SOLICITATION

SOLICITATION TYPE:	**REQUEST FOR QUALIFICATIONS**
SERVICES SOUGHT:	**On call Airport Consultant Design Services**
SOLICITATION INVITATION NO.:	**2012-PW-?**
RESPONSE DUE DATE AND TIME:	**? at 2:00 pm local Arizona time**
LOCATION:	**City of Cottonwood** **Administrative Services Department** **Purchasing Manager** **816 N. Main Street** **Cottonwood, Arizona 86236**

Notice is hereby given that the City of Cottonwood, (hereinafter referred to as "City") is soliciting Statements of Qualifications from Consultant Firms, in accordance with Arizona Revised Statutes (A.R.S.) Title 34 and with Chapter 2 of the Federal Aviation Administration (FAA) Advisory Circular 150/5100-14D for on call airport design services for projects that involve, but are not limited to: the design, application and construction monitoring of airport improvements such as; Automated Weather Observation Systems (AWOS), terminal parking lot, airport layout plan, airport miscellaneous studies, land acquisition(s), aircraft hangars, runways, taxiways, ramps, access roads, airfield security, lighting and signing, and navaids. Also services include, but are not limited to: Consultant, civil Consultant, electrical Consultant, surveying, geotechnical Consultant, environmental planning and security planning. In this Request for Statements of Qualification (RFQ) the City is seeking professional services associated with airport design Consultant services (hereinafter "Services"). This is a "one-step" qualifications-based selection process for "Professional Services" pursuant to A.R.S. § 34-601 *et seq.* The initial activity will involve an evaluation and ranking of Consultant' qualifications and experience with similar projects through a review and evaluation of qualifying Statements of Qualifications. The City, at its sole discretion, may make its determination of the final list and rank of the final list solely on the Statements of Qualifications review and evaluation or the City may select three (3) to five (5) of the highest ranked Consultant for interviews and make its determination of the final list and ranking of the final list on the combined results of the Statements of Qualifications review and evaluation and the interview.

The term of this contract will be one (1) year with three (3) one-year renewal options. However, services will be requested on an as-needed, if- needed basis and the resultant contract is neither exclusive nor a commitment by the City that the Consultant's services will be required.

Solicitation documents are available by email by contacting the Purchasing Division at (928) 340-2714 or hard copies can be picked up at the City of Cottonwood, Administrative Services Department located at 816 N Main Street, Cottonwood, AZ 86326. Documents can also be obtained through the Public Purchase website at www.publicpurchase.com.

Proposers are invited to review the information and to submit their Statements of Qualifications in accordance with the criteria established within this Request for Qualifications (RFQ). All questions regarding this RFQ must be received in **writing** by the City of Cottonwood Purchasing Department no later than 72 business hours prior to the due date and time specified below and may be emailed to Lisa Elliot at lelliot@cottonwoodaz.gov with a copy to Morgan Scott at mscott@cottonwoodaz.gov . Questions will then be responded to by written addenda to this document. **Any oral questions, answers, statements or instructions shall not in any way constitute an amendment to this RFQ.**

Responses to this solicitation will be received by the Purchasing Division, City of Cottonwood, 816 N. Main Street, Cottonwood, Arizona 86236, until the time and date cited above. Responses received by the correct time and date will be opened publicly at the Purchasing Division Office.

Responses must be submitted in a sealed envelope with the solicitation invitation number and the Applicant's name and address clearly indicated on the envelope. All responses must be completed in ink or typewritten. Additional instructions for preparing your responses are provided on the following pages.

Responses must be in the actual possession of the Purchasing Division Office and stamped by a member of the Administrative Services staff on or prior to the exact time and date indicated above. Late responses or unsigned responses **will not** be considered under any circumstances.

The City of Cottonwood reserves the right to reject any or all responses, or to withhold the award for any reason it may determine, and to waive or not to waive any informalities in any response. All information regarding the content of the specific responses will remain confidential until a contract is finalized or all responses are rejected.

A qualification based selection process conforming to FAA Advisory Circular 150/5100-14d will be utilized to select the most qualified firm. Fee information will not be considered in the selection process and must not be submitted with the statement of qualifications.

Fees will be negotiated for projects as federal funds become available and projects determined eligible.

Prospective Consultants are advised that applied overhead rates must be in accordance with the cost principals established within Federal Regulation 48 CFR Part 31, *Contract Cost Principles and Procedures.* The successful firm will be required to submit a copy of their current overhead rate audit certification.

Publish Date: Verde Independent – ?
PUBLISHERS AFFIDAVIT REQUIRED

APPLICANT'S CHECK LIST

☐ 1. The response has been signed in the Offer Section (responses not signed in this section will not be considered).

☐ 2. Any required descriptive literature have been included.

☐ 3. The Addendum Acknowledgement has been signed and is included.

☐ 4. The Non-Collusion Affidavit has been signed and is included.

☐ 5. The Disclosure of Responsibility Statement has been signed and is included.

☐ 6. The Certificate of Insurability has been signed and is included.

☐ 7. The Consultant Immigration Warranty has been signed and is included.

☐ 8. The mailing envelope/package has been addressed to:

Location:
City of Cottonwood
Administrative Services Department
Purchasing Division
816 N. Main Street
Cottonwood, AZ 86236

☐ 9. Response package/envelope has been identified with solicitation number and title.

☐ 10. The response is mailed in time to be received and stamped in by a Purchasing representative no later than specified time on designated date (otherwise the response cannot be considered).

INFORMATION AND INSTRUCTIONS TO APPLICANT

1. REQUEST FOR QUALIFICATIONS (RFQ)

The City of Cottonwood (hereinafter "City ") is accepting Statements of Qualifications (SOQ) from qualified Consultants/architects/planners/engineers registered in the State of Arizona (hereinafter " Consultant") interested in providing professional services (hereinafter "Services") associated with improvements to the Cottonwood Airport (P52) located at 1001 W Mingus Ave, Cottonwood, AZ 86326. The Services may include but are not limited to those projects listed in Appendix A: Cottonwood Airport Capital Improvement Plan (ACIP) and design, application process, drafting, consultation, research and analysis, siting considerations, inspection and long-term planning of the airport and related appurtenances.

2. GENERAL INFORMATION

3.1. Late Responses. Late responses and/or unsigned responses will not be considered under any circumstances. Envelopes containing responses with insufficient postage will not be accepted by City. It is the sole responsibility of the Applicant to see that their response is delivered and received by the proper time and at the proper place.

3.2. Project Details. Further description of the project components and deliverables is contained in the Scope of Work attached to the proposed Contract.

3.3. Sealed Envelope or Package. Each response shall be submitted to the Purchasing Division in a sealed envelope or package. The envelope or package should be clearly identified as a response and be marked with name of the Applicant and solicitation number. City may open envelopes or package to identify contents if the envelope or package is not clearly identified as specific.

3.4. Statement Amendment or Withdrawal. A response may be withdrawn anytime before the response due date and time. A response may not be amended or withdrawn after the response due date and time except as otherwise provided by applicable law.

3.5. Public Record. All responses submitted in response to this solicitation and all evaluation related records shall become property of City and shall become a matter of public record for review, subsequent to publication by the City Clerk of the proposed award in the agenda for the City Council Meeting or award by the appropriate approving authority or otherwise provided by law.

3.6. Confidential Information. If an Applicant believes that any portion of a submittal, offer, specification, protest, or correspondence contains information that should be withheld, the Purchasing Manager should be so advised in writing. The City shall review all requests for confidentiality and provide a written determination. If the confidential request is denied, such information shall be disclosed as public information, unless the person utilizes the Protest Procedure.

3.6.1. Request for nondisclosure of data such as trade secrets and other proprietary data, must be made known to City in responses submitted and the information sought to be protected clearly marked as proprietary.

3.6.2. City will not ensure confidentiality of any portion of the solicitation documents that are submitted in the event that a public record request is made.

3.6.3. City will provide forty-eight (48) hours notice before releasing materials identified in the response as confidential or proprietary in order for the Applicant to apply for a court order blocking the release of the information.

3.7. **Cost of Response Preparation.** City will not reimburse any Applicant the cost of responding to this RFQ.

3.8. **Persons with Disabilities.** Persons with a disability may request a reasonable accommodation, such as a sign language interpreter, by contacting the Purchasing Manager. Requests shall be made as early as possible to allow time to arrange the accommodation.

3.9. **Consultant Registration.** Consultants (Applicants) are encouraged to register via the on-line Consultant registration system at www.publicpurchase.com, in order to automatically receive notification of Solicitation Addendum or notice of other solicitation opportunities. Select REGISTER OR LOG-IN NOW. A Consultant who is not so registered must contact the Purchasing Office to make other arrangements to receive notice of Addenda to this Solicitation. Consultants who submit proposals without acknowledgement of addenda may have their responses rejected.

4. RESPONSE PREPARATION

4.1. **Format.** Applicants shall submit their response with an original and six (6) copies and shall provide the information and comply with the requirements listed below. The sections of the submittal should be tabbed, clearly identifiable, and correspond with the evaluation criteria. **SUBMITTALS SHOULD BE BOUND BY BINDER CLIP AND SHOULD CONSIST OF PAPER ONLY. ALL BINDERS, PLASTIC SEPARATORS, NON-RECYCLABLE MATERIAL, ETC., ARE DISCOURAGED. SUBMITTALS WILL NOT BE EVALUATED ON THE AESTHETIC OF THE PACKAGE.**

4.2. **No Facsimile or Electronic Mail Statements.** Responses may not be submitted in facsimile or electronically. A facsimile or electronic mail statement shall be rejected.

4.3. **Typed or Ink Corrections. The response shall be typed or in ink. Erasures, interlineations or other modifications in the response shall be initialed in ink by the person signing the response.**

4.4. **No Modifications.** Modifications shall not be permitted after responses have been opened except as otherwise provided under applicable law.

4.5. **Content.** The narrative portion and the materials presented in response to this Request for Qualifications shall be submitted in the same order as requested and must contain, at a minimum, the following:

4.5.1. Budget and Schedule Compliance Experience – maximum 30 points

4.5.1.1. Demonstrate the Ability of the Firm and each of the other listed team members to complete projects within established budgets and schedule. Identify the originally established budgets and schedule, and the final actual cost and schedule, for each of the relevant projects, which the proposer has identified in the SOQ

4.5.1.2. The Proposer may list additional comparable projects which establish the Proposer's and the Team's budget management experience.

4.5.1.3. Identify the names and telephone numbers of client user groups and/or facilities management contacts with the personal knowledge of the projects, which the Proposer has identified in the SOQ as an example of schedule compliance experience.

4.5.2. Experience and Qualifications of the Team – maximum 30 points

4.5.2.1. For each key person identified to participate in this work, list at least two (2) comparable airport projects in which they have played a role similar to that proposed for these projects.

- Description of project.

- Role of the person.
- Project's total construction cost.
- Construction schedule verses deadline.
- Project Owner reference information.
- Change Orders

4.5.2.2. Identify the home office location of key staff who will be assigned to job order projects and the percentage of their time expected to be devoted to job order projects.

4.5.2.3. List any proposed sub Consultant, including key staff names and the experience and qualifications of these individuals. Explain how these key staff personnel have sufficient experience to service this proposed contract.

4.5.3. Experience of the Applicant on Similar Projects – maximum 20 points

4.5.3.1. List all projects with a value ranging from $5,000 to $1,000,000 either on-going or completed within the past three (3) years.

4.5.3.2. Identify at least five (5) projects in which the Applicant played a major role. The projects listed should show the breadth of the Applicant's consulting experience and demonstrated capabilities in managing multiple airports Consultant and planning projects.

4.5.3.3. For each comparable project identified above, provide:

- The description of project.
- Role of the Applicant either as prime or sub Consultant.
- Total cost of the Applicant's portion of the project.
- Construction schedule verses deadline.
- Project Owner reference information.

4.5.4. Experience with Airport Consultation – maximum 20 points

4.5.4.1. Indicate knowledge, training, and/or experience specifically with airport Consultant and architectural services with public/government entities or private firms.

4.5.4.2. List current and/or past airport Consultant and architectural services contracts, including description, customer name, contract time period, total contract amount, number of individual scopes per contract, range of scope amounts (i.e. $5,000 - $1,000,000).

4.5.5. Sub Consultant. Submittals must include a proposed Sub Consultant Selection Plan, in accordance with A.R.S., Title 34, Chapter 6. Plans shall be submitted as a separate document within the statement of qualifications. The negotiated plan of the successful Applicant will be incorporated into the final contract.

4.5.6. Exceptions to Solicitation. The proposed form of contract, Scope of Services and General Conditions for Construction are included as a part of this solicitation. The Applicant must include a statement that the Applicant has reviewed said documents and list any objections to the same. Any objections to the form of contract will be considered and included in City's evaluation of the Applicant's response. If the Applicant fails to list any objections to the form of contract, the Applicant will not be allowed to raise any objections later if selected for award. A response that takes exception to a material requirement of any part of the solicitation or contract may be rejected as non-responsive upon the decision of the City.

The provisions of the Request for Qualifications cannot be modified without the express written approval of the Administrative Services General Manager or their designee. Proposed modifications or exception to the indemnification language herein shall not be considered. If an offer is returned with modifications to the contract provisions that are not expressly approved in writing by Administrative Services General Manager or their designee, the contract provisions contained in the City's Request for Qualifications shall prevail.

4.5.7. Disclosure. If the firm, business or person submitting this response has been debarred, suspended or otherwise lawfully precluded from participating in any public procurement activity, including being disapproved as a sub Consultant with any Federal, state or local government, or if any such preclusion from participation from any public procurement activity is currently pending, the Applicant shall fully explain the circumstances relating to the preclusion or proposed preclusion in the response. The Applicant shall include a letter with its response setting forth the name and address of the governmental entity, the effective date of this suspension or debarment, the duration of the suspension or debarment, and the relevant circumstances relating to the suspension or debarment. If suspension or debarment is currently pending, a detailed description of all relevant circumstances including the details enumerated above shall be provided.

4.6. Financial Statement. The Applicant shall furnish, upon request, two (2) copies of the Applicant's most recent financial statement and/or other evidence of qualifications as may be requested by City. If an Applicant fails to furnish in a timely manner the information requested, it shall be considered sufficient grounds for rejection of such Applicant's entire response. A financial statement must be notarized by a Notary Public licensed in the Applicant's state of business.

4.7. Non-Collusion and Non-Discrimination. By signing and submitting the response, the Applicant certifies that:

4.7.1. The Applicant did not engage in collusion or other anti-competitive practices in connection with the preparation or submission of its response, and

4.7.2. The Applicant does not discriminate against any employee or applicant for employment or person to whom it provides services because of race, color, religion, age, sex, national origin, or disability, and that it complies with all applicable Federal, state and local laws and executive orders regarding employment.

4.7.3. The Applicant understands that the Applicant will be responsible for and shall pay all sales, consumer, use, and other taxes. When equipment, materials or supplies generally taxable to the Applicant are eligible for a tax exemption due to the nature of the item, Applicant shall assist City in applying for and obtaining such tax credits and exemptions which shall be paid or credited to City.

5. INQUIRIES

5.1. Duty to Examine. It is the responsibility of each Applicant to examine the entire solicitation, seek clarification (inquiries), and examine its response for accuracy before submitting the response. Lack of care in preparing a response shall not be grounds for modifying or withdrawing the response after the response due date and time, nor shall it give rise to any Contract claim.

5.2. Contact Person. Any inquiry related to this solicitation, including any requests for or inquiries regarding standards referenced in the solicitation should be submitted in writing no later than seventy-two (72) business hours prior to the due date and time cited above and may be emailed to Morgan Scott at mscott@cottonwoodaz.gov and Lisa Elliott, Purchasing Manager at lelliott@cottonwoodaz.gov.

5.3. Submission of Inquiries. All inquiries shall be submitted in writing and shall refer to the appropriate solicitation number, page and paragraph. Do not place the solicitation number on the outside of the envelope containing that inquiry since it may then be identified as a response and not be opened until after

the response due date and time. City shall consider the relevancy of the inquiry but is not required to respond in writing.

5.4. **Timeliness.** Any inquiry or exception to the solicitation shall be submitted as soon as possible and shall be submitted at least seventy-two (72) business hours before the response due date and time for review and determination by City. Failure to do so may result in the inquiry not being considered for a Solicitation Addendum.

5.5. **No Right to Rely on Verbal Responses.** An Applicant shall not rely on verbal responses to inquiries. A verbal reply to an inquiry does not constitute a modification of the solicitation.

6. EVALUATION

6.1. All submittals shall be evaluated in accordance with A.R.S. Title 34, Chapter 6 and the evaluation criteria stated herein. The evaluation process and contract award shall include the following:

6.1.1. A selection committee will evaluate the submittals and score them in accordance with the evaluation criteria listed in the Section 6.4, Selection Criteria. Applicants will be ranked according to their combined scores.

6.2. **Disqualification.** An Applicant (including each of its principals) who is currently debarred, suspended or otherwise lawfully prohibited from any public procurement activity may have its response rejected.

6.3. **Clarifications.** City reserves the right to obtain Applicant clarifications where necessary to arrive at full and complete understanding of an Applicant's qualifications and experience and/or solicitation response. Clarification means a communication with an Applicant for the sole purpose of eliminating ambiguities in the response and does not give an Applicant an opportunity to revise or modify its response.

6.4. **Selection Criteria.** Evaluation of the qualifications and experience responses will be undertaken by a committee with the following criteria and weighted scores:

Evaluation Criteria	Maximum Score
Budget and Schedule Compliance Experience	30
Experience and Qualifications of the Team	30
Experience of the Applicant Similar Airports	20
Experience with airport Consultant/planning consultant services	20
Total Points Possible	100

6.5. **Additional Investigations.** The City reserves the right to make such additional investigations as it deems necessary to establish the competency and financial stability of any Applicant submitting a response to this Request for Qualifications.

6.6. **Prior Experience.** Experiences with the City and entities that evaluation committee members represent may be taken into consideration when evaluating qualifications and experience.

6.7. **Waiver and Rejection Rights.** City reserves the right to reject any or all responses or to cancel the solicitation altogether, to waive any informality or irregularity in any response received, and to be the sole judge of the merits of the respective Applicants.

7. OFFER AND ACCEPTANCE PERIOD

In order to allow for an adequate evaluation, the City requires an offer in response to this solicitation to be valid and irrevocable for ninety (90) days after the opening time and date.

8. AWARD

8.1. **Number of Contracts to be Awarded.** The City intends to award one (1) contract for the services described herein.

8.2. **Upon Notice of Intent to Award.** The apparent successful Applicant(s) shall sign and file with the City, within ten (10) days after Notice of Intent to Award, all documents necessary to the successful execution of the contract, including but not limited to, bonds (if required), the construction agreement and certificates of insurance.

9. PROTESTS

9.1. A protest must be in writing and be filed with the Purchasing Division. A protest of a solicitation shall be received before the solicitation opening date. A protest of a proposed award must be filed in writing before City Council meeting at which the recommendation will be presented. If the award is less than $50,000, City Council approval is not needed and protests must be submitted within ten (10) days after the protestor knows or should have known the basis of the protest. City shall determine whether to issue a written response or hold an administrative hearing.

9.2. **A protest must include:**

The name, address and telephone number of the protester;
The signature of the protester or its representative;
Identification of the project and the solicitation or contract number;
A detailed statement of the legal and factual grounds of the protest including copies of relevant documents; and
The form of relief requested.

10. COMMENTS WELCOME

The City's Purchasing Division periodically reviews the Information and Instructions to Applicant and welcomes any comments you may have. Please submit your comments to: City of Cottonwood Finance Department, Purchasing Division, 816 N. Main Street, Cottonwood, AZ 86326.

SPECIAL TERMS AND CONDITIONS

1. **Number of Contracts to be Awarded.** The City intends to award one (1) contract for the services described herein.

2. **Contract Term and Renewal.** The term of this contract shall commence upon award and shall remain in effect for a period of one (1) year, unless terminated, canceled or extended as otherwise provided herein. The Consultant agrees that the City of Cottonwood shall have the right, as its sole option, to renew the contract for three (3) additional one (1) year periods, or portions thereof. If the City chooses to exercise this option, all terms, conditions, and provisions of the original contract shall remain the same and apply during the renewal period with the possible exception of fee basis and minor scope additions and/or deletions.

3. **Performance Rating.** At the completion of each term or termination of this contract, the City may evaluate the Consultant based on performance under this contract. This rating may be used in the overall evaluation of the Consultant when applying for future work with the City. The performance rating may be forgone if the consultant's work is satisfactory.

7. **Audit and Inspection of Records.** The Consultant shall permit the authorized representatives of the City of Cottonwood to inspect and audit any books, documents, papers, data and records relating to its performance under the contract until the expiration of three (3) years after final payment under this contract. The City shall have the right to audit and/or examine such records at any time during the progress of this contract and shall withhold payment if such documentation is found by the City to be incomplete or erroneous.

   The following access to records requirements apply to this contract:

   > The Consultant agrees to provide the City of Cottonwood or any of its authorized representative's access to any books, documents, papers and records of the Consultant which are directly pertinent to this contract for the purposes of making audits, examinations, excerpts and transcriptions. The Consultant agrees to permit any of the foregoing parties to reproduce by any means whatsoever or to copy excerpts and transcriptions as reasonably needed.
   >
   > The Consultant agrees to maintain all books, records, accounts and reports required under this contract for a period of not less than three (3) years after the date of termination or expiration of this contract, except in the event of litigation or settlement of claims arising from the performance of this contract, in which case Consultant agrees to maintain same until the City of Cottonwood or any of its duly authorized representatives have disposed of all such litigation, appeals, claims or exceptions related thereto.

8. **Contract Amendments.** The Administrative Services Department has the sole authority to:

   A) Amend the contract or enter into supplemental verbal or written agreements;
   B) Grant time extensions or contract renewals;
   C) Otherwise modify the scope or terms and provisions of the contract.

   The contract shall only be modified with the approval of the Administrative Services General Manager. Except in the case of documented emergency, approval must be granted prior to performance. Any contract modification not explicitly approved by the Administrative Services General Manager through a written contract amendment or change order is performed at the sole risk of the Consultant and may not be eligible for payment by the City.

9. **Child/Sweat-Free Labor Policy.** The Consultant shall comply with all applicable provisions of the United States Federal and State Child Labor and Worker's Right laws and agrees if called upon to affirm in writing, that they, and any sub Consultant involved in the provision of goods to the City, are in compliance.

10. **Federal Immigration Laws and Regulations.** The Consultant warrants that it complies with all Federal Immigration laws and regulations that relate to its employees and complies with A.R.S. § 23-214(A) and that it requires the same compliance of all sub Consultants under this contract. Consultant acknowledges that pursuant to A.R.S. § 41-4401 and effective September 30, 2008, a breach of this warranty is a material breach of this contract subject to penalties up to and including termination of this contract. The City retains the legal right to

audit the records of the Consultant and inspect the papers of any employee who works for the Consultant to ensure compliance with this warranty and the Consultant shall assist in any such audit. The Consultant shall include the requirements of this paragraph in each contract with sub Consultant under this contract.

If the Consultant or sub Consultant warrants that it has complied with the employment verification provisions prescribed by sections 274(a) and 274(b) of the Federal Immigration and Nationality Act and the E-verify requirements prescribed by A.R.S. § 23-214(A), the Consultant or sub Consultant shall be deemed to be in compliance with this provision. The City may request proof of such compliance at any time during the term of this contract by the Consultant and any sub Consultant.

11. **(ADA) Americans with Disabilities Act.** The Consultant shall comply with all applicable provisions of the Americans with Disabilities Act of 1990 (Public Law 101-336, 42 U.S.C. 12101-12213, 47 U.S.C. 225 and 611, and all regulations thereto), and the Arizonans with Disabilities Act of 1992 (A.R.S. 41-1492 et seq., and all regulations pertaining thereto).

12. **Certification of Compliance with A.R.S. Section 35-397.** By signing this contract, the Consultant certifies that it does not have scrutinized business operations in Iran or Sudan as required by A.R.S. sec. 35-397. If the City determines that the Consultant has submitted a false certification, the City may impose remedies as provided in the Cottonwood Procurement Code up to and including termination of this contract.

13. **City of Cottonwood Business License.** The Consultant shall maintain in current status all Federal, State, and local registrations, licenses and permits, including a City of Cottonwood business registration, required for the operation of the business conducted by the Consultant as applicable to this contract.

14. **Arizona Law.** This contract shall be governed and interpreted according to the laws of the State of Arizona.

15. **Jurisdiction and Venue.** The parties agree that this contract is made in and shall be performed in Yavapai County. Any lawsuits between the Parties arising out of this contract shall be brought in the courts of Yavapai County in the State of Arizona, which shall have exclusive jurisdiction over such lawsuits.

16. **Fees and Costs.** Except as otherwise agreed by the parties, the prevailing party in any adjudicated dispute relating to this contract is entitled to an award of reasonable attorney's fees, expert witness fees and costs including, as applicable, arbitrator fees; provided, however, that no award of attorney's fees shall exceed ten percent (10%) of the damages awarded the prevailing party unless the non-prevailing party has been determined to have acted in bad faith or in a frivolous manner during the adjudication.

17. **Notices.** All notices or demands required to be given pursuant to the terms of this contract shall be given to the other party in writing, delivered by hand or registered or certified mail, at the addresses set forth below, or to such other address as the parties may substitute by written notice given in the manner prescribed in this paragraph.

In the case of CITY:

City of Cottonwood
Public Works Department
Airport Manager
1001 W Mingus Avenue
Cottonwood, AZ 86326
(928) 634-8033 x12

In the case of CONSULTANT:

Company Name: C&S Engineers, Inc.
Contact: Lance McIntosh

Address: 9200 East Pima Center Pkwy., Suite 240
City, State, Zip: Scottsdale, Arizona 85258
Telephone Number: (602) 997-7536

Notices shall be deemed received on date delivered, if delivered by hand, and on the delivery date indicated on receipt if delivered by certified or registered mail.

CITY OF COTTONWOOD
AGREEMENT FOR PROFESSIONAL SERVICES – AIRPORT ONCALL CONSULTANT

THIS AGREEMENT, made and entered into this 21 day of May, 2012, by and between C&S Engineers Inc., hereinafter designated as the CONSULTANT, and the City of Cottonwood, an Arizona municipal corporation, organized and existing under and by virtue of the laws of the State of Arizona, hereinafter designated as the CITY.

WITNESSETH: That said CONSULTANT, for and in consideration of the sums to be paid by the CITY, in the manner and at the time hereinafter provided, and of the other covenants and agreements herein contained, and under the penalties expressed herein, hereby agrees, for their heirs, executors, administrators, successors, and assigns as follows:

ARTICLE I -- SCOPE OF WORK

The CONSULTANT shall furnish any and all labor, materials, equipment, transportation, services, and facilities required to provide certain professional Airport On-call planning/engineering services to the CITY when and as requested, and only when and as requested by the CITY. All requests for planning/Consultant services will be submitted in memorandum form by the City Airport Manager or their authorized designee to the party listed by the CONSULTANT to receive NOTICE under Article IX of this Agreement. The work described below is expected to be accomplished over the course of several separate grant projects. Some of the services described below and the City reserves the right cancel services or initiate additional procurement action for any of the services initiated in the initial procurement.

The services that may be provided under this Agreement include, but shall not be limited to the following:

1. Preparing and/or checking design plans for the design, application and construction monitoring of airport improvements such as:
    - Design and/or Install Automated Weather Observation Systems (AWOS)
    - Design and/or Construct terminal parking lot
    - Design and/or Construct Apron seal or reconstruction project
    - Develop an Airport layout plan
    - Administer land acquisition(s) for future airport growth
    - Design/Rehabilitate Aircraft hangars, shade covers, runways, taxiways, ramps, security fence/gates and access roads
    - Rehabilitate Airfield security
    - Design/Rehabilitate Lighting and signing
    - Conduct Airport Miscellaneous Studies
    - Design Navaids
    - Design and/or Install aircraft wash rack
    - Also provide services including, but are not limited to: Consultant, civil Consultant, electrical Consultant, surveying, geotechnical Consultant, environmental planning and security planning
    - Administer and/or Conduct Environmental Assessments
    - Conduct Miscellaneous study to evaluate airport master plan

2. Consulting services relating to all aspects of airport operation.

3. Construction surveying and land surveying.

4. Construction contract administration.

5. Inspection of construction.

6. Cost estimates of design, Consultant, construction, and other matters as requested.

7. Evaluation of bid proposals.

8. Studies for projects concerning state and federal environmental requirements.

9. Reviewing development proposals as requested.

10. Presentations to the Cottonwood City Council.

11. Any other Consultant services related to airport management requested by the City.

12. Some services may not be required and the City reserves the right to initiate additional procurement action for any of the services included in the initial procurement or conduct the services in house.

13. See the attached Exhibit A: Airport Capital Improvement Plan for an expected schedule and scope of work of projects.

14. The services are limited to those projects that can reasonably be expected to be initiated within five (5) years of the date the contract is signed by the CONSULTANT.

ARTICLE II -- CONTRACT DOCUMENTS

The Request for Proposals, Technical Specifications and Details, Special Provisions, Addenda, if any, as accepted by the City Council, and required Certificates of Insurance, are by this reference made a part of this Agreement to the same extent as if set forth herein in full.

This document constitutes the entire Agreement between the parties with respect to the subject matter hereto and shall supersede all previous proposals, both oral and written, negotiations, representations, commitments, writings, agreements and other communications between the parties. It may not be changed or modified except by and instrument in writing signed by a duly authorized representative of each party.

The CONSULTANT will:

a. Submit all reports and invoices specified in the Scope of Work in this Agreement.

b. Preserve and make available all records for a period of five (5) years from the date of final payment under this Agreement, or such longer period as may be specified by the CITY, and/or for such period as required by any other paragraph of this Agreement including the following:

   i. If this Agreement is completely or partially terminated, the records relating to the work terminated shall be preserved and made available for a period of five (5) years from the date of any such termination;

   ii. Records which relate to disputes, litigation or the settlement of claims arising out of the performance of this Agreement or to costs and expenses of this Agreement to which exception has been taken by the City shall be retained by the CONSULTANT until such

appeals, litigation, claims or exceptions have been finally resolved;

iii. If any litigation, claim or audit is started before the expiration of the five-year period, the records shall be retained until all litigation, claims or audit findings involving the records have been resolved.

ARTICLE III -- CONTRACT TIMES

This Agreement shall be effective on the date of signing by CITY and shall continue through 5/23 20 14. The Agreement may be renewed annually thereafter in the CITY's sole and sound discretion by an action of the City Council, for up to three (3) additional one-year periods.

ARTICLE IV – PAYMENTS

For any Consultant services requested by CITY as described in Article 1 – Scope of Work, the Consultant will submit the total estimated cost of the services to CITY in accordance with the Fee Schedule which is attached to this Agreement and hereby made a part hereof. Upon agreement and acceptance of the proposed cost, CITY will issue a purchase order (if required) or other written notice to the Consultant to commence providing the requested services, or such portion of such services as the CITY may desire. The Consultant shall submit invoices monthly for services provided and CITY will process said invoices through the CITY Finance Department following its normal procedures and timelines.

ARTICLE V- INDEPENDENT CONSULTANT STATUS

For all purposes related to this Agreement, CONSULTANT is and shall operate as an independent Consultant and not as an officer, agent, servant, or employee of the City. CONSULTANT shall be solely responsible for the acts and omissions of its officers, agents, servants, and employees. As an independent Consultant, CONSULTANT is responsible for providing all workers' compensation insurance required by law.

The CONSULTANT understands that the CONSULTANT is responsible to pay, according to law, the CONSULTANT'S income tax. If the CONSULTANT is not a corporation, the CONSULTANT further understands that the CONSULTANT may be liable for self-employment (social security) tax, to be paid by the CONSULTANT according to law.

The CONSULTANT has no authority to enter into contracts or agreements on behalf of the CITY. This Agreement does not create a partnership between the parties, and there are no intended third-party beneficiaries to this Agreement.

The CONSULTANT declares that the CONSULTANT has and will continue to comply fully with all federal, state and local laws regarding business permits, certificates, and licenses that may be required to carry out the work to be performed under this Agreement.

ARTICLE VI -- INDEMNIFICATION AND INSURANCE

A. The CONSULTANT shall indemnify, defend, and save harmless the CITY and any of its agents, officials, and employees, from any and all claims, demands, suits, actions, proceedings, loss, cost, and damages of every kind and description, including any attorney fees and/or litigation expenses, which may be brought or made against or incurred by the CITY on account of loss of or damage to any property, or for injuries to or death of any person caused by, arising out of, or contributed to, by reasons of any negligent act, omission, professional error, fault, mistake, or negligence of the CONSULTANT,

its employees, agents, or representatives, or sub Consultants, their employees, agents, or representatives, in connection with, or incident to the performance services under this Agreement, or arising out of Worker's Compensation claims of employees of the CONSULTANT and/or its sub Consultants, or claims under similar such laws or obligations. The CONSULTANT'S obligation under this section shall not extend to any liability caused by the sole negligence of the CITY or its employees.

B. The CONSULTANT shall provide and maintain, and cause its sub Consultants to provide and maintain, the following minimum insurance coverage:

1. Commercial general liability insurance with a minimum each occurrence and a general aggregate of one million dollars ($1,000,000) each occurrence. The policy shall include coverage for bodily and personal injury, broad form property damage, blanket contractual, CONSULTANT'S protective, and products and completed operations.

2. Comprehensive automobile liability insurance with a combined single limit for bodily injury and property damage of not less than one million dollars ($1,000,000) each occurrence with respect to CONSULTANT'S vehicles (whether owned, hired, non-owned), assigned to or utilized in the performance of a Contract.

3. Worker's Compensation (statutory limits), and Employer's Liability Insurance ($500,000 each occurrence).

4. Professional liability insurance covering damages resulting from errors or omissions of the Consultant, its directors, officers, employees, agents and any other persons for whom it is legally responsible. The limit of liability shall be not less than $1,000,000.

The Consultant shall name CITY, its agents, officials and employees as Additional Insured's (except for Professional Liability and Workers Compensation Insurance, to which this requirement does not apply) and shall specify that the insurance afforded by the Consultant shall be primary insurance and that any insurance coverage carried or self-insurance of the CITY, or any employee shall be excess coverage and not contributory insurance to that provided by the Consultant. Said policy shall contain a severability of interests provision. CITY reserves the right to continue payment of premium for which reimbursement shall be deducted from amounts due or subsequently due Consultant.

The Consultant shall provide the CITY with Certificates of Insurance with Additional Insured endorsements within ten (10) days of the execution of this Agreement evidencing all of the coverage's required above. Such certificates shall provide that the CITY is given at least thirty (30) days prior written notice of any cancellation, intention not to renew, or material change in such coverage. Consultant must provide Certificates of Insurance before commencing work in connection with the Agreement.

C. Additional insurance coverage may be required at the CITY'S discretion where the CITY determines, in its sole and sound discretion that the nature of the services to be performed is deemed to be hazardous in nature, or of such other character as to make such additional coverage warranted and/or prudent.

D. Failure on the part of the CONSULTANT to procure and maintain the required liability insurance and provide proof thereof to the CITY within thirty (30) days following the commencement of a new policy period, shall constitute a material breach of this Agreement upon which the CITY may immediately terminate this Agreement. The CITY reserves the right to request and promptly receive copies of any or all of the above policies and/or endorsements.

ARTICLE VII -- CANCELLATION OF AGREEMENT

Pursuant to A.R.S. Section 38-511, the provisions of which are incorporated herein by reference, all parties are hereby put on notice that this Agreement is subject to cancellation by CITY or its departments or agencies if any person significantly involved in initiating, negotiating, securing, drafting, or creating the Contract on behalf of CITY or its departments or agencies is, at any time while the Agreement or any extension of the Contract is in effect, an employee or agent of any other party to the Agreement in any capacity, or a Consultant to any other party of the Agreement with respect to the subject matter thereof.

ARTICLE VIII -- NON-DISCRIMINATION

The CONSULTANT shall comply with Title VII of the Civil Rights Act of 1964, as amended, the Age Discrimination in Employment Act of 1975, and Federal Executive Order No. 11246, State Executive Order No. 2009-09, and A.R.S. Section 41-1461 et. Seq., which mandates that all persons, regardless of race, color, religion, sex, age, national origin, or political affiliation, shall have access to employment opportunities. The CONSULTANT shall comply with Section 503 of the Rehabilitation Act of 1973, as amended, which prohibits discrimination in the employment or advancement in employment of qualified persons because of physical or mental handicap. The CONSULTANT shall comply with Title 6 of the Civil Rights Act of 1964, as amended, which prohibits the denial of benefits or participation in contract services on the basis of race, color, or national origin. The CONSULTANT shall comply with the requirements of Section 504 of the Rehabilitation Act of 1973, as amended, and with the Americans with Disabilities Act of 1990, which prohibits discrimination on the basis of handicap in delivering contract services.

ARTICLE IX-- NOTICE

Any notice given in connection with this Agreement shall be given in writing and shall be delivered either by hand to the party or by certified mail, return receipt requested, to the party at the party's address stated below. Any party may change its address stated herein by giving notice of the change in accordance with this paragraph.

CONSULTANT	City of Cottonwood
c/o Lance McIntosh	c/o Morgan Scott
C&S Engineers, Inc.	Development Services Manager
9200 East Pima Center Pkwy., Suite 240	1490 W. Mingus Ave
Scottsdale, Arizona 85258	Cottonwood, AZ 86326

ARTICLE X -- CHOICE OF LAW

Any dispute under this Agreement or related to this Agreement shall be decided in accordance with the laws of the State of Arizona.

ARTICLE XI -- SEVERABILITY

If any part of this Agreement shall be held unenforceable by a court of competent jurisdiction, the rest of the Agreement shall nevertheless remain in full force and effect.

ARTICLE XII-WAIVER

The failure of either party at any time to require performance by the other party of any provision of this Agreement shall in no way affect the party's subsequent rights and obligations under that or any other provision. Waiver by either party of the breach of any provisions hereof shall not be taken or held to be a waiver of any succeeding breach of such provision or as waiver of such provision itself.

ARTICLE XIII - CITY'S RIGHT TO PERFORM CONTRACTOR'S OBLIGATIONS AND TERMINATION BY THE CITY FOR CAUSE

If the Contractor refuses or fails, except in cases for which extension of time is provided, to supply sufficient properly skilled staff or proper materials, or disregards laws, ordinances, rules, regulations, or orders of any public authority jurisdiction, or otherwise substantially or materially violates or breaches any term or provision of this Agreement, and such nonperformance or violation continues without cure for fifteen (15) days after the Contractor receives from the City written notice of such nonperformance or violation, then the City may, without prejudice to any right or remedy otherwise available to the City, terminate this Agreement.

Upon termination of this Agreement by the City, the City will be entitled to furnish or have furnished the Services to be performed hereunder by the Contractor by whatever method the City may deem expedient. Also, in such case, the Contractor shall not be entitled to receive any further payment until completion of the Work; and the total compensation to the Contractor under this Agreement shall be the amount that is equitable under the circumstances. If the City and the Contractor are unable to agree on the amount to be paid under the foregoing sentence, the City will fix an amount, if any, that it deems appropriate in consideration of all of the circumstances surrounding such termination, and will make payment accordingly. The Contractor may dispute the City's assessment of the termination amount by any method of dispute resolution permitted under this Agreement.

Upon the appointment of a receiver for the Contractor, or if the Contractor makes a general assignment for the benefit of creditors, the City may terminate this Agreement, without prejudice to any right or remedy otherwise available to the City, upon giving three (3) working days' written notice to the Contractor. If an order for relief is entered under the bankruptcy code with respect to the Contractor, the City may terminate this Agreement by giving three (3) working days' written notice to the Contractor unless the Contractor or the trustee:

- **a.** Promptly cures all breaches.
- **b.** Provides adequate assurances of future performance.
- **c.** Compensates the City for actual pecuniary loss resulting from such breaches.
- **d.** Assumes the obligations of the Contractor within the statutory time limits.

TERMINATION BY THE CITY FOR CONVENIENCE

The City may terminate this Agreement, in whole or in part, at any time for the convenience of the City, without prejudice to any right or remedy otherwise available to the City. Upon receipt of notice of termination, the Contractor shall immediately discontinue all services affected as of the stated effective date, unless such notice directs otherwise. In the event of a termination for convenience by the City, the Contractor's sole and exclusive right and remedy shall be to be paid for all work performed and to receive equitable adjustment for all work performed through the date of termination minus City's claims. The Contractor shall not be entitled to be paid any amount as profit for unperformed services or any other consideration for the terminated portions of the work.

SUSPENSION BY THE CITY FOR CONVENIENCE

The City may order the Contractor in writing to suspend, delay or interrupt all or any part of the Work without cause for such period of time as the City may determine to be appropriate for its convenience.

Adjustments caused by suspension, delay or interruption shall be made for increases in the GMP, compensation for Design Phase Services, the Contractor's Fee and/or the date of Substantial Completion. No adjustment shall be made if the Contractor is or otherwise would have been responsible for or could have mitigated the suspension, delay or interruption of the Work, or if another provision of this Agreement is applied to render an equitable adjustment.

ARTICLE XIV- LEGAL ARIZONA WORKERS ACT COMPLIANCE

CONSULTANT warrants that it does and will continue to comply with all state and federal immigration laws and regulations, including without limitation Arizona Revised Statutes (ARS) Section 41-4401 (Government procurement; E-verify requirement; definitions) and ARS Section 23-214, and that it shall verify, through the U.S. Department of Homeland Security's E-Verify program, the employment eligibility of each employee who provides services or labor in Arizona for wages or other remuneration, and that it shall require its sub Consultants and sub-sub Consultants to provide the same warranties to the Consultant. The Consultant acknowledges that a breach of this warranty by Consultant or by any sub Consultant or sub-sub Consultant under this Contract shall be deemed a material breach of this Contract, and is grounds for penalties, including termination of this Contract, by the City. The City retains the legal right to inspect the papers of any Consultant, sub Consultant and sub-sub Consultant employee who performs work under this Contract, and to conduct random verification of the employment records of the Consultant and each sub Consultant and sub-sub Consultant who works on this Contract, to ensure that the Consultant and each sub Consultant and sub-sub Consultant is complying with the warranties set forth above.

ARTICLE XV- FEDERAL CONTRACT PROVISIONS

The Consultant shall comply will all Federal Contract Provisions as detailed, but not limited to, in Appendix B.

ARTICLE XVI – SCRUTINIZED BUSINESS OPERATIONS

Pursuant to Arizona Revised Statutes Sections 35-391.06 and 35-393.06, CONSULTANT hereby certifies that it does not have scrutinized business operations in Sudan or Iran. The submission of a false certification by CONSULTANT may result in action that includes termination of this Agreement.

C&S Engineers, Inc.
Consultant

Lance R. McIntosh
Name

5/3/13
Date of Signing

Department Manager
Title

CITY

City of Cottonwood

By: Diane Joens, Mayor

5-23-13
Date of Signing

Attest:

Marianne Jiménez, City Clerk

Approved as to form:

By: Steve Horton, City Attorney

Airport Projects - by Airport

Airport Name - County

FY	Project Component	Project Description	State Share	Local Share	Federal Share	Project Total
COTTONWOOD - YAVAPAI						
2013	APMS - Runway Pavement Preservation	Thin asphalt overlay/PFC. RW1432CT 10.	$351,310	$39,035	$0	$390,345
2013	Other:<Construct/Rehabilitate> Parking Lot [non revenue producing-non hub/MAP] - Other	Expand front visitor parking from 6 spaces to 40 spaces.	$5,250	$5,250	$199,500	$210,000
2013	Equipment:Install Weather Reporting Equipment {describe, e.g., AWOS } - Standards	Install AWOS.	$8,750	$8,750	$332,500	$350,000
2014	Other:Environmental Mitigation	Design/constr. AC wash rack.	$5,000	$5,000	$190,000	$200,000
2016	APMS - Apron Pavement Preservation	Crack seal and rubberized asphalt emulsion seal coat. A01CT 20.	$67,953	$7,550	$0	$75,503
2016	Planning:<Conduct/Update> <Airport Master Plan Study {ALP, EA, etc.}>	ALP update & environmental review for extension of Rwy 32.	$2,000	$2,000	$76,000	$80,000
2016	Land:Acquire <land/easement> for development/relocation	Purchase approx. 11.6 acres to allow for future airport development & equipment such as an AWOS and relocated segmented circle.	$16,875	$16,875	$641,250	$675,000
2016	APMS - Taxiway Pavement Preservation	Thin asphalt overlay/PFC. TWACT 10.	$203,105	$22,567	$0	$225,672
2017	Runways:<Extend/Widen/Strengthen> Runway [to meet standards] - Standards	Design and constr. Rwy 32 extension - approx. 300 ft x 75 ft.	$9,125	$9,125	$346,750	$365,000
2017	Land:Acquire <land/easement> for development/relocation	Purchase approx. 11.6 acres to allow for future airport development & equipment such as an AWOS and relocated segmented circle.	$16,875	$16,875	$641,250	$675,000
		Airport Total:	**$686,243**	**$133,027**	**$2,427,250**	**$3,246,520**
DOUGLAS MUNI - COCHISE						
2013	APMS - Taxiway Pavement Preservation	Thin asphalt overlay/PFC TWADM 10.	$263,330	$29,259	$0	$292,589
2014	Runway MIRL/HIRL, Install	Design/constr./rehab. Rwy lighting, MIRL (5,760 ft x 75 ft), apron lighting, beacon, segmented circle, & windcone.	$900,000	$100,000	$0	$1,000,000
2016	APMS - Apron Pavement Preservation	Thin asphalt overlay/PFC A02DM 10.	$411,905	$45,767	$0	$457,672
2016	APMS - Apron Pavement Preservation	Crack seal and rubberized asphalt emulsion seal coat A01DM 10.	$48,996	$5,444	$0	$54,440
2017	Land for Protection (Safety Areas), Acquire	Land Acq. of RPZ for Rwy 12 approx. 1.5 acres of APN 410-25-002C.	$540,000	$60,000	$0	$600,000
		Airport Total:	**$2,164,231**	**$240,470**	**$0**	**$2,404,701**
ELOY MUNI - PINAL						
2013	Apron:Rehabilitate Apron - Reconstruction	Rehab. of apron & hangar taxilanes (15,450 sy) Ph. 2.	$25,000	$25,000	$950,000	$1,000,000
2014	Ground Transportation:<Construct/Expand/Improve/Modify/Rehabilitate> Access Road - Other	Design recon. of Lear Drive including removal of extg. Lear Drive pavement & base & installation of new base & pavement (1,600 ft x 24 ft) Ph. 1.	$2,500	$2,500	$95,000	$100,000
2014	Taxiways:Construct Taxiway [includes relocation]	Design relocation of Twy A (17,000 sy) to meet FAA design standards. Project also includes new MITL, Ph. 2.	$6,250	$6,250	$237,500	$250,000

APPENDIX B: FEDERAL CONTRACT PROVISIONS

TABLE OF CONTENTS

- Civil Rights Act of 1964, Title VI Contractor Contractual Requirements - Title 49 CFR Part 21
- Airport and Airway Improvement Act of 1982, Section 520 Title 49 U.S.C. 47123
- Lobbying and Influencing Federal Employees Title 49 CFR Part 20
- Access to Records and Reports Title 49 CFR Part 18.36
- Disadvantaged Business Enterprise Title 49 CFR Part 26
- Breach of Contract Terms Title 49 CFR Part 18.36
- Rights to Inventions Title 49 CFR Part 18.36
- Trade Restriction Clause Title 49 CFR Part 30
- Termination of Contract Title 49 CFR Part 18.36
- Certification Regarding Debarment, Suspension, Ineligibility and Voluntary Exclusion Title 49 CFR Part 29

CIVIL RIGHTS ACT OF 1964, TITLE VI – CONTRACTOR CONTRACTUAL REQUIREMENTS

During the performance of this contract, the contractor, for itself, its assignees and successors in interest (hereinafter referred to as the "contractor") agrees as follows:

1.1 Compliance with Regulations. The contractor shall comply with the Regulations relative to nondiscrimination in federally assisted programs of the Department of Transportation (hereinafter, "DOT") Title 49, Code of Federal Regulations, Part 21, as they may be amended from time to time (hereinafter referred to as the Regulations), which are herein incorporated by reference and made a part of this contract.

1.2 Nondiscrimination. The contractor, with regard to the work performed by it during the contract, shall not discriminate on the grounds of race, color, or national origin in the selection and retention of subcontractors, including procurements of materials and leases of equipment. The contractor shall not participate either directly or indirectly in the discrimination prohibited by section 21.5 of the Regulations, including employment practices when the contract covers a program set forth in Appendix B of the Regulations.

1.3 Solicitations for Subcontracts, Including Procurements of Materials and Equipment. In all solicitations either by competitive bidding or negotiation made by the contractor for work to be performed under a subcontract, including procurements of materials or leases of equipment, each potential subcontractor or supplier shall be notified by the contractor of the contractor's obligations under this contract and the Regulations relative to nondiscrimination on the grounds of race, color, or national origin.

1.4 Information and Reports. The contractor shall provide all information and reports required by the Regulations or directives issued pursuant thereto and shall permit access to its books, records, accounts, other sources of information, and its facilities as may be determined by the Sponsor or the Federal Aviation Administration (FAA) to be pertinent to ascertain compliance with such Regulations, orders, and instructions. Where any information required of a contractor is in the exclusive possession of another who fails or refuses to furnish this information, the contractor shall so certify to the sponsor or the FAA, as appropriate, and shall set forth what efforts it has made to obtain the information.

1.5 Sanctions for Noncompliance. In the event of the contractor's noncompliance with the nondiscrimination provisions of this contract, the sponsor shall impose such contract sanctions as it or the FAA may determine to be appropriate, including, but not limited to:

a. Withholding of payments to the contractor under the contract until the contractor complies, and/or
b. Cancellation, termination, or suspension of the contract, in whole or in part.

1.6 Incorporation of Provisions. The contractor shall include the provisions of paragraphs 1 through 5 in every subcontract, including procurements of materials and leases of equipment, unless exempt by the Regulations or directives issued pursuant thereto. The contractor shall take such action with respect to any subcontract or procurement as the sponsor or the FAA may direct as a means of enforcing such provisions including sanctions for noncompliance. Provided, however, that in the event a contractor becomes involved in, or is threatened with, litigation with a subcontractor or supplier as a result of such direction, the contractor may request the Sponsor to enter into such litigation to protect the interests of the sponsor and, in addition, the contractor may request the United States to enter into such litigation to protect the interests of the United States.

AIRPORT AND AIRWAY IMPROVEMENT ACT OF 1982, SECTION 520 - GENERAL CIVIL RIGHTS PROVISIONS

The contractor assures that it will comply with pertinent statutes, Executive orders and such rules as are promulgated to assure that no person shall, on the grounds of race, creed, color, national origin, sex, age, or handicap be excluded from participating in any activity conducted with or benefiting from Federal assistance. This provision obligates the tenant/concessionaire/lessee or its transferee for the period during which Federal assistance is extended to the airport a program, except where Federal assistance is to provide, or is in the form of personal property or real property or interest therein or structures or improvements thereon. In these cases the provision obligates the party or any transferee for the longer of the following periods: (a) the period during which the property is used by the airport sponsor or any transferee for a purpose for which Federal assistance is extended, or for another purpose involving the provision of similar services or benefits or (b) the period during which the airport sponsor or any transferee retains ownership or possession of the property. In the case of contractors, this provision binds the contractors from the bid solicitation period through the completion of the contract. This provision is in addition to that required of Title VI of the Civil Rights Act of 1964.

LOBBYING AND INFLUENCING FEDERAL EMPLOYEES

(1) No Federal appropriated funds shall be paid, by or on behalf of the contractor, to any person for influencing or attempting to influence an officer or employee of any agency, a Member of Congress, an officer or employee of Congress, or an employee of a Member of Congress in connection with the making of any Federal grant and the amendment or modification of any Federal grant.

(2) If any funds other than Federal appropriated funds have been paid or will be paid to any person for influencing or attempting to influence an officer or employee of any agency, a Member of Congress, an officer or employee of Congress, or an employee of a Member of Congress in connection with any Federal grant, the contractor shall complete and submit Standard Form-LLL, "Disclosure of Lobby Activities," in accordance with its instructions.

ACCESS TO RECORDS AND REPORTS

The Contractor shall maintain an acceptable cost accounting system. The Contractor agrees to provide the Sponsor, the Federal Aviation Administration and the Comptroller General of the United States or any of their duly authorized representatives access to any books, documents, papers, and records of the contractor which are directly pertinent to the specific contract for the purpose of making audit, examination, excerpts and transcriptions. The Contractor agrees to maintain all books, records and reports required under this contract for a period of not less than three years after final payment is made and all pending matters are closed.

DISADVANTAGED BUSINESS ENTERPRISES

Contract Assurance (§26.13) - The contractor or subcontractor shall not discriminate on the basis of race, color, national origin, or sex in the performance of this contract. The contractor shall carry out applicable requirements of 49 CFR Part 26 in the award and administration of DOT assisted contracts. Failure by the contractor to carry out these requirements is a material breach of this contract, which may result in the termination of this contract or such other remedy, as the recipient deems appropriate.

Prompt Payment (§26.29) - The prime contractor agrees to pay each subcontractor under this prime contract for satisfactory performance of its contract no later than ***[specify number]*** days from the receipt of each payment the prime contractor receives from ***[Name of recipient].*** The prime contractor agrees further to return retainage payments to each subcontractor within [specify the same number as above] days after the subcontractor's work is satisfactorily completed. Any delay or postponement of payment

This certification concerns a matter within the jurisdiction of an agency of the United States of America and the making of a false, fictitious, or fraudulent certification may render the maker subject to prosecution under Title 18, United States Code, Section 1001.

TERMINATION OF CONTRACT

a. The Sponsor may, by written notice, terminate this contract in whole or in part at any time, either for the Sponsor's convenience or because of failure to fulfill the contract obligations. Upon receipt of such notice services shall be immediately discontinued (unless the notice directs otherwise) and all materials as may have been accumulated in performing this contract, whether completed or in progress, delivered to the Sponsor.

b. If the termination is for the convenience of the Sponsor, an equitable adjustment in the contract price shall be made, but no amount shall be allowed for anticipated profit on unperformed services.

c. If the termination is due to failure to fulfill the contractor's obligations, the Sponsor may take over the work and prosecute the same to completion by contract or otherwise. In such case, the contractor shall be liable to the Sponsor for any additional cost occasioned to the Sponsor thereby.

d. If, after notice of termination for failure to fulfill contract obligations, it is determined that the contractor had not so failed, the termination shall be deemed to have been effected for the convenience of the Sponsor. In such event, adjustment in the contract price shall be made as provided in paragraph 2 of this clause.

e.The rights and remedies of the sponsor provided in this clause are in addition to any other rights and remedies provided by law or under this contract.

CERTIFICATION REGARDING DEBAREMENT, SUSPENSION, INELIGIBILITY AND VOLUNTARY EXCLUSION

The bidder/offeror certifies, by submission of this proposal or acceptance of this contract, that neither it nor its principals is presently debarred, suspended, proposed for debarment, declared ineligible, or voluntarily excluded from participation in this transaction by any Federal department or agency. It further agrees by submitting this proposal that it will include this clause without modification in all lower tier transactions, solicitations, proposals, contracts, and subcontracts. Where the bidder/offeror/contractor or any lower tier participant is unable to certify to this statement, it shall attach an explanation to this solicitation/proposal.

AUTHORIZATION FOR SERVICES NO. 4

CONSTRUCTION MANAGEMENT SERVICES
OF COTTONWOOD MUNICIPAL AIRPORT

APRON RECONSTRUCTION PROJECT

GENERAL AIRPORT CONSULTING SERVICES CONTRACT
BETWEEN
CITY OF COTTONWOOD & C&S ENGINEERS, INC.

ARTICLE I AGREEMENT

In accordance with the General Airport Consulting Services Contract, dated the 23rd day of May, 2013, the provisions of which agreement is hereby incorporated herein as if it had been set forth in full, CONSULTANT will perform the Scope of Services detailed in Schedule A for performing construction management services associated with the Apron Reconstruction Project at the Cottonwood Municipal Airport.

ARTICLE II COMPENSATION AND PAYMENT

For the performance of the services identified in Schedule A, CONSULTANT shall be paid on a rate basis amount by the CITY in accordance with Schedule B for a not-to-exceed fee of $160,533.00. Partial payments shall be made to the CONSULTANT throughout the project based on approved monthly invoices detailing the portion of each work task that is complete.

The Consultant shall not proceed with the services of work until written authorization in the form of a Notice to Proceed is received from the CITY.

ARTICLE III TIME OF PERFORMANCE

The services of the CONSULTANT described in Schedule A are to commence on written notice to proceed and shall be completed in accordance with the Contractor's agreed upon construction schedule.

Binding Upon Successors: This Agreement shall be binding upon the undersigned parties, their successors, partners, assigns and legal representatives.

PASSED APPROVED AND ADOPTED by the City of Cottonwood this _____ day of_____, 20___.

_____
Rudy Rodriguez
Administrative Services General Manager

APPROVED AS TO FORM:

_____
City Attorney

C&S ENGINEERS, INC.
A PROFESSIONAL CORPORATION

BY: _____
Department Manager

SCHEDULE A

SCOPE OF WORK

Project Title: **Apron Reconstruction**
Airport Name: **Cottonwood Municipal Airport**
Services Provided: **Construction Admin & Observation Services**

Project Description:
The CONSULTANT shall provide required construction management services for the Apron Strengthening Project, Phase V (the "Project"). The Project will be performed and constructed by the SPONSOR with grant assistance from the Federal Aviation Administration (FAA) Airport Improvement Program (AIP) and the Arizona State Department of Transportation (ADOT).

C&S will provide bidding and contract award services prior to construction and construction observation, design support and quality assurance testing services during construction. Once construction is complete, C&S will produce record drawings and final construction report and assist the City with the grant closeout process.

Services to be provided by the CONSULTANT shall include civil and geotechnical engineering services, as applicable, required to accomplish the following items ("Basic Services"):

CONSTRUCTION CONTRACT ADMINISTRATION PHASE

The Construction Contract Administration Phase shall consist of observation of the construction to become generally familiar with the progress and quality of the Contractor's work to determine if the work is proceeding in general conformity with the Contract Documents. In addition, the CONSULTANT shall aid the SPONSOR by acting as its liaison and Project coordinator with ADOT and the FAA during the construction of the Project. Construction Contract Administration includes the following services:

1. Coordinate Notice to Proceed (NTP) for construction. Contact FAA for permission to issue NTP. Prepare a sample NTP letter for the SPONSOR to send to the contractor.

2. Provide consultation and advice to the SPONSOR during construction, including the holding of a pre-construction conference, weekly construction coordination meetings, and other meetings required during the course of construction. Prepare and distribute minutes of all meetings.

3. Review, approve, or take other appropriate action on all Contractor-required submittals, such as construction schedules and phasing programs, shop drawings, product data, catalog cuts, and samples.

4. Review alternative construction methods proposed by the Contractor and advise the SPONSOR of the impact of these methods on the schedule and quality of the Project.

5. Prepare supplemental drawings and change orders necessary to execute the work properly within the intended scope. Assist the SPONSOR in resolving contractor claims and disputes.

6. Provide interpretation of the Contract Document requirements and advise the Contractor of these on behalf of the SPONSOR when necessary.

7. Furnish the SPONSOR one reproducible set of the record drawings for the completed Project taken from the annotated record drawings prepared by the resident inspector based upon Contractor-provided information.

8. Prepare reimbursement request packages; coordinate their execution by the SPONSOR; and submit to the funding agencies.

9. Conduct pre-final and final inspections of the completed Project with the SPONSOR's airport personnel, the FAA, ADOT and the Contractor.

10. Issue certificates of construction completion to the SPONSOR, the FAA, and ADOT.

11. Perform an orderly closeout of the Project as required by the SPONSOR, the FAA, and ADOT.

CONSTRUCTION OBSERVATION PHASE

The construction observation phase shall consist of construction observation by a full-time inspector and supporting staff who will also:

1. Maintain a Project record in accordance with requirements of the FAA and ADOT for aviation capital projects.

2. Review documents and submissions by Contractor(s) pertaining to scheduling and advise the SPONSOR as to their acceptability.

3. Observe the Work to determine general conformity with the Contract Documents and to ascertain the need for correction or rejection of the Work. Neither the activities of the inspector and/or supporting staff nor the presence of any of them at a construction/Project site shall relieve Contractor nor make Consultant responsible for, Contractor's obligations, duties, and responsibilities, including, but not limited to, construction means, methods, sequences, techniques, or procedures necessary for performing, superintending, or coordinating the Work in accordance with the Contract Documents and any health or safety precautions or measures required by regulatory agencies.

4. Attend and conduct pre-construction, pre-paving and pre-installation conferences; weekly progress meetings; and final inspection of the completed Project.

5. Observe testing and inspection. Arrange for, conduct, or witness field, laboratory, or shop tests of construction materials as required by the plans and specifications for the Project; monitor the suitability of materials on the Project site or brought to the Project site to be used in construction; interpret the contract plans and specifications and check the construction activities for general compliance with the design intent; measure, compute, or check quantities of Work performed and quantities of materials in-place for partial and final payments to the Contractor.

6. Prepare and submit inspection reports of construction activity and problems encountered as required by the SPONSOR, ADOT, and the FAA.

7. Prepare, review, and approve monthly and final payments to Contractor(s).

RESPONSIBILITIES/DUTIES OF INSPECTION STAFF

In general, the on-site inspection staff is responsible for monitoring construction activity on a project and documenting their observations in a formal project record.

Inspection activity generally consists of the following records and duties:

1. Inspector's Daily Reports
2. Summary of Inspector's Daily Reports
3. Preparation of FAA Weekly Reports
4. Contractor Daily Reports
5. Preparation of Material Acceptance Reports
6. Preparation of Certification and Testing Log Book
7. Prepare statement of days charged on a weekly basis
8. Conduct Wage Rate Interviews with prime/subcontractors employees
9. Conduct Project meetings with Sponsor and Contractors
10. Field measure quantities on a daily basis
11. Collect and monitor weekly payrolls for Davis Bacon Act Compliance
12. Preparation of Periodic Payment Request for Contractor
13. Record deviations from the contract plans for preparation of record drawings
14. Preparation and review of Change Orders/Force Account Work

The Construction Observer will assist the SPONSOR and Contractor regarding construction activity as it relates to aircraft operations and coordination of Notice to Airmen (NOTAMS) as required.

END OF SCHEDULE

ARCHITECTURAL/ENGINEERING COST SUMMARY
SCHEDULE "B" - South Ramp
CONSTRUCTION MANAGEMENT PHASE

PROJECT NAME:	Apron Reconstruction Project	DATE:	22-Jun-16
PROJ DESCRIPTION:	Perform construction management services	A/E:	C & S ENGINEERS, INC.
		PROJECT NO:	K72.002.002
CLIENT:	City of Cottonwood	C&S CONTACT:	RICHARD GRAHAM
CLIENT MANAGER:	Morgan Scott		

I. ESTIMATE OF DIRECT SALARY COSTS:

	TITLE	BILLING RATE OF PAY ($/HR)	@	ESTIMATED HOURS		ESTIMATED COST
A.	MANAGING ENGINEER	$180.00	X	21.0	=	$3,780.00
B.	SENIOR PROJECT ENGINEER	$130.00	X	218	=	$28,340.00
C.	STAFF ENGINEER	$100.00	X	20	=	$2,000.00
D.	SENIOR DESIGNER	$90.00	X	60	=	$5,400.00
E.	ADMINISTRATIVE ASSISTANT	$60.00	X	10	=	$600.00
F.	SENIOR INSPECTOR	$115.00	X	609	=	$70,035.00

TOTAL ESTIMATED DIRECT SALARY COST: $111,115.00

II. ESTIMATE OF DIRECT EXPENSES:

A.	TRAVEL, BY AUTO:							
	28	TRIPS @	240	MILES/TRIP @	$0.445	=	$2,992.00
B.	TRAVEL, BY AIR:						
	0	TRIPS @	0	PERSONS @	$0.00	=	$0.00
C.	PER DIEM:						
	54	DAYS @	1	PERSONS @	$119.00	=	$6,426.00
D.	MISCELLANEOUS:					=	
					Subtotal =		$9,418.00

TOTAL ESTIMATE OF DIRECT EXPENSES: $9,418.00

III. SUBCONTRACTS:

		COMPANY NAME	*TYPE*	
A.	QUALITY ASSURANCE TESTING	ATL, Inc.	RATE BASIS	$40,000.00

TOTAL COST OF SBO'S: $40,000.00

IV. TOTALS:

A. MAXIMUM TOTAL COST FOR DESIGN SERVICES, AGREEMENT TOTAL & FAA ELIGIBLE: **$160,533.00**

C&S ENGINEERS, INC.
ARCHITECTURAL/ENGINEERING
WORK SUMMARY

PROJECT: Apron Reconstruction Project
SERVICES: Construction Observations, Design Supprt, QA Testing
CLIENT: City of Cottonwood
CLIENT MGR: Morgan Scott

Date: 6/22/16
Service Group Mgr: MICHAEL HOTALING
Department Manager: CORY HAZLEWOOD
Project Manager: RICHARD GRAHAM
Project Number: K72.002.002

TASK NO.	PHASE NO.	TASK	ADMIN ASST	GRANT ADM	SEN DES	STAFF ENG	SEN PROJ ENG	MANG ENG	SEN INSP	DIRECT COSTS	SERVICES BY OTHERS	TOTALS	TOTAL HOURS PER TASK
1.0	400	PRE-CONSTRUCTION CONFERENCE					10		10	$107.00		$2,557.00	20.0
2.0	401	CONSTRUCTION OBSERVATION							579	$7,815.00		$74,400.00	579.0
3.0	402	DESIGN SUPPORT					148	21		$1,496.00		$24,516.00	169.0
4.0	403	AS-BUILT/RECORD DRAWINGS			60		20		10			$9,150.00	90.0
5.0	404	PROJECT CLOSURE	10	10		20	40		10			$9,910.00	90.0
6.0	791	SBO - QUALITY ASSURANCE TESTING									$40,000.00	$40,000.00	
			10	10	60	20	218	21	609	$9,418.00	$40,000.00	$160,533.00	948

FEE SCHEDULE

PROJECT NAME:	Apron Reconstruction Project		
SERVICES:	Construction Observations, Design Supprt, QA Testing	SERVICE GROUP MGR:	MICHAEL HOTALING
PROJ LOCATION:	Cottonwood Municipal Airport	PROJECT MANAGER:	RICHARD GRAHAM
PROJ DESCRIPTION:	Perform construction management services	DEPT. MANAGER:	CORY HAZLEWOOD
CLIENT:	City of Cottonwood	DIRECT LABOR RATES:	2015
CLIENT ADDRESS:	1490 W. Mingus Ave. Cottonwood, AZ 86326	PROJECT NUMBER:	K72.002.002
CLIENT MANAGER:	Morgan Scott	DATE:	June 22, 2016

BILLING RATES **2013**

LABOR CATEGORY	BILLING RATE	OVERTIME
SERVICE GROUP MANAGER	$250.00	$0.00
DEPARTMENT MANAGER	$224.00	$0.00
MANAGING ENGINEER	$180.00	$0.00
CHIEF/PRINCIPAL ENGINEER	$180.00	$0.00
SENIOR PROJECT ENGINEER	$130.00	$0.00
PROJECT ENGINEER	$137.00	$0.00
STAFF ENGINEER	$100.00	$0.00
SENIOR DESIGNER	$90.00	$0.00
DESIGNER	$80.00	$95.00
CADD OPERATOR	$65.00	$80.00
ADMINISTRATIVE ASSISTANT	$60.00	$0.00
GRANTS ADMINISTRATOR	$96.00	$0.00
MANAGER AIRPORT PLANNING	$0.00	$0.00
SENIOR PLANNER	$0.00	$0.00
PLANNER	$0.00	$0.00
STAFF PLANNER	$0.00	$0.00
ENVIRONMENTAL SCIENTIST	$0.00	$0.00
SENIOR CONSTRUCTION SUPERVISOR	$0.00	$0.00
CONSTRUCTION SUPERVISOR	$187.00	$0.00
RESIDENT ENGINEER	$0.00	$0.00
SENIOR INSPECTOR	$115.00	$115.00

GENERAL FACTORS

MULTIPLIER = 1

ALLOWABLE PER DIEM RATES (ADOT) 2015

CITY	LODGING	MEALS	TOTAL MAX RATE
FLAG/GC (OCT)	$81	$39	$120
FLAG/GC (NOV-FEB)	$65	$39	$104
FLAG/GC (MAR-SEP)	$81	$39	$120
KAYENTA	$71	$49	$120
PHOENIX (OCT-DEC)	$103	$54	$157
PHOENIX (JAN-MAR)	$141	$54	$195
PHOENIX (APR-MAY)	$109	$54	$163
PHOENIX (JUN-AUG)	$74	$54	$128
PHOENIX (SEPT)	$103	$54	$157
SEDONA	$107	$59	$166
SEDONA	$118	$59	$177
SEDONA	$107	$59	$166
SIERRA VISTA	$66	$34	$100
TUCSON	$83	$44	$127
TUCSON	$119	$44	$163
TUCSON	$83	$44	$127
YUMA	$71	$34	$105
NOT LISTED DEFAULT RATE	$83	$36	$119

OUT OF POCKET EXPENSES

TRAVEL, BY AUTO (PER MILE):	$0.445	/MILE
PER DIEM:	$119.00	/DAY

SERVICES BY OTHERS

A. QUALITY ASSURANCE TESTING $40,000.00 RATE BASIS

APPROVED BY: _____ _____

(GROUP MANAGER AUTHORIZATION) (DATE)

SCHEDULE C

FAA STANDARD CONTRACT PROVISIONS

Provision	Dollar Threshold	Professional Services	Construction	Equipment	Property (Land)	Non-AIP Contracts	Check if included
a. Access to Records and Reports	$ 0	REQD	REQD	REQD	REQD	n/a	X
b. Buy American Preferences	$ 0	Limited	REQD	REQD	Limited	n/a	
(1) Buy American Statement	$ 0	Limited	REQD	REQD	Limited	n/a	
(2) Buy American – Total Facility	$ 0	Limited	REQD	REQD	Limited	n/a	
(3) Buy American – Manufactured Product	$ 0	Limited	REQD	REQD	Limited	n/a	
c. Civil Rights – General	$ 0	REQD	REQD	REQD	REQD	REQD	X
d. Civil Rights - Title VI Assurances	$ 0	REQD	REQD	REQD	REQD	REQD	X
(1) Notice - Solicitation	$ 0	REQD	REQD	REQD	REQD	REQD	X
(2) Clause - Contracts	$ 0	REQD	REQD	REQD	REQD	REQD	X
(3) Clause – Transfer of U.S. Property	$ 0	n/a	n/a	n/a	REQD	REQD	
(4) Clause – Transfer of Real Property	$ 0	n/a	n/a	n/a	REQD	REQD	
(5) Clause - Construct/Use/Access to Real Property	$ 0	n/a	n/a	n/a	REQD	REQD	
(6) List – Pertinent Authorities	$0	REQD	REQD	REQD	REQD	REQD	X
e. Disadvantaged Business Enterprise	$ 0	REQD	REQD	REQD	REQD	n/a	X
f. Energy Conservation Requirements	$ 0	REQD	REQD	REQD	REQD	n/a	X
g. Federal Fair Labor Standards Act	$ 0	REQD	REQD	REQD	REQD	REQD	X
h. Occupational Safety and Health Act	$ 0	REQD	REQD	REQD	REQD	REQD	X
i. Rights to Inventions	$ 0	Limited	Limited	Limited	n/a	n/a	
j. Trade Restriction Certification	$ 0	REQD	REQD	REQD	REQD	n/a	X
k. Veteran's Preference	$ 0	REQD	REQD	REQD	REQD	n/a	X
l. Seismic Safety	$ 0	Limited	Limited	n/a	n/a	n/a	
m. Copeland Anti-Kickback	$ 2,000	Limited	REQD	Limited	Limited	n/a	
n. Davis Bacon Requirements	$ 2,000	Limited	REQD	Limited	Limited	n/a	
o. Distracted Driving	$3,000	REQD	REQD	REQD	REQD	n/a	X
p. Affirmative Action Requirement	$10,000	Limited	REQD	Limited	Limited	n/a	
q. Equal Employment Opportunity	$10,000	Limited	REQD	Limited	Limited	n/a	
(1) EEO Contract Clause	$10,000	Limited	REQD	Limited	Limited	n/a	
(2) EEO Specification	$10,000	Limited	REQD	Limited	Limited	n/a	
r. Prohibition of Segregated Facilities	$10,000	Limited	REQD	Limited	Limited	n/a	
s. Recovered Materials	$10,000	Limited	REQD	REQD	Limited	n/a	
t. Termination of Contract	$10,000	REQD	REQD	REQD	REQD	n/a	X
u. Debarment and Suspension	$25,000	REQD	REQD	REQD	Limited	n/a	X
v. Contract Work Hours and Safety Standards	$100,000	Limited	REQD	Limited	Limited	n/a	
w. Lobbying Federal Employees	$ 100,000	REQD	REQD	REQD	REQD	n/a	X
x. Breach of Contract	$150,000	REQD	REQD	REQD	REQD	n/a	X
y. Clean Air/Water Pollution Control	$150,000	REQD	REQD	REQD	REQD	n/a	X

A1. ACCESS TO RECORDS AND REPORTS

The Contractor must maintain an acceptable cost accounting system. The Contractor agrees to provide the sponsor, the Federal Aviation Administration, and the Comptroller General of the United States or any of their duly authorized representatives, access to any books, documents, papers, and records of the contractor which are directly pertinent to the specific contract for the purpose of making audit, examination, excerpts and transcriptions. The Contractor agrees to maintain all books, records and reports required under this contract for a period of not less than three years after final payment is made and all pending matters are closed.

A3. BREACH OF CONTRACT TERMS

Any violation or breach of terms of this contract on the part of the contractor or its subcontractors may result in the suspension or termination of this contract or such other action that may be necessary to enforce the rights of the parties of this agreement.

Owner will provide Consultant written notice that describes the nature of the breach and corrective actions the Consultant must undertake in order to avoid termination of the contract. Owner reserves the right to withhold payments to Contractor until such time the Contractor corrects the breach or the Owner elects to terminate the contract. The Owner's notice will identify a specific date by which the Consultant must correct the breach. Owner may proceed with termination of the contract if the Consultant fails to correct the breach by deadline indicated in the Owner's notice.

The duties and obligations imposed by the Contract Documents and the rights and remedies available thereunder are in addition to, and not a limitation of, any duties, obligations, rights and remedies otherwise imposed or available by law.

A5. GENERAL CIVIL RIGHTS PROVISIONS

The contractor agrees to comply with pertinent statutes, Executive Orders and such rules as are promulgated to ensure that no person shall, on the grounds of race, creed, color, national origin, sex, age, or disability be excluded from participating in any activity conducted with or benefiting from Federal assistance.

This provision binds the contractor and subtier contractors from the bid solicitation period through the completion of the contract. This provision is in addition to that required of Title VI of the Civil Rights Act of 1964.

CIVIL RIGHTS – TITLE VI ASSURANCE

A6.1. Title VI Solicitation Notice:

The **City of Cottonwood**, in accordance with the provisions of Title VI of the Civil Rights Act of 1964 (78 Stat. 252, 42 U.S.C. §§ 2000d to 2000d-4) and the Regulations, hereby notifies all bidders that it will affirmatively ensure that any contract entered into pursuant to this advertisement, disadvantaged business enterprises will be afforded full and fair opportunity to submit bids in response to this invitation and will not be discriminated against on the grounds of race, color, or national origin in consideration for an award.

A6.2. Compliance with Nondiscrimination Requirements

During the performance of this contract, the contractor, for itself, its assignees, and successors in interest (hereinafter referred to as the "contractor") agrees as follows:

1. **Compliance with Regulations:** The contractor (hereinafter includes consultants) will comply with the Title VI List of Pertinent Nondiscrimination Acts And Authorities, as they may be amended from time to time, which are herein incorporated by reference and made a part of this contract.

2. **Non-discrimination:** The contractor, with regard to the work performed by it during the contract, will not discriminate on the grounds of race, color, or national origin in the selection and retention of subcontractors, including procurements of materials and leases of equipment. The contractor will not participate directly or indirectly in the discrimination prohibited by the Nondiscrimination Acts and Authorities, including employment practices when the contract covers any activity, project, or program set forth in Appendix B of 49 CFR part 21.

3. **Solicitations for Subcontracts, Including Procurements of Materials and Equipment:** In all solicitations, either by competitive bidding, or negotiation made by the contractor for work to be performed under a subcontract, including procurements of materials, or leases of equipment, each potential subcontractor or supplier will be notified by the contractor of the contractor's obligations under this contract and the Nondiscrimination Acts And Authorities on the grounds of race, color, or national origin.

4. **Information and Reports:** The contractor will provide all information and reports required by the Acts, the Regulations, and directives issued pursuant thereto and will permit access to its books, records, accounts, other sources of information, and its facilities as may be determined by the sponsor or the Federal Aviation Administration to be pertinent to ascertain compliance with such Nondiscrimination Acts And Authorities and instructions. Where any information required of a contractor is in the exclusive possession of another who fails or refuses to furnish the information, the contractor will so certify to the sponsor or the Federal Aviation Administration, as appropriate, and will set forth what efforts it has made to obtain the information.

5. **Sanctions for Noncompliance:** In the event of a contractor's noncompliance with the Non-discrimination provisions of this contract, the sponsor will impose such contract sanctions as it or the Federal Aviation Administration may determine to be appropriate, including, but not limited to:
    a. Withholding payments to the contractor under the contract until the contractor complies; and/or
    b. Cancelling, terminating, or suspending a contract, in whole or in part.

6. **Incorporation of Provisions:** The contractor will include the provisions of paragraphs one through six in every subcontract, including procurements of materials and leases of equipment, unless exempt by the Acts, the Regulations and directives issued pursuant thereto. The contractor will take action with respect to any subcontract or procurement as the sponsor or the Federal Aviation Administration may direct as a means of enforcing such provisions including sanctions for noncompliance. Provided, that if the contractor

becomes involved in, or is threatened with litigation by a subcontractor, or supplier because of such direction, the contractor may request the sponsor to enter into any litigation to protect the interests of the sponsor. In addition, the contractor may request the United States to enter into the litigation to protect the interests of the United States.

A6.6. Title VI List of Pertinent Nondiscrimination Acts and Authorities

During the performance of this contract, the contractor, for itself, its assignees, and successors in interest (hereinafter referred to as the "contractor") agrees to comply with the following non-discrimination statutes and authorities; including but not limited to:

- Title VI of the Civil Rights Act of 1964 (42 U.S.C. § 2000d *et seq*., 78 stat. 252), (prohibits discrimination on the basis of race, color, national origin);
- 49 CFR part 21 (Non-discrimination In Federally-Assisted Programs of The Department of Transportation—Effectuation of Title VI of The Civil Rights Act of 1964);
- The Uniform Relocation Assistance and Real Property Acquisition Policies Act of 1970, (42 U.S.C. § 4601), (prohibits unfair treatment of persons displaced or whose property has been acquired because of Federal or Federal-aid programs and projects);
- Section 504 of the Rehabilitation Act of 1973, (29 U.S.C. § 794 *et seq*.), as amended, (prohibits discrimination on the basis of disability); and 49 CFR part 27;
- The Age Discrimination Act of 1975, as amended, (42 U.S.C. § 6101 *et seq*.), (prohibits discrimination on the basis of age);
- Airport and Airway Improvement Act of 1982, (49 USC § 471, Section 47123), as amended, (prohibits discrimination based on race, creed, color, national origin, or sex);
- The Civil Rights Restoration Act of 1987, (PL 100-209), (Broadened the scope, coverage and applicability of Title VI of the Civil Rights Act of 1964, The Age Discrimination Act of 1975 and Section 504 of the Rehabilitation Act of 1973, by expanding the definition of the terms "programs or activities" to include all of the programs or activities of the Federal-aid recipients, sub-recipients and contractors, whether such programs or activities are Federally funded or not);
- Titles II and III of the Americans with Disabilities Act of 1990, which prohibit discrimination on the basis of disability in the operation of public entities, public and private transportation systems, places of public accommodation, and certain testing entities (42 U.S.C. §§ 12131 – 12189) as implemented by Department of Transportation regulations at 49 CFR parts 37 and 38;
- The Federal Aviation Administration's Non-discrimination statute (49 U.S.C. § 47123) (prohibits discrimination on the basis of race, color, national origin, and sex);
- Executive Order 12898, Federal Actions to Address Environmental Justice in Minority Populations and Low-Income Populations, which ensures non-discrimination against minority populations by discouraging programs, policies, and activities with disproportionately high and adverse human health or environmental effects on minority and low-income populations;
- Executive Order 13166, Improving Access to Services for Persons with Limited English Proficiency, and resulting agency guidance, national origin discrimination includes discrimination because of limited English proficiency (LEP). To ensure compliance with Title VI, you must take reasonable steps to ensure that LEP persons have meaningful access to your programs (70 Fed. Reg. at 74087 to 74100);
- Title IX of the Education Amendments of 1972, as amended, which prohibits you from discriminating because of sex in education programs or activities (20 U.S.C. 1681 et seq).

A7. CLEAN AIR AND WATER POLLUTION CONTROL

Contractor agrees to comply with all applicable standards, orders, and regulations issued pursuant to the Clean Air Act (42 U.S.C. § 740-7671q) and the Federal Water Pollution Control Act as amended (33 U.S.C. § 1251-1387). The Contractor agrees to report any violation to the Owner immediately upon discovery. The Owner assumes responsibility for notifying the Environmental Protection Agency (EPA) and the Federal Aviation Administration.

Contractor must include this requirement in all subcontracts that exceeds $150,000.

A11. DEBARMENT AND SUSPENSION

CERTIFICATION OF OFFERER/BIDDER REGARDING DEBARMENT

By submitting a bid/proposal under this solicitation, the bidder or offeror certifies that neither it nor its principals are presently debarred or suspended by any Federal department or agency from participation in this transaction.

CERTIFICATION OF LOWER TIER CONTRACTORS REGARDING DEBARMENT

The successful bidder, by administering each lower tier subcontract that exceeds $25,000 as a "covered transaction", must verify each lower tier participant of a "covered transaction" under the project is not presently debarred or otherwise disqualified from participation in this federally assisted project. The successful bidder will accomplish this by:

1. Checking the System for Award Management at website: http://www.sam.gov
2. Collecting a certification statement similar to the Certificate Regarding Debarment and Suspension (Bidder or Offeror), above.
3. Inserting a clause or condition in the covered transaction with the lower tier contract

If the FAA later determines that a lower tier participant failed to disclose to a higher tier participant that it was excluded or disqualified at the time it entered the covered transaction, the FAA may pursue any available remedies, including suspension and debarment of the non-compliant participant.

A12. DISADVANTAGED BUSINESS ENTERPRISES

Contract Assurance (§ 26.13) - The contractor or subcontractor shall not discriminate on the basis of race, color, national origin, or sex in the performance of this contract. The contractor shall carry out applicable requirements of 49 CFR Part 26 in the award and administration of DOT assisted contracts. Failure by the contractor to carry out these requirements is a material breach of this contract, which may result in the termination of this contract or such other remedy, as the recipient deems appropriate.

Prompt Payment (§26.29) - The prime contractor agrees to pay each subcontractor under this prime contract for satisfactory performance of its contract no later than 30 days from the receipt of each payment the prime contractor receives from City of Cottonwood. The prime contractor agrees further to return retainage payments to each subcontractor within 30 days after the subcontractor's work is satisfactorily completed. Any delay or postponement of payment from the above referenced time frame may occur only for good cause following written approval of the City of Cottonwood. This clause applies to both DBE and non-DBE subcontractors.

The requirements of 49 CFR part 26 apply to this contract. It is the policy of the City of Cottonwood to practice nondiscrimination based on race, color, sex or national origin in the award or performance of this contract. The Owner encourages participation by all firms qualifying under this solicitation regardless of business size or ownership.

A13. TEXTING WHEN DRIVING

In accordance with Executive Order 13513, "Federal Leadership on Reducing Text Messaging While Driving" (10/1/2009) and DOT Order 3902.10 "Text Messaging While Driving" (12/30/2009), the FAA encourages recipients of Federal grant funds to adopt and enforce safety policies that decrease crashes by distracted drivers, including policies to ban text messaging while driving when performing work related to a grant or sub-grant.

In support of this initiative, the Owner encourages the Contractor to promote policies and initiatives for its employees and other work personnel that decrease crashes by distracted drivers, including policies that ban text messaging while driving motor vehicles while performing work activities associated with the project. The Contractor must include the substance of this clause in all sub-tier contracts exceeding $3,500 and involve driving a motor vehicle in performance of work activities associated with the project.

A14. ENERGY CONSERVATION REQUIREMENTS

Contractor and Subcontractor agree to comply with mandatory standards and policies relating to energy efficiency as contained in the state energy conservation plan issued in compliance with the Energy Policy and Conservation Act (42 U.S.C. 6201*et seq*).

A16. FEDERAL FAIR LABOR STANDARDS ACT (FEDERAL MINIMUM WAGE)

All contracts and subcontracts that result from this solicitation incorporate by reference the provisions of 29 CFR part 201, the Federal Fair Labor Standards Act (FLSA), with the same force and effect as if given in full text. The FLSA sets minimum wage, overtime pay, recordkeeping, and child labor standards for full and part time workers.

The consultant has full responsibility to monitor compliance to the referenced statute or regulation. The consultant must address any claims or disputes that arise from this requirement directly with the U.S. Department of Labor – Wage and Hour Division.

A17. CERTIFICATION REGARDING LOBBYING

The bidder or offeror certifies by signing and submitting this bid or proposal, to the best of his or her knowledge and belief, that:

(1) No Federal appropriated funds have been paid or will be paid, by or on behalf of the Bidder or Offeror, to any person for influencing or attempting to influence an officer or employee of an agency, a Member of Congress, an officer or employee of Congress, or an employee of a Member of Congress in connection with the awarding of any Federal contract, the making of any Federal grant, the making of any Federal loan, the entering into of any cooperative agreement, and the extension, continuation, renewal, amendment, or modification of any Federal contract, grant, loan, or cooperative agreement.

(2) If any funds other than Federal appropriated funds have been paid or will be paid to any person for influencing or attempting to influence an officer or employee of any agency,

a Member of Congress, an officer or employee of Congress, or an employee of a Member of Congress in connection with this Federal contract, grant, loan, or cooperative agreement, the undersigned shall complete and submit Standard Form-LLL, "Disclosure Form to Report Lobbying," in accordance with its instructions.

(3) The undersigned shall require that the language of this certification be included in the award documents for all sub-awards at all tiers (including subcontracts, sub-grants, and contracts under grants, loans, and cooperative agreements) and that all sub-recipients shall certify and disclose accordingly.

This certification is a material representation of fact upon which reliance was placed when this transaction was made or entered into. Submission of this certification is a prerequisite for making or entering into this transaction imposed by section 1352, title 31, U.S. Code. Any person who fails to file the required certification shall be subject to a civil penalty of not less than $10,000 and not more than $100,000 for each such failure.

A19. OCCUPATIONAL SAFETY AND HEALTH ACT OF 1970

All contracts and subcontracts that result from this solicitation incorporate by reference the requirements of 29 CFR Part 1910 with the same force and effect as if given in full text. Contractor must provide a work environment that is free from recognized hazards that may cause death or serious physical harm to the employee. The Contractor retains full responsibility to monitor its compliance and their subcontractor's compliance with the applicable requirements of the Occupational Safety and Health Act of 1970 (20 CFR Part 1910). Contractor must address any claims or disputes that pertain to a referenced requirement directly with the U.S. Department of Labor – Occupational Safety and Health Administration.

A23. TERMINATION OF CONTRACT

Termination for Convenience (Professional Services)
The Owner may, by written notice to the Consultant, terminate this Agreement for its convenience and without cause or default on the part of Consultant. Upon receipt of the notice of termination, except as explicitly directed by the Owner, the Contractor must immediately discontinue all services affected.

Upon termination of the Agreement, the Consultant must deliver to the Owner all data, surveys, models, drawings, specifications, reports, maps, photographs, estimates, summaries, and other documents and materials prepared by the Engineer under this contract, whether complete or partially complete.

Owner agrees to make just and equitable compensation to the Consultant for satisfactory work completed up through the date the Consultant receives the termination notice. Compensation will not include anticipated profit on non-performed services.

Owner further agrees to hold Consultant harmless for errors or omissions in documents that are incomplete as a result of the termination action under this clause.

Termination for Default (Professional Services)

Either party may terminate this Agreement for cause if the other party fails to fulfill its obligations that are essential to the completion of the work per the terms and conditions of the Agreement. The party initiating the termination action must allow the breaching party an opportunity to dispute or cure the breach.

The terminating party must provide the breaching party [7] days advance written notice of its intent to terminate the Agreement. The notice must specify the nature and extent of the breach, the conditions necessary to cure the breach, and the effective date of the termination action. The rights and remedies in this clause are in addition to any other rights and remedies provided by law or under this agreement.

a) **Termination by Owner**: The Owner may terminate this Agreement in whole or in part, for the failure of the Consultant to:
   1. Perform the services within the time specified in this contract or by Owner approved extension;
   2. Make adequate progress so as to endanger satisfactory performance of the Project;
   3. Fulfill the obligations of the Agreement that are essential to the completion of the Project.

   Upon receipt of the notice of termination, the Consultant must immediately discontinue all services affected unless the notice directs otherwise. Upon termination of the Agreement, the Consultant must deliver to the Owner all data, surveys, models, drawings, specifications, reports, maps, photographs, estimates, summaries, and other documents and materials prepared by the Engineer under this contract, whether complete or partially complete.

   Owner agrees to make just and equitable compensation to the Consultant for satisfactory work completed up through the date the Consultant receives the termination notice. Compensation will not include anticipated profit on non-performed services.

   Owner further agrees to hold Consultant harmless for errors or omissions in documents that are incomplete as a result of the termination action under this clause.

   If, after finalization of the termination action, the Owner determines the Consultant was not in default of the Agreement, the rights and obligations of the parties shall be the same as if the Owner issued the termination for the convenience of the Owner.

b) **Termination by Consultant**: The Consultant may terminate this Agreement in whole or in part, if the Owner:
   1. Defaults on its obligations under this Agreement;
   2. Fails to make payment to the Consultant in accordance with the terms of this Agreement;
   3. Suspends the Project for more than [180] days due to reasons beyond the control of the Consultant.

   Upon receipt of a notice of termination from the Consultant, Owner agrees to cooperate with Consultant for the purpose of terminating the agreement or portion thereof, by mutual consent. If Owner and Consultant cannot reach mutual agreement on the termination settlement, the Consultant may, without prejudice to any rights and remedies it may have, proceed with terminating all or parts of this Agreement based upon the Owner's breach of the contract.

In the event of termination due to Owner breach, the Engineer is entitled to invoice Owner and to receive full payment for all services performed or furnished in accordance with this Agreement and all justified reimbursable expenses incurred by the Consultant through the effective date of

termination action. Owner agrees to hold Consultant harmless for errors or omissions in documents that are incomplete as a result of the termination action under this clause.

A24. TRADE RESTRICTION CERTIFICATION

By submission of an offer, the Offeror certifies that with respect to this solicitation and any resultant contract, the Offeror –

a. is not owned or controlled by one or more citizens of a foreign country included in the list of countries that discriminate against U.S. firms as published by the Office of the United States Trade Representative (U.S.T.R.);
b. has not knowingly entered into any contract or subcontract for this project with a person that is a citizen or national of a foreign country included on the list of countries that discriminate against U.S. firms as published by the U.S.T.R; and
c. has not entered into any subcontract for any product to be used on the Federal on the project that is produced in a foreign country included on the list of countries that discriminate against U.S. firms published by the U.S.T.R.

This certification concerns a matter within the jurisdiction of an agency of the United States of America and the making of a false, fictitious, or fraudulent certification may render the maker subject to prosecution under Title 18, United States Code, Section 1001.

The Offeror/Contractor must provide immediate written notice to the Owner if the Offeror/Contractor learns that its certification or that of a subcontractor was erroneous when submitted or has become erroneous by reason of changed circumstances. The Contractor must require subcontractors provide immediate written notice to the Contractor if at any time it learns that its certification was erroneous by reason of changed circumstances.

Unless the restrictions of this clause are waived by the Secretary of Transportation in accordance with 49 CFR 30.17, no contract shall be awarded to an Offeror or subcontractor:

(1) who is owned or controlled by one or more citizens or nationals of a foreign country included on the list of countries that discriminate against U.S. firms published by the U.S.T.R. or
(2) whose subcontractors are owned or controlled by one or more citizens or nationals of a foreign country on such U.S.T.R. list or
(3) who incorporates in the public works project any product of a foreign country on such U.S.T.R. list;

Nothing contained in the foregoing shall be construed to require establishment of a system of records in order to render, in good faith, the certification required by this provision. The knowledge and information of a contractor is not required to exceed that which is normally possessed by a prudent person in the ordinary course of business dealings.

The Offeror agrees that, if awarded a contract resulting from this solicitation, it will incorporate this provision for certification without modification in in all lower tier subcontracts. The contractor may rely on the certification of a prospective subcontractor that it is not a firm from a foreign country included on the list of countries that discriminate against U.S. firms as published by U.S.T.R, unless the Offeror has knowledge that the certification is erroneous.

This certification is a material representation of fact upon which reliance was placed when making an award. If it is later determined that the Contractor or subcontractor knowingly rendered an

erroneous certification, the Federal Aviation Administration may direct through the Owner cancellation of the contract or subcontract for default at no cost to the Owner or the FAA.

A25. VETERAN'S PREFERENCE

In the employment of labor (excluding executive, administrative, and supervisory positions), the contractor and all sub-tier contractors must give preference to covered veterans as defined within Title 49 United States Code Section 47112. Covered veterans include Vietnam-era veterans, Persian Gulf veterans, Afghanistan-Iraq war veterans, disabled veterans, and small business concerns (as defined by 15 U.S.C. 632) owned and controlled by disabled veterans. This preference only applies when there are covered veterans readily available and qualified to perform the work to which the employment relates.

Morgan Scott

From: Scott Driver <SDriver@azdot.gov>
Sent: Tuesday, June 28, 2016 1:36 PM
To: Morgan Scott
Subject: FW: Cottonwood Apron Project - Bid Tab

Morgan,

ADOT approves.

Thanks,
Scott

Scott R. Driver, A.A.E., CCIM
Airport Grants Manager
ADOT MPD Aeronautics Group
1801 W. Jefferson St., MD 426M
Phoenix, Arizona 85007
(602) 712-8386
azdot.gov

-----Original Message-----
From: Donald Kriz
Sent: Tuesday, June 28, 2016 1:12 PM
To: Scott Driver
Subject: RE: Cottonwood Apron Project - Bid Tab

Scott:

I have no comments.

-----Original Message-----
From: Scott Driver
Sent: Friday, June 24, 2016 11:05 AM
To: Morgan Scott
Cc: Kirsten Lennon; Jeffrey Cook; Donald Kriz
Subject: RE: Cottonwood Apron Project - Bid Tab

Hi Morgan,

After you have a fully executed FAA grant, please email me a copy and send a letter on your letterhead requesting matching funds from ADOT. Board approval will take a couple of months and then we'll send the ADOT grant offer.

Don,

Please let me know if you have comments on the C&S contract for construction admin. It's in the Cottonwood project file "Apron Recon (Constr)"

Thank you,
Scott

Scott R. Driver, A.A.E., CCIM
Airport Grants Manager
ADOT MPD Aeronautics Group
1801 W. Jefferson St., MD 426M
Phoenix, Arizona 85007
(602) 712-8386
azdot.gov

-----Original Message-----
From: Morgan Scott [mailto:mscott@cottonwoodaz.gov]
Sent: Friday, June 24, 2016 10:40 AM
To: Scott Driver
Cc: Kirsten Lennon; Jeffrey Cook
Subject: FW: Cottonwood Apron Project - Bid Tab

Hello Scott,

Attached is CnS proposal to provide Construction Administration services for the upcoming Apron project as well as the FAA's preliminary concurrence. Is there anything you need us to do to apply for ADOT to match the Construction Administration costs?

Thank you

Morgan Scott
City of Cottonwood
Development Services Manager
928-634-8033 x 1
Direct: 928-340-2768
Fax: 928-634-7285
mscott@cottonwoodaz.gov
1490 W Mingus Ave
Cottonwood, AZ 86326

To learn more about Cottonwood, click here.
And: http://www.cox7.com/step-outside/verde-valley-wine-show
Also: https://www.youtube.com/watch?v=ErSEIBYvQ7I

-----Original Message-----
From: Richard Graham [mailto:rgraham@cscos.com]
Sent: Wednesday, June 22, 2016 12:01 PM
To: Morgan Scott <mscott@cottonwoodaz.gov>

Cc: Jeffrey Cook <jcook@cottonwoodaz.gov>
Subject: RE: Cottonwood Apron Project - Bid Tab

Morgan,
I apologize, but I just received the formal proposal from our geotech engineer that will be performing quality assurance testing on the apron project and it's quite a bit higher than I originally thought. I have attached a revised proposal for your review. Let me know if you have questions on anything. Thanks!

www.cscos.com

Richard Graham, P.E.
Senior Project Engineer
C&S Companies
rgraham@cscos.com
office: (602) 997-7536
direct: (602) 422-8626
cell: (623) 451-2432
9200 E. Pima Center Pkwy., Suite 240
Scottsdale, AZ 85258
CONFIDENTIALITY NOTICE: This e-mail, including any attachment(s) to it, is intended for the exclusive use of the addressee(s) and may contain proprietary, confidential, or privileged information. If you are not the intended recipient, you are hereby notified that any use, disclosure, copying, distribution, or taking of any action in reliance on this information is strictly prohibited. If you have received this e-mail in error, please notify the sender immediately by e-mail and delete the message.

-----Original Message-----
From: Morgan Scott [mailto:mscott@cottonwoodaz.gov]
Sent: Friday, June 10, 2016 9:13 AM
To: Richard Graham <rgraham@cscos.com>
Cc: Jeffrey Cook <jcook@cottonwoodaz.gov>
Subject: FW: Cottonwood Apron Project - Bid Tab

Rich,

Also, when you have time would you send us over a scope of work for the construction administration and we will review it and take to our council?

Thanks

Morgan Scott
City of Cottonwood
Development Services Manager
928-634-8033 x 1
Direct: 928-340-2768
Fax: 928-634-7285
mscott@cottonwoodaz.gov
1490 W Mingus Ave
Cottonwood, AZ 86326

To learn more about Cottonwood, click here.
And: http://www.cox7.com/step-outside/verde-valley-wine-show
Also: https://www.youtube.com/watch?v=ErSEIBYvQ7I

-----Original Message-----
From: Tim.Morrison@faa.gov [mailto:Tim.Morrison@faa.gov]
Sent: Wednesday, June 8, 2016 10:18 AM
To: Morgan Scott
Cc: rgraham@cscos.com; SDriver@azdot.gov
Subject: RE: Cottonwood Apron Project - Bid Tab

Thanks... It will be a few weeks until we can get a grant out... Here is our concurrence on the award...

This is not a commitment of federal funding or a guarantee of federal participation until a Grant is issued....

-----Original Message-----
From: Morgan Scott [mailto:mscott@cottonwoodaz.gov]
Sent: Wednesday, June 08, 2016 9:16 AM
To: Morrison, Tim (FAA)
Cc: Erhard, Kyler (FAA); rgraham@cscos.com; SDriver@azdot.gov
Subject: RE: Cottonwood Apron Project - Bid Tab

Hello Tim,

Attached is the letter requesting the FAA's concurrence on the award for the Apron project. It came in a little higher than we were hoping. Please let me know if you would like to discuss. I will mail you the original.

Thanks

Morgan Scott
City of Cottonwood
Development Services Manager
928-634-8033 x 1
Direct: 928-340-2768
Fax: 928-634-7285
mscott@cottonwoodaz.gov
1490 W Mingus Ave
Cottonwood, AZ 86326

To learn more about Cottonwood, click here.
And: http://www.cox7.com/step-outside/verde-valley-wine-show
Also: https://www.youtube.com/watch?v=ErSEIBYvQ7I

-----Original Message-----
From: Tim.Morrison@faa.gov [mailto:Tim.Morrison@faa.gov]
Sent: Wednesday, June 8, 2016 6:23 AM
To: Morgan Scott

Cc: Kyler.Erhard@faa.gov; rgraham@cscos.com; SDriver@azdot.gov
Subject: RE: Cottonwood Apron Project - Bid Tab

In your letter to me requesting concurrence on award for Base+Alt1, please include bid tabs and a summary with your request to award to XXX for $XXX...

You may request a grant for $ 927,000 (federal share)... If slightly more please let me know ASAP...

Thanks

-----Original Message-----
From: Morgan Scott [mailto:mscott@cottonwoodaz.gov]
Sent: Tuesday, June 07, 2016 1:26 PM
To: Morrison, Tim (FAA)
Cc: Erhard, Kyler (FAA); Richard Graham; Scott Driver
Subject: Cottonwood Apron Project - Bid Tab

Hello Tim,

I wanted to send you this email in case we needed to discuss any of the numbers of figures attached.

FFA Grant 815,000 + 9% match $88,350 = $888,350

Base Bid $573,000 NGU
Alt 1 $918,000 Capital Improvements

$918,000 less $888,350 = $30,000 to complete Alt 1

Morgan Scott
City of Cottonwood
Development Services Manager
928-634-8033 x 1
Direct: 928-340-2768
Fax: 928-634-7285
mscott@cottonwoodaz.gov
1490 W Mingus Ave
Cottonwood, AZ 86326

To learn more about Cottonwood, click here.
And: http://www.cox7.com/step-outside/verde-valley-wine-show
Also: https://www.youtube.com/watch?v=ErSEIBYvQ7I

-----Original Message-----
From: Tim.Morrison@faa.gov [mailto:Tim.Morrison@faa.gov]
Sent: Monday, June 6, 2016 7:59 AM
To: Morgan Scott
Cc: SDriver@azdot.gov; Jeffrey Cook; rgraham@cscos.com; Kyler.Erhard@faa.gov
Subject: RE: Apron Project - Bid Tab

I am in a meeting Tuesday at 11:00... I am available before 10 today or between 12 and 2 today or between 12 and 2 Tuesday...

Your maximum grant amount will be $ 815,000 so I think you are stuck with the Base Bid...

-----Original Message-----
From: Morgan Scott [mailto:mscott@cottonwoodaz.gov]
Sent: Friday, June 03, 2016 8:30 AM
To: Morrison, Tim (FAA); Erhard, Kyler (FAA)
Cc: Scott Driver; Jeffrey Cook; 'Richard Graham'
Subject: FW: Apron Project - Bid Tab

Hello Tim and Kyler,

Attached are the revised bid tabulations for the Cottonwood Airport Apron Reconstruction Project. As you can see from Rich's email below there is a different apparent low bidder depending on which phase we select. Do you have time next Tuesday at 11:00 for a phone call to discuss which direction we should go from here?

Morgan Scott
City of Cottonwood
Development Services Manager
928-634-8033 x 1
Direct: 928-340-2768
Fax: 928-634-7285
mscott@cottonwoodaz.gov
1490 W Mingus Ave
Cottonwood, AZ 86326

To learn more about Cottonwood, click here.
And: http://www.cox7.com/step-outside/verde-valley-wine-show
Also: https://www.youtube.com/watch?v=ErSEIBYvQ7I

-----Original Message-----
From: Richard Graham [mailto:rgraham@cscos.com]
Sent: Friday, June 3, 2016 8:26 AM
To: Morgan Scott
Cc: Jeffrey Cook
Subject: Apron Project - Bid Tab

Morgan,

Attached is the bid tab for the apron project. With the programmed budget from the FAA, we should have enough for the base bid, but we can try stretching them for Alternate 1 as well if you're interested. If we go with only the base bid, NGU Contracting would get our recommendation. If we go with the Base plus Alt. 1, Capital Improvements is the apparent low bidder, but we would need to do some more digging into their bid because they were the only ones that didn't have DBE participations and one of their required forms was incomplete. I know you said that money was tight for matching funds, so I will recommend whatever combination of alternates you prefer, just let me know what works best for the City. One I have that direction from you, I can prepare our recommendation letter. Thanks!

Richard Graham, P.E.

Senior Project Engineer

C&S Companies

(602) 997-7536 office

(623) 451-2432 mobile

www.cscos.com<https://mail1.cscos.com/owa/www.cscos.com>

No virus found in this message.
Checked by AVG - www.avg.com
Version: 2016.0.7598 / Virus Database: 4591/12337 - Release Date: 05/31/16

No virus found in this message.
Checked by AVG - www.avg.com
Version: 2016.0.7598 / Virus Database: 4591/12359 - Release Date: 06/04/16

No virus found in this message.
Checked by AVG - www.avg.com
Version: 2016.0.7598 / Virus Database: 4591/12359 - Release Date: 06/04/16

No virus found in this message.
Checked by AVG - www.avg.com
Version: 2016.0.7598 / Virus Database: 4591/12359 - Release Date: 06/04/16

No virus found in this message.
Checked by AVG - www.avg.com
Version: 2016.0.7598 / Virus Database: 4591/12359 - Release Date: 06/04/16

No virus found in this message.
Checked by AVG - www.avg.com
Version: 2016.0.7598 / Virus Database: 4604/12437 - Release Date: 06/17/16

_____

Confidentiality and Nondisclosure Notice: This email transmission and any attachments are intended for use by the person(s)/entity(ies) named above and may contain confidential/privileged information. Any unauthorized use, disclosure or distribution is strictly prohibited. If you are not the intended recipient, please contact the sender by email, and delete or destroy all copies plus attachments.
.

No virus found in this message.
Checked by AVG - www.avg.com

City of Cottonwood, Arizona
City Council Agenda Communication

Print

Meeting Date:	September 6, 2016
Subject:	Assignment of Lot 131 Site Lease for the Cottonwood Airport
Department:	Development Services
From:	Morgan Scott, Development Services Manager

REQUESTED ACTION

Consider approving the proposed assignment of the lease for Lot 131 of the Cottonwood Airpark Subdivision at the Cottonwood Airport.

SUGGESTED MOTION

If the Council desires to approve this item the suggested motion is:

"I move to approve the proposed assignment of the lease for Lot 131 of the Cottonwood Airpark Subdivision to B and B Revocable Trust."

BACKGROUND

The current lease for Cottonwood Airpark Lot 131 is held by Clyde and Lois Henderson, who have expressed a desire to assign their lease to B and B Revocable Trust, currently owned by Brent Diehl. This is a lot on the east side of the airport along Airpark Road and is a part of the original 1983 lease. This assignment will bring the lease into compliance with the FAA Grant Assurances by restricting the use to aviation only. The property is vacant and the assignee does not currently have any plans to develop the property.

JUSTIFICATION/BENEFITS/ISSUES

- The assignment of the lease will not cost the City and the lease will remain the same.

- The new lease has been brought into compliance with FAA grant assurance by restricting the use to aviation-related activity.

COST/FUNDING SOURCE

N/A

ATTACHMENTS:		
Name:	Description:	Type:
Revised_Assignement_of_Lease__June_2016.doc	Consent of Assignment	Cover Memo
Recorded_quitclaim_deed.pdf	quitclaim deed	Cover Memo
Letter_requesting_assignment_of_Lease__June_2016.pdf	Request of Assignment	Cover Memo

“CONSENT”

CONSENT OF CITY OF COTTONWOOD TO
ASSIGNMENT OF TENANT RIGHTS IN
PARCEL NUMBER 406-08-064
Clyde and Lois Henderson to B and B Revocable Trust

Error,

When recorded return to:
City Clerk
City of Cottonwood
827 North Main Street
Cottonwood, AZ 86362

CONSENT OF CITY OF COTTONWOOD TO
ASSIGNMENT OF TENANT RIGHTS IN
PARCEL NUMBER 406-08-068E

Once fully executed, this Consent is legally binding as of _____ _____ 2016 (the "Effective Date").

DEFINITIONS

ASSIGNOR: Clyde and Lois E. Henderson

ASSIGNEE: B and B Revocable Trust

LANDLORD: City of Cottonwood

PROPERTY: as Described in Exhibit A, Lot 131 of the Cottonwood Airpark Tract 1 Parts A and B, APN: 406-08-064, Address: 650 S. Airpark Road, Cottonwood, AZ, 86326.

UNIT: All Improvements made to PROPERTY.

BACKGROUND

The Ground Lease

A. The City of Cottonwood, formerly known as the Town of Cottonwood, an Arizona municipality, is the "Landlord" under a Ground Lease Agreement dated May 5, 1983, which seeks to serve the public interest by providing opportunities for industrial development, and by promoting economic development and the creation of new employment opportunities.

- Cottonwood Airpark L.C. the successor to Cottonwood Airpark L.C. ("CALC") is the successor in interest to Cottonwood Airpark I, L.C. as successor in interest to Cottonwood Airpark, Inc., which was originally named as "Tenant" under the Ground Lease Agreement.

B. A memorandum of the Ground Lease dated May 23, 1983, was recorded January 4, 1984 in Book 1597, pages 576-581 and thereafter corrected by an instrument recorded July 1, 1985 in Book 1734, pages 11-15 of the records of the Yavapai County Recorder (the "Memorandum of Ground Lease").

C. The Ground Lease Agreement recorded in Book 4797, Page 649; which was amended by the First Amendment dated November 30, 1983; the Second Amendment dated March 12, 1985; the Third Amendment dated August 21, 1985; the Fourth Amendment dated February 7, 1989; and the Fifth Amendment dated January 1, 1993; the Sixth Amendment dated July 5, 1994; the Seventh Amendment dated September 16, 1997; the Eighth Amendment recorded December 22, 1998, in Book 3626, Page 140; the Ninth Amendment recorded October 1, 2001, in Book 3867, Page 214; the Tenth Amendment recorded March 17, 2003, in Book 4011, Page 367; the Eleventh Amendment recorded July 20, 2005, in Book 4288, Page 640; the Twelfth Amendment recorded July 20, 2005, in Book 4288, Page 644; the Thirteenth Amendment recorded July 20, 2005, in Book 4288, Page 649; the Fourteenth Amendment recorded January 20, 2006, in Book 4356, Page 475; the Fifteenth Amendment recorded August 21, 2006, in Book 4427, Page 538; the Sixteenth Amendment which was recorded September 3, 2008, in Book 4619, Page 633; and the Seventeenth Amendment which was recorded on February 27, 2009, in Book B-4651, Page 879. The Ground Lease Agreement and all Amendments are collectively referred to as the “Ground Lease”.

D. Thereafter by Assignment, recorded January 20, 2006, in Book 4356, Page 473 of Official Records, CALC assigned an interest as tenant under the Ground Lease of approximately 8.91 acres located south of Lot #122 of the Replat of Cottonwood Airpark Tract One Parts A & B described on the Results of Survey performed by SEC dated June 16, 2005, together with all rights, privileges, easements, appurtenances and improvements thereon to Backus Family Investments, L.L.C. (BFI) an Arizona Limited Liability Company.

E. The City of Cottonwood and Backus Family Investments (BFI) thereafter subdivided the above mentioned parcel of land which is now legally described as Cottonwood Airpark Tract One-Parts B & C, recorded in the office of the Yavapai County Recorder in Book 59, Page 57, dated March 13, 2007.

F. Thereafter by Assignment, dated May 18, 2007, as recorded in Book 4513 Page 834 of the Yavapai County Records, BFI assigned an interest as tenant under the Ground Lease of said PROPERTY together with all rights, privileges, easements, appurtenances and

improvements thereon to Clyde and Lois E. Henderson (HENDERSON).

G. Clyde and Lois E Henderson now wish to assign the rights possessed by HENDERSON under its ground lease with the City of Cottonwood said PROPERTY as further described in Exhibit A, attached hereto and incorporated by reference.

H. The Ground Lease requires the written consent of the City of Cottonwood to the assignment by HENDERSON of its rights as Tenant under the Ground Lease to ASSIGNEE. The City of Cottonwood has indicated that it will grant its consent to this transaction by execution and delivery of this Consent, in consideration for and subject to the covenants and conditions recited below.

I. Landlord, ASSIGNOR and ASSIGNEE hereby specifically reaffirm the following language from the First Amended Ground Lease dated May 5, 1983:

a. The City of Cottonwood ("Landlord") is an Arizona municipality which seeks to serve the public interest by providing opportunities for industrial development, and by promoting economic development and the creation of new employment opportunities.

b. Landlord and Tenant jointly will serve the public interest by providing residents of Cottonwood with access to improved job opportunities on the property.

AGREEMENT

Now, therefore, for valuable consideration received, The City of Cottonwood agrees that:

1. Consent. The City of Cottonwood hereby consents to the Assignment by Clyde and Lois Henderson to ASSIGNEE of its rights under the Ground Lease to PROPERTY. Such consent to be effective upon execution of this instrument by ASSIGNEE, provided, however, that during the entire Term of the Lease and any extensions thereof, any and all transfers shall be subject to review and approval by the Cottonwood City Council.

2. Acceptance of Assignment and Promise to Perform. By its signature below, ASSIGNEE hereby accepts, reaffirms and agrees to faithfully perform all of ASSIGNOR's duties, obligations and undertakings with respect to the PROPERTY and hereby agrees to the following conditions.

2.1 **Aviation Usage.** The Unit shall be primarily utilized for Aeronautical Use as defined, from time to time, by the Federal Aviation Administration. Owners and Occupant of the Unit shall not permit or keep on or in the Unit, except fuel inside a fuel tank of an aircraft or as approved in writing by the Board, any flammable, combustible or explosive material, chemical or substance in a manner, which may, by virtue of the type of material or quantity kept, increase the insurance rate or make insurance on any unit unobtainable or unenforceable. All such substances shall be kept in containers or other receptacles as directed by the applicable Fire Department, insurance agency, or other governmental authority. Further, no toxic materials of any kind in quantities exceeding that allowable by law shall be stored or kept in or on the Unit, or any portion thereof. All such material shall be kept on the Property in strict accordance with all applicable laws, statutes, rules, ordinances and regulations. The Unit may not be used as a residence.

2.2 **Inspection.** The City of Cottonwood shall be allowed to immediately enter into and inspect the Unit at any time should the City of Cottonwood determine in its sole discretion that an emergency exists. The City of Cottonwood shall also be allowed to inspect the UNIT and PROPERTY, during customary business hours, upon giving the ASSIGNEE (5) five days' notice of such inspection. Assignee hereby agrees to reasonably cooperate by opening the Unit to facilitate such an inspection.

2.3. **Rules and Regulations.** The City of Cottonwood reserves the right to adopt, amend and enforce reasonable rules and regulations governing the Leased Premises and the public area and facilities used by the Assignee. Such rules and regulations shall be consistent with the safety, security and overall public utility of the Airport and with the rules, regulations and orders of the Federal Aviation Administration or such other successor agency as may hereafter be designated by the Federal Government with respect to aircraft and airport regulation. Assignee agrees to obey by all such rules and regulations adopted or amended by the Landlord and specifically agrees that violation of any such rule and regulation shall constitute an Event of Default as provided in this Agreement.

2.4 **Part 77.** Assignee agrees to comply with the notification and review requirements contained in Part 77 of the Federal Aviation Regulations (14 C.F.R. Part 77) in the event any future structure or building is planned for the premises, or in the event of any planned modification or alteration of any

present or future building or structure situated on the premises. Assignee expressly agrees that it will not erect or permit the erection of any structure or object such that the object encroaches into any Part 77 airspace. In the event that Assignee allows or fails to mitigate an object that encroaches into any Part 77 airspace, the City of Cottonwood reserves the right to enter into the Leased premises and remove the offending structure or object at the expense of the Assignee.

2.5 **Non-Discrimination.** Assignee agrees that: (i) no person on the grounds of race, creed, color, national origin, sex, sexual orientation, age, or handicap shall be excluded from participation in, denied the benefits of, or be otherwise subject to discrimination in the use of said facilities; (ii) in the construction of any improvements on, over or under such land, in providing employment, and in the furnishing of services thereon, no person on the grounds of race, creed, color, national origin, sex, sexual orientation, age, or handicap shall be excluded from participation in, denied the benefits of, or otherwise be subject to discrimination; and (iii) Assignee shall use the premises in compliance with all of the requirements imposed by or pursuant to 41 C.F.R. Part 60, 49 USC 306, 49 C.F.R. Part 21, 49 C.F.R. Part 27, or the assurances contained in FAA Order 5100.38A as said laws, regulations, or assurances may be amended from time to time. Assignee assures that it will comply with pertinent statutes, executive orders and such rules as are promulgated to insure that no person shall, on the grounds of race, creed, color, national origin, sex, sexual orientation, age, or handicap be excluded from participating in any activity conducted with or benefiting from Federal assistance. This provision obligates the Assignee or its transferee for the period during which Federal assistance is extended to the airport program, except for Federal assistance as to provide, or is in the form of personal property or real property or interest therein or structures or improvements thereon. In these cases, this provision obligates the party or any transferee for the longer of the following periods: (a) the period during which the property is used by the sponsor or any transferee for a purpose for which Federal assistance is extended, or for another purpose involving the provision of similar services or benefits; or (b) the period during which the airport sponsor or any transferee retains ownership or possession of the property. Assigness shall furnish its accommodations and/or services on a fair, equal and not unjustly discriminatory basis to all users thereof, and it shall charge fair, reasonable and not unjustly discriminatory prices for each unit of service, provided, however, that

Assignee may be allowed to make reasonable and nondiscriminatory discounts, rebates or other similar types of price reductions to volume purchasers or users.

2.6 **Affirmative Action.** Regardless of the applicability of 14 C.F.R. Part 152 to the airport, Assignee assures that it will undertake an affirmative action program as described in 14 C.F.R. Part 152, subpart E to assure that no person shall, on the grounds of race, creed, color, national origin, sex or sexual orientation be excluded from participating in any employment activities covered in 14 C.F.R. Part 152, subpart E. Assignee assures that no person shall be excluded on these grounds from participating in or receiving the services or benefits of any program or activity covered by this subpart. Assignee agrees that in the event facilities are constructed, maintained or otherwise operated on the said property described in this Lease for a purpose for which a DOT program or activity is extended, or for another purpose involving the provision of similar service or benefits, Assignee shall maintain and operate such facilities and services in compliance with all requirements imposed pursuant to Title 49, Code of Federal Regulations, DOT, Subtitle A, Office of the Secretary, Part 21, Nondiscrimination in Federally Assisted Programs with the Department of Transportation - Effectuation of Title VI of the Civil Rights Act of 1964 as said regulations may be amended from time to time

2.7 Subordination Assignee agrees that this Assignment of Unit #2 shall be subordinate to the provisions and requirements of any existing or future agreement between the City of Cottonwood and the United States, or the City of Cottonwood and the State of Arizona, relative to the development, operation or maintenance of the Airport.

3. Release. In exchange for ASSIGNEE's faithful performance hereunder, and as of Effective Date of this Agreement, the City as Landlord under the Ground Lease, hereby:

3.1 Certifies that formal approval of the Assignment to ASSIGNEE is hereby granted by the City;

3.2 Acknowledges and agrees that ASSIGNOR has assigned its rights, duties and obligations to the PROPERTY to ASSIGNEE. Landlord agrees to look solely to ASSIGNEE for collection of all rents and other amounts arising from the Ground Lease for the PROPERTY after the Effective Date of this Consent and releases ASSIGNOR (and its predecessors)

as Tenant from all obligations or duties arising under the Ground Lease relative to the PROPERTY;

3.3 Acknowledges receipt of all rent and other amounts owed by Tenant to Landlord under the Ground Lease with respect to the PROPERTY as of the Effective Date;

3.4 Ratifies, affirms and confirms the validity of all other terms and conditions of the Ground Lease;

3.5 Confirms that, to Landlord's knowledge, there are no uncured defaults or breaches by Tenant under the Ground Lease;

3.6 Agrees that the property taxes for the UNIT shall be separately assessed and paid by ASSIGNEE;

3.7 Acknowledges that ASSIGNEE may encumber its leasehold interest in the PROPERTY to Purchase or construct certain improvements which may be subject to an encumbrance in favor of a Lender. Landlord agrees to provide notice to the Lender and in the event of a default by ASSIGNEE under the Ground Lease pertaining to the PROPERTY if requested by such Lender, and will execute a separate instrument to that effect if asked to do so.

3.8 Acknowledges that pursuant to Section 20 of the Ground Lease the address for the Tenant under the PROPERTY is;
1287 Settlers Circle
Cottonwood, AZ 86326
Phone Number 928-821-2249

3.9 **NAME OF ASSIGNEE:** B and B Revocable Trust

3.10 Affirms that the Term of the Lease to the Lot runs until December 31, 2033.

4. Ratification of Ground Lease with Respect to the Unit. Except as modified herein, the terms and conditions contained in the Ground Lease with respect to the PROPERTY are hereby ratified, confirmed and continue in full force and effect. The Term Commencement date of December 1983 began a 25- year term as to certain portions of the Lease and a 50- year Term as to certain other portions. The Lease also granted options for renewal. The parties intend to ratify and affirm the length of the Term and of all other rights and obligations under the Ground Lease with respect to the Unit. The parties represent that to the best of their knowledge and belief, there are no other amendments, modifications, supplements or other agreements or understandings with respect to the subject

matter of this Consent (i.e., the PROPERTY) except for those identified herein. The City as Landlord further acknowledges (i) that ASSIGNOR as Tenant has paid all rent due with respect to the PROPERTY, and (ii) that, to the City's knowledge, ASSIGNOR has fully performed all of its obligations and is in good standing under the Ground Lease with respect to the PROPERTY.

5. Further Documentation. The City agrees in good faith to execute such further or additional documents as become necessary or appropriate to carry out the intent and purpose of this Consent.

6. Counterparts and Facsimiles. This Consent may be executed by facsimile or in any number of counterparts, each of which shall be an original but all of which together shall constitute one and the same instrument.

This Consent is legally binding as of the Effective Date regardless of the actual date of signing, provided that it shall not take effect until it is fully executed by both the City and ASSIGNEE.

The undersigned Representatives of the City of Cottonwood hereby personally affirm and certify that there has been full compliance with all requirements for approval of the Assignment by the City and do further affirm and certify that this Consent is hereby approved, ratified and accepted by the City of Cottonwood.

THE CITY OF COTTONWOOD:

_____
Diane Joens, Mayor

Approved as to Form:

_____
Steve Horton, Esq.
City Attorney

Attest:

_____
Marianne Jiménez
City Clerk

The undersigned ASSIGNEE hereby personally affirms and accepts the duties of ASSIGNEE as outlined above.

NAME OF ASSIGNEE:
David Palm

Error,

By: _____
Brent Diehl
Trustee B and B Revocable Trust

Date: _____

State of Arizona)
) ss.
County of Yavapai)

On this the _____ of _____, 2016, before me, the undersigned Notary Public, personally appeared Brent Diehl, who is personally known to me or satisfactorily proved himself to be the person who executed the foregoing Consent, acknowledging that he executed the same for the purposes therein contained, being authorized so to do.

_____
Notary Public

My Commission Expires:

_____

Exhibit “A”
Legal Description

Lot # 131, parcel #406-08-064 of Cottonwood Airpark Tract-One Parts B&C as recorded in Book 59 Page 57 of the Yavapai County Official Records.

A.R.S. 11-1134(A)(4)

2016-0016079 QCD
04/07/2016 02:07:44 PM Page: 1 of 2
Leslie M. Hoffman
OFFICIAL RECORDS OF YAVAPAI COUNTY $15.00
CLYDE HENDERSON

Quitclaim

This Quitclaim Deed madeMarch 24, 2016, by
Clyde E Henderson and Lois E Henderson ("Transferor")
320 E Aspen St
Cottonwood AZ
86326

to:
B & B revocable Trust ("Transferee")
MAIL TO → 1287 Settlers Circle
Cottonwood Az, 86326

Transferor, in consideration of Ten Dollars and other good and valuable consideration, the receipt and sufficiency of which is hereby acknowledged, remises, releases, and forever quitclaims to Transferee all of the interest of Transferor, if any, in an to that real property located in the County of Yavapai, and State of Arizona, and more certainly described as follows: Lot 131, Cottonwood Airpark tract One- Parts B and C, according to the Plat of record in Book 59 of Maps, Page 57, records of Yavapai county, Arizona .

To have and to hold, all and singular the described property, together with the tenements, hereditaments, and appurtenances belonging to such property, or in anywise appertaining, and the rents, issues, and profits of such property to Transferee, and Transferee's heirs and assigns forever.

IN WITNESS WHEREOF, Transferor has executed this Quitclaim Deed on the date first above written.

Clyde E. Henderson Lois E Henderson

Clyde E Henderson and
Lois E Henderson

Acknowledgment

State of Arizona)
) ss
County of Yavapai)

A.R.S. 11-1134(A)(4)

2016-0016079 QCD
04/07/2016 02:07:44 PM Page: 1 of 2
Leslie M. Hoffman
OFFICIAL RECORDS OF YAVAPAI COUNTY $15.00
CLYDE HENDERSON

Quitclaim DEED

This Quitclaim Deed madeMarch 24, 2016, by
Clyde E Henderson and Lois E Henderson ("Transferor")
320 E Aspen St
Cottonwood AZ
86326

to:
B & B revocable Trust ("Transferee")
MAIL TO → 1287 Settlers Circle
Cottonwood Az, 86326

Transferor, in consideration of Ten Dollars and other good and valuable consideration, the receipt and sufficiency of which is hereby acknowledged, remises, releases, and forever quitclaims to Transferee all of the interest of Transferor, if any, in an to that real property located in the County of Yavapai, and State of Arizona, and more certainly described as follows: Lot 131, Cottonwood Airpark tract One- Parts B and C, according to the Plat of record in Book 59 of Maps, Page 57, records of Yavapai county, Arizona .

To have and to hold, all and singular the described property, together with the tenements, hereditaments, and appurtenances belonging to such property, or in anywise appertaining, and the rents, issues, and profits of such property to Transferee, and Transferee's heirs and assigns forever.

IN WITNESS WHEREOF, Transferor has executed this Quitclaim Deed on the date first above written.

Clyde E. Henderson Lois E Henderson

Clyde E Henderson and
Lois E Henderson

Acknowledgment

State of Arizona)
) ss
County of Yavapai)

Clyde E Henderson and Lois E Henderson
320 E Aspen St.
Cottonwood AZ, 86326
(928) 301-3367; (928) 300-9600

June 10, 2016

City of Cottonwood
Cottonwood Airpark

Dear City of Cottonwood:

I Clyde E Henderson, and I Lois E Henderson request to transfer the assignment of our current lease of:

Lot 131, Cottonwood Airpark, Tract One- Parts B and C, According to the Plat of record in Book 59 of Maps, Page 57, records of Yavapai County, Arizona

To:

B and B Revocable Trust, 1287 Settlers Circle Cottonwood AZ, 86326

Please Execute this transfer of assignment ASAP.

Sincerely,

Clyde E. Henderson

Clyde E Henderson

Lois E Henderson

DEANELL A GREGORY
Notary Public - Arizona
Yavapai County
My Commission Expires
September 20, 2019

Signed before me Deanell A. Gregory this 15th day of June 2016.

Deanell A. Gregory
exp. Sept 20, 2019

City of Cottonwood, Arizona
City Council Agenda Communication

Print

Meeting Date:	September 6, 2016
Subject:	Possible award and approval of the contract for IFB 2016-PW-02; Park Restroom Facilities Remodel (1) and New Construction (2).
Department:	Development Services
From:	Morgan Scott, Development Services Manager

REQUESTED ACTION

Award of contract for the Riverfront Park Restroom Facilities Remodel and New Construction of restroom facilities at Garrison Park and the Kids Park to Kinney Construction Services, Inc.

SUGGESTED MOTION

If the Council desires to approve this item the suggested motion is:

"I move to award the contract for the Riverfront Park Restroom Facilities Remodel and New Construction of the Garrison Park and Kids Park Restrooms to Kinney Construction Services, Inc. for a total contract price of $574,600.00, omitting the Garrison remodel."

BACKGROUND

Staff issued an Invitation for Bids on June 6th, 2016 for Construction Services. The intent of this solicitation was to enter into an agreement to remodel two public restroom facilities and construct two new restroom facilities within City owned parks.

New Facilities:

1) Garrison Park

2) Kids Park

Existing Facilities to be remodeled

1) Riverfront Park softball restroom

2) Garrison Park existing restroom

The solicitation was published in the newspaper in consecutive weeks and was posted on Public Purchase as well as the City website. Four (4) completed proposals were received by the deadline.

Although four facilities were in the original bid staff is recommending that the remodel of the Garrison Park facility not be awarded as part of this contract. The Contract was written to allow the City to award any or all portions of the contract. The existing Garrison Park restroom will likely only be used as storage and an irrigation control room in the future, and staff believes that the proposed cost of $59,700.00 is too much to pay for a storage facility. Staff will work with the contractor on a small change order after award the other portions of the contract for a roof, paint and other cosmetic improvements to the exterior of that building. The initial bids were:

Contractor	New Kids Park	New Garrison Park	Riverfront Remodel	Garrison Remodel	Total Construction Cost

Contractor	New Kids Park	New Garrison Park	Riverfront Remodel	Garrison Remodel	Total Construction Cost
Kinney Construction	$287,900.00	$191,900.00	$94,800.00	$59,700.00	**$634,300.00**
Loven Contracting	$329,579.00	$244,552.00	$88,959.00	$85,256.00	**$748,346.00**
Danson Construction	$317,000.00	$226,000.00	$68,000.00	$58,000.00	**$669,000.00**
Bayley Construction	$325,000.00	$185,000.00	$75,000.00	$130,000.00	**$715,000.00**

Recommended Award	**New Kids Park**	**New Garrison Park**	**Riverfront Remodel**	**Garrison Remodel**	**Total Construction Cost**
Kinney Construction	$287,900.00	$191,900.00	$94,800.00	$0.00	**$574,600.00**

JUSTIFICATION/BENEFITS/ISSUES

The award of the bid for the Riverfront Park Restroom Remodel and New Restroom Construction at Garrison Park and Kids Park will allow City staff to proceed with the construction phase of the Park Restrooms Project with a qualified contractor. The proposed bid to provide these services is five hundred seventy-four thousand, six hundred dollars ($574,600.00), plus an allowance not to exceed six thousand five hundred dollars for electrical tasks to be defined.

The construction budget for this project was $613,500 which leaves the project $38,900 under budget. However, there will likely be increases for change orders for the Garrison Park and Riverfront existing facilities.

COST/FUNDING SOURCE

Costs for this project are included in the Public Works contractual services budget for this year.

ATTACHMENTS:

Name:	Description:	Type:
Kinney_Construction.pdf	Contract	Cover Memo
Line_Item_Tabulation.xlsx	Bid Tabulation	Cover Memo

City of Cottonwood, Arizona

NOTICE OF FORMAL SOLICITATION

SOLICITATION TYPE:	**INVITATION FOR BIDS**
COMMODITY/SERVICE SOUGHT:	**Park Restroom Facilities Remodel (2) & New Construction (2)**
SOLICITATION INVITATION NO.:	**2016-PW-02**
BID DUE DATE AND TIME:	**July 8th, 2016 10:00 AM local Arizona time**
LOCATION:	**City of Cottonwood** **Administrative Services Department** **Purchasing Division** **816 N. Main Street** **Cottonwood, Arizona 86326**

Pursuant to Arizona Revised Statutes Section 34-201, notice is hereby given that the City of Cottonwood ("City") will accept bids with the intention of entering into a contract for: the new construction of a Garrison Park restroom facility located at 100 Brian Mickelsen Parkway; the remodel of a Garrison Park Comfort Station; the remodel of the Riverfront Park Softball Field restroom facility located at North 10th Street; and the new construction of a restroom facility located at the Cottonwood Kids Park located on 12th Street adjacent to the fairgrounds, (the "Project"). All facilities are located in Cottonwood, Arizona 86326.

Bids shall be enclosed in a sealed envelope clearly identified as **Park Restroom Facilities Remodel (2) and New Construction (2).** The name and address of the entity submitting the Bid shall also be clearly marked on the sealed envelope. It is the sole responsibility of the entity submitting the bid to see that his/her bid is received at the proper time. The bid shall be submitted to the **City of Cottonwood, Purchasing Division, 816 N Main Street, Cottonwood, AZ 86326 by 10:00 AM on Friday, July 8th, 2016**, at which time all bids shall be opened and the name of each Bidder and the amount of its bid shall be publicly read. Late bids will not be considered and will be returned unopened.

Contractors desiring to submit bids may obtain PDF versions of the plans and specifications and other information pertaining to the Project via email by contacting the Purchasing Division at jcook@Cottonwoodaz.gov. Documents can also be obtained through the Public Purchase website at www.publicpurchase.com.

A pre-bid meeting will be held on Wednesday, June 22nd 2016, at 10:00 a.m. and will start at the facility site located at 100 Brian Mickelsen Parkway, Cottonwood, Arizona, 86326. **Attendance at this meeting is not-mandatory, but is recommended.**

Every bid shall be accompanied by a certified check, cashier's check or surety bond for ten percent (10%) of the amount of the bid as a guarantee that if selected, the Bidder will enter into a contract to construct the Project in accordance with the plans and specifications. Any surety bond submitted in compliance with this requirement shall be executed by a surety company or companies holding a certificate of authority to transact surety business in this state issued by the director of the Department of Insurance pursuant to Arizona Revised Statutes Title 20, Chapter 2, Article 1; shall follow the form prescribed in Arizona Revised Statutes Section 34-201; and all liabilities on the bond shall be determined in accordance with that section as if it were copied at length therein.

The City of Cottonwood will select a vendor based on the lowest responsible and responsive bid. In accordance with Arizona Revised Statutes Section 34-201(A) (4), the City reserves the right to reject any or all bids or to withhold the award for any reason the City determines.

Publish Date: Verde Independent – Sunday, June 12th, 2016 and Sunday, June 19th, 2016

OFFER

The undersigned (the "Bidder") hereby offers this Bid as an offer to contract with the City under the terms and conditions set forth below and certifies that Bidder has read, understands and agrees to fully comply with, and be contractually bound by, all terms and conditions as set forth in this Invitation For Bids ("IFB"), the Contract formed hereby (as defined below) and any amendments thereto, together with all Exhibits, Specifications, Plans and other documents included as part of this Contract (the "Contract Documents").

Arizona Transaction (Sales) Privilege Tax License Number: 03028153-W Federal Employer Identification Number: 86-0151847 KINNEY CONSTRUCTION SERVICES, INC. Contractor Name 121 E BIRCH AVE, SUITE 500 Address FLAGSTAFF AZ 86001 City State Zip Code	For Clarification of this Bid contact: Name: TIM KINNEY Telephone: 928.779.2820 Facsimile: 928.773.4646 Email: TK@KINNEYCONSTRUCTION.NET Authorized Signature for Contractor Tim Kinney Printed Name PRESIDENT Title

ACCEPTANCE OF OFFER AND NOTICE OF AWARD (FOR CITY OF COTTONWOOD USE ONLY)

Effective Date:_____ Contract No._____ Official File:_____

CITY OF COTTONWOOD, an Arizona municipal corporation

_____
Diane Joens, Mayor

ATTEST:

_____
Marianne Jimẽnez, City Clerk

APPROVED AS TO FORM:

_____
Steve Horton, City Attorney

ARTICLE I - DEFINITIONS

For purposes of this Invitation for Bids, the following definitions shall apply:

1.1 "Bid" or "Offer" means a responsive bid or quotation submitted by a Bidder in response to this Invitation for Bids.

1.2 "Bid Deadline" means the date and time set forth on the cover of this IFB for the City Clerk to be in actual possession of the sealed Bids.

1.3 "Bid Opening" means the date and time set forth on the cover of this Invitation for Bids for opening of sealed Bids.

1.4 "Bidder" means any person or firm submitting a competitive Bid in response to this IFB.

1.5 "City" means the City of Cottonwood, an Arizona municipal corporation.

1.6 "City Representative" means the City employee who has specifically been designated to act as a contact person to the City's Procurement Administrator, and who is responsible for monitoring and overseeing the Contractor's performance under the Contract and for providing information regarding details pertaining to the Work.

1.7 "Confidential Information" means that portion of a Bid, proposal, Offer, Specification or protest that contains information that the person submitting the information believes should be withheld, provided (i) such person submits a written statement advising the City of this fact at the time of the submission and (ii) the information is so identified wherever it appears.

1.8 "Contract" means, collectively, the (i) Offer/Bid, (ii) this IFB, including all exhibits, (iii) the Notice of Award, (iv) the Notice to Proceed or Purchase Order(s), (v) any approved Addendum, Change Order or Amendment, (vi) the Contractor's Certificates of Insurance and a copy of the Declarations Page(s) of the insurance policies, (vii) the Certificate of Completion and (viii) any Plans, Specifications or other documents attached, appended or incorporated herein by reference. Alternate or optional bid items will become part of the Contract only if they are accepted by the City in writing on the Price Sheet.

1.9 "Contractor" means the individual, partnership, corporation or limited liability company who has submitted a Bid in response to this IFB and who, as a result of the competitive bidding process, is awarded a contract for Materials or Services by the City.

1.10 "Contract Time" means the time period during which the Contractor must complete all of the Work related to the Project.

1.11 "Days" means calendar days unless otherwise specified.

1.12 "Engineer" means the City Engineer or authorized designee.

1.13 "Final Completion" shall be defined as set forth in Section 3.17 and shall occur not later than 30 Days from the date of Substantial Completion unless otherwise designated by the Contract Administrator and subject to modification by changes in the Work as provided in Section 3.15 below.

1.14 "Invitation for Bids" or "IFB" means this request by the City for participation in the competitive bidding process according to all documents, including those attached or incorporated herein by reference, utilized for soliciting Bids for the Materials and/or Services in compliance with the City's Procurement Code.

1.15 "Materials" means any personal property, including equipment, materials, replacements and supplies provided by the Contractor in conjunction with the Contract and shall include, in addition to Materials incorporated in the Project, equipment and other material used and/or consumed in the performance of the Work.

1.16 "Multiple Award" means an award of an indefinite quantity contract for one or more similar products, commodities or Services to more than one Bidder.

1.17 "Price" means the total expenditure for the defined Project, inclusive of all Materials, commodities or Services.

1.18 "Procurement Administrator" means a City employee, as designated on the cover of this IFB, who has specifically been designated to act as a contact person to the Bidders and/or Contractor relating to their IFB.

1.19 "Procurement Agent" means the City Manager or authorized designee.

1.20 "Procurement Code" means the City's Procurement Code, as amended from time to time.

1.21 "Project" means the purpose and Work described as set forth in Section 2.1, in the "Purpose/Scope of Work" of the IFB.

1.22 "Punch List" means that list of items provided by City to Contractor at the time of Substantial Completion indicating items to be completed or corrected, including the time for completion or correction by Contractor after Substantial Completion.

1.23 "Services" means the furnishing of labor, time or effort by a Contractor, not involving the delivery of a specific end product other than reports which are merely incidental to the required performance and as further defined in the Contract. This term does not include "professional and technical services" as defined in the Procurement Code.

1.24 "Specification" means any description of the physical characteristics, functional characteristics, or the nature of a commodity, product, supply or Services. The term may include a description of any requirements for inspecting, testing, or preparing a supply or service item for delivery.

1.25 "Subcontractor" means those persons or groups of persons having a direct contract with the Contractor to perform a portion of the Work and those who furnish Materials according to the plans and/or Specifications required by this Contract.

1.26 "Substantial Completion" shall be defined as set forth in Section 3.16 below and shall occur not later than the date set forth in the Schedule, subject to modification by changes in the Work as provided in Section 3.15 below.

1.27 "Vendor" means any firms, entities or individuals desiring to prepare a responsive Bid in response to this Invitation for Bids.

1.28 "Work" means all labor, Materials and equipment incorporated or to be incorporated in the Project that are necessary to accomplish the construction required by this Contract.

ARTICLE II – BID PROCESS; BID AWARD

2.1 Purpose/Scope of Work. The Work included in this Project consists of the new construction of a Garrison Park restroom facility located at 100 Brian Mickelsen Parkway; the remodel of existing restroom at Garrison Park; the remodel of the Riverfront Park Softball Field restroom facility located at North 10th Street;

and the new construction of a restroom facility located at the Cottonwood Kids Park located on 12th Street adjacent to the fairgrounds, (the "Project"). All facilities are located in Cottonwood, Arizona 86326.

2.2 Amendment of IFB. Except as set forth in Section 3.56 below, no alteration may be made to this IFB or the resultant Contract without the express, written approval of the City in the form of an official IFB addendum or Contract amendment. Any attempt to alter this IFB/Contract without such approval is a violation of this IFB/Contract and the City Procurement Code. Any such action is subject to the legal and contractual remedies available to the City including, but not limited to, Contract cancellation and suspension and/or debarment of the Bidder or Contractor.

2.3 Preparation/Submission of Bid. Bidders are invited to participate in the competitive bidding process for the Project specified in this IFB. Bidders shall review their Bid submissions to ensure the following requirements are met.

A. Irregular/Non-responsive Bids. The City will consider as "irregular" or "non-responsive" and shall reject any Bid not prepared and submitted in accordance with the IFB and Specifications, or any Bid lacking sufficient information to enable the City to make a reasonable determination of compliance with the Specifications. Unauthorized or unreasonable exceptions, conditions, limitations, or provisions shall be cause for rejection. Bids may be deemed non-responsive at any time during the evaluation process if, in the sole opinion of the Procurement Agent, any of the following are true:

1. Bidder does not meet the minimum required skill, experience, or requirements to perform the Work or provide the Materials.

2. Bidder has a past record of failing to fully perform or fulfill contractual obligations.

3. Bidder cannot demonstrate financial stability.

4. Bid submission contains false, inaccurate or misleading statements that, in the opinion of the Procurement Agent. are intended to mislead the City in its evaluation of the Bid.

B. Specification Minimums. Bidders are reminded that the Specifications in this IFB are the minimum levels required and that Bids submitted must be for products that meet or exceed the minimum level of all features specifically listed in this IFB. Bids offering less than the minimums specified will be deemed not responsive. It shall be the Bidder's responsibility to carefully examine each item listed in the Specifications.

C. Required Submittal. Bidders shall provide **all of the following** documents to be considered a responsive Bid:

1. Complete, fully executed original of this IFB, with the Offer signed in ink by a person authorized to bind the Bidder.

2. Price Sheet.

3. Bid Bond.

4. Licenses; /DBE & MBE Status.

5. References.

6. Federal Requirements, if applicable.

7. Acknowledgment for each Addendum received, if any.

D. Bidder Responsibilities. All Bidders shall (1) examine the entire Bid package, (2) seek clarification of any item or requirement that may not be clear, (3) check all responses for accuracy before submitting a Bid and (4) submit the entire, completed Bid package by the official Bid Deadline. Late Bids shall not be considered. Bids not submitted with an **original, signed** Offer page by a person authorized to bind the Bidder shall be considered non-responsive. Negligence in preparing a Bid shall not be good cause for withdrawal after the Bid Deadline.

E. Sealed Bids. All Bids shall be sealed and clearly marked with the IFB title and number on the lower left hand corner of the mailing envelope. A return address must also appear on the outside of the sealed Bid.

F. Address. All Bids shall be directed to the following address: City of Cottonwood Purchasing Division, 816 N. Main Street, Cottonwood, Arizona 86326, or hand-delivered to the Administrative Services office located at the same address.

G. Bid Forms. All Bids shall be on the forms provided in this IFB. It is permissible to copy these forms if required. Telegraphic (facsimile), electronic (email) or mailgram Bids will not be considered.

H. Modifications. Erasures, interlineations, or other modifications in the Bid shall be initialed in original ink by the authorized person signing the Bid.

I. Withdrawal. At any time prior to the specified Bid Opening, a Bidder (or designated representative) may amend or withdraw its Bid. Facsimile, electronic (email) or mailgram Bid amendments or withdrawals will not be considered. No Bid shall be altered, amended or withdrawn after the specified Bid Deadline, unless otherwise permitted pursuant to the City Procurement Code.

2.4 Inquiries; Interpretation of Plans, Specifications and Drawings.

A. Inquiries. Any question related to the IFB, including any part of the Plans, Specifications, Scope of Work or other Contract Documents, shall be directed to the City Representative and Procurement Administrator whose names appear on the cover page of this IFB. Questions shall be submitted in writing by the date indicated on the cover page of this IFB; the City will not respond to any inquiries submitted later than the Final Date for Inquiries. The Vendor submitting such inquiry will be responsible for its prompt delivery to the City. Any correspondence related to the IFB shall refer to the title and number, page and paragraph. However, the Bidder shall not place the IFB number and title on the outside of any envelope containing questions, because such an envelope may be identified as a sealed Bid and may not be opened until the Bid Opening. Any interpretations or corrections of the proposed Contract Documents will be made only by addenda duly approved and issued by the City. The City will not be responsible for any other explanations or interpretations of the Contract Documents.

1.1. B. Addenda. It shall be the Bidder's responsibility to check for addenda issued to this IFB. Any addendum issued by the City with respect to this IFB will be available via the City's vendor registration/notification system or other means. Vendors (Offerors) are encouraged to register via the on-line vendor registration system at www.publicpurchase.com, in order to automatically receive notification of Solicitation Addendum or notice of other solicitation opportunities. Select REGISTER OR LOG-IN NOW. A Vendor (Offeror) who is not so registered must contact the Purchasing Office to make other arrangements to receive notice of Addenda to this Solicitation. Vendors (Offerors) who submit offers without acknowledgement of addenda may have their responses rejected.

C. Approval of Substitutions. The Materials, products, and equipment described in this IFB establish a standard or required function, dimension, appearance and quality to be met by any proposed substitution. No substitute will be considered unless written Substitution/Equal Request in the form attached

hereto as Exhibit B, has been received by the City Representative at least ten days prior to the Bid Deadline. Each such request shall include the name of the Material or equipment for which it is to be substituted and a complete description of the proposed substitute, including any drawings, performance and test data and any other information necessary for evaluation of the substitute. If a substitute is approved, the approval shall be by written addendum to the IFB. Bidder shall not rely upon approvals made in any other manner.

D. Use of Equals. When the Specifications for materials, articles, products and equipment include the phrase *"or equal,"* Bidder may bid upon and use materials, articles, products and equipment that will perform equally the requirements imposed by the general design. The Contract Administrator will have the final approval of all materials, articles, products and equipment proposed to be used as an "equal." No such "equal" shall be purchased or installed without prior, written approval from the Contract Administrator. No "equal" will be considered unless a written Substitution/Equal Request, in the form attached hereto as Exhibit B, has been received by the City Representative at least ten days prior to the Bid Deadline. The request shall include the name of the material or equipment for which the item is sought to be considered an equal and a complete description of the proposed equal including any drawings, cuts, performance and test data and any other information necessary for evaluation of the equal. All approval of equals shall be issued in the form of written addendum or amendment, as applicable, to this IFB or the Contract.

E. Bid Quantities. It is expressly understood and agreed by the parties hereto that the quantities of the various classes of Services and/or Materials to be furnished under this Contract, which have been estimated as stated in the Bidders' Offer, are only approximate and are to be used solely for the purpose of comparing, on a consistent basis, the Bidders' Offers presented for the Work under this Contract. The selected Contractor agrees that the City shall not be held responsible if any of the quantities shall be found to be incorrect and the Contractor will not make any claim for damages or for loss of profits because of a difference between the quantities of the various classes of Services and/or Materials as estimated and the Services and/or Materials actually provided. Contractor is responsible for ensuring that all Materials contained in the Plans for the project are bid on the Price Sheet. Contractor shall bring any potential discrepancy between the Plans and the Price Sheet to the City's attention, either at the Prospective Bidders' Conference or by written inquiry, as set forth in Subsection 2.4(A) above. If any error, omission or misstatement is found to occur, the same shall not (1) invalidate the Contract or the whole or any part of the Scope of Work, (2) excuse Contractor from any of the obligations or liabilities hereunder or (3) entitle Contractor to any damage or compensation except as may be provided in this Contract.

2.5 Prospective Bidders' Conference. A Prospective Bidders' Conference may be held. If scheduled, the date and time of the Prospective Bidders' Conference will be indicated on the cover page of this IFB. The Prospective Bidders' Conference may be designated as mandatory or non-mandatory on the cover of this IFB. Bids shall not be accepted from Bidders who do not attend a mandatory Prospective Bidders' Conference. Bidders are strongly encouraged to attend those Prospective Bidder's Conferences designated as non-mandatory. The purpose of the Prospective Bidders' Conference will be to clarify the contents of the IFB in order to prevent any misunderstanding of the City's requirements. Any doubt as to the requirements of this IFB or any apparent omission or discrepancy should be presented to the City at the Prospective Bidders' Conference. The City will then determine if any action is necessary and may issue a written amendment or addendum to the IFB. Oral statements or instructions will not constitute an amendment or addendum to the IFB.

2.6 New Materials. All Materials to be provided by the Contractor and included in the Bid shall be new, unless otherwise stated in the Specifications.

2.7 Prices. Work shall be performed at the unit prices as set forth in the Price Sheet attached hereto as Exhibit C and incorporated herein by reference. Bid prices shall be submitted on a per unit basis by line item, when applicable and include all applicable sales tax. In the event of a disparity between the unit price and extended price, the unit price shall prevail. **NOTE: All pricing blanks must be filled in. Empty or unfilled spaces in the Bid Price Sheet shall result in a determination that a Bid is non-responsive.**

2.8 Payment; Discounts. Any Bid that requires payment in less than 30 Days shall not be considered. Payment discounts of 30 Days or less will not be deducted from the Bid Price in determining the low Bid. The City shall be entitled to take advantage of any payment discount offered, provided payment is made within the discount period. Payment discounts shall be indicated on Price Sheet.

2.9 Taxes. The City is exempt from Federal Excise Tax, including the Federal Transportation Tax. Sales tax, if any, shall be included in the unit price for each line item. It shall not be considered a lump sum payment item. Bidder should not include tax on any allowances. It is the sole responsibility of the Bidder to determine any applicable State tax rates and calculate the tax accordingly. Failure to accurately tabulate any applicable taxes may result in a determination that a Bid is non-responsive. The Bidder shall not rely on, and shall independently verify, any tax information provided by the City.

2.10 Federal Funding. It is the responsibility of the Bidder to verify and comply with federal requirements that may apply to the Work (the "Federal Requirements"). It is also the responsibility of the Bidder to incorporate any necessary amounts in the Bid to accommodate for required federal record-keeping, necessary pay structures or other matters related to the Federal Requirements. Federal Requirements, if any, shall be attached hereto as Exhibit D. In addition to any applicable Federal Requirements, this procurement is subject to a number of state and City regulations. In general, where these rules conflict, the more stringent law or rule applies.

2.11 Cost of Bid/Proposal Preparation. Bids submitted for consideration should be prepared simply and economically, providing adequate information in a straightforward and concise manner. The City does not reimburse the cost of developing, presenting or providing any response to this solicitation; the Bidder is responsible for all costs incurred in responding to this IFB. All materials and documents submitted in response to this IFB become the property of the City and will not be returned.

2.12 Public Record. All Bids shall become the property of the City. After Contract award, Bids shall become public records and shall be available for public inspection in accordance with the City's Procurement Code, except that any portion of a Bid that was designated as confidential pursuant to Section 2.13 below shall remain confidential from and after the time of Bid opening to the extent permitted by Arizona law.

2.13 Confidential Information. If a Vendor/Bidder believes that a Bid, Specification, or protest contains information that should be withheld from the public record, a statement advising the Procurement Agent of this fact shall accompany the submission and the information shall be clearly identified. The information identified by the Vendor or Bidder as confidential shall not be disclosed until the Procurement Agent makes a written determination. The Procurement Agent shall review the statement and information with the City Attorney and shall determine in writing whether the information shall be withheld. If the City Attorney determines that it is proper to disclose the information, the Procurement Agent shall inform the Vendor or Bidder in writing of such determination.

2.14 Vendor Licensing and Registration. Prior to the award of the Contract, the successful Bidder shall (A) be registered with the Arizona Corporation Commission and authorized to do business in Arizona and (B) have a completed City busines registration on file with the City Financial Services Department. Bidders shall provide license and certification information with the Bid, attached as Exhibit E and incorporated herein by reference. Upon the City's request, corporations, limited liability companies, partnerships or other entities shall provide Certificates of Good Standing from the Arizona Corporation Commission.

2.15 Bidder Qualifications.

A. Experience and References. Bidder must demonstrate successful completion of at least three similar projects within the past 60 months, one of which must have a dollar value of at least 75% of the total bid for this Project as set forth in the Price Sheet, attached as Exhibit C. Total bid price does not include any City allowances identified. For the purpose of this Solicitation, "successful completion" means completion

of a project within the established schedule and budget and "similar projects" resemble this Project in size, nature and scope. References for these three projects shall be listed on the sheet attached hereto as Exhibit F and incorporated herein by reference. *These references will be checked*, and it is Bidder's responsibility to ensure that all information is accurate and current. Bidder authorizes the City's representative to verify all information from these references and releases all those concerned from any liability in connection with the information they provide.

B. Investigation. The City's representative may conduct any investigation deemed necessary to determine the Bidder's ability to perform the Work in accordance with the Contract Documents. The three lowest Bidders may be requested to submit additional documentation within 72 hours (or as specified) to assist the City in its evaluation.

2.16 Certification. By submitting a Bid, the Bidder certifies:

A. No Collusion. The submission of the Bid did not involve collusion or other anti-competitive practices.

B. No Discrimination. It shall not discriminate against any employee or applicant for employment in violation of Federal Executive Order 11246.

C. No Gratuity. It has not given, offered to give, nor intends to give at any time hereafter, any economic opportunity, future employment, gift, loan, gratuity, special discount, trip favor or service to a City employee, officer, agent or elected official in connection with the submitted Bid or a resultant Contract. In the event that the resultant Contract is canceled pursuant to this provision, the City shall be entitled, in addition to any other rights and remedies, to recover and withhold from the Contractor an amount equal to 150% of the gratuity.

D. Financial Stability. It is financially stable, solvent and has adequate cash reserves to meet all financial obligations including any potential costs resulting from an award of the Contract.

E. No Signature/False Statement. The signature on the Bid and the Vendor Information Form is genuine. Failure to sign the Bid and the Vendor Information Form, or signing either with a false statement, shall void the submitted Bid and any resulting Contract, and the Bidder may be debarred from further bidding in the City.

2.17 Bid Bond. All Vendors desiring to prepare a responsive Bid shall submit a non-revocable bid security payable to the City in the amount of ten percent (10%) of the total Bid Price. This security shall be in the form of a bid bond, certified check or cashier's check and must be in the possession of the City Representative by the Bid Deadline. All bid security from Contractor(s) who have been issued a Notice of Award shall be held until the successful execution of all required Contract Documents and bonds. If the Contractor fails to execute the required contractual documents and bonds within the time specified, or ten Days after Notice of Award if no period is specified, the Contractor may be found to be in default and the Contract terminated by the City. In case of default, the City reserves all rights inclusive of, but not limited to, the right to purchase material and/or to complete the Work and to recover any actual excess costs associated with such completion from the Contractor. All bid bonds shall be executed in the form attached hereto as Exhibit G, duly executed by the Bidder as Principal and having as Surety thereon a Surety company holding a Certificate of Authority from the Arizona Department of Insurance to transact surety business in the State of Arizona. Individual sureties are unacceptable. All insurers and sureties shall have, at the time of submission of the proposal, an A.M. Best's Key Rating Guide of "A-" or better as currently listed in the most recent Best Key Guide, published by the A.M. Best Company. As soon as is practicable after the completion of the evaluation, the City will (A) issue a Notice of Award for those Offers accepted by the City and (B) return all checks or bonds to those Bidders who have not been issued a Notice of Award.

2.18 Award of Contract.

A. Multiple Award. The City may, at its sole discretion, accept Bidder's Offer as part of a Multiple Award.

B. Evaluation. The evaluation of this Bid will be based on, but not limited to, the following: (1) compliance with Specifications, (2) Price, including alternates, if any, but excluding taxes and "as-needed" services requested by the City and (3) Bidder qualifications to perform the Work.

C. Waiver, Rejection, Reissuance. Notwithstanding any other provision of this IFB, the City expressly reserves the right to: (1) waive any immaterial defect or informality, (2) reject any or all Bids or portions thereof and (3) cancel or reissue an IFB.

D. Offer. A Bid is a binding offer to contract with the City based upon the terms, conditions and Specifications contained in this IFB and the Bidder's responsive Bid, unless any of the terms, conditions, or Specifications are modified by a written addendum or Contract amendment. Bids become binding Contracts when the Acceptance of Offer and Notice of Award is executed in writing by the City. Bidder Offers shall be valid and irrevocable for **90** days after the Bid Opening.

E. Protests. Any Bidder may protest this IFB, the proposed award of a Contract, or the actual award of a Contract. All protests will be considered in accordance with the City Procurement Code.

ARTICLE III – GENERAL TERMS AND CONDITIONS

PART A - GENERAL

3.1 Plans and Specifications to Successful Contractor. The successful Contractor may obtain electronic documents of Plans and Specifications for this Project from the Contract Administrator at no cost.

3.2 Contract Time. The Contract Time for this Project shall be 180 days from the Notice to Proceed. All Work on the Project shall be completed on or before the expiration of the Contract Time.

3.3 Pre-Construction Conference. Within 30 days of the issuance of the Notice of Award, the Contractor shall attend a pre-construction conference. The City will contact the Contractor to schedule a specific date, time and location for the pre-construction conference. The purpose of this conference is to outline specific items and procedures and to address items that require special attention on the part of the Contractor. The Contractor may also present proposed variations in procedures that the Contractor believes may (A) improve the Project, (B) reduce cost or (C) reduce inconvenience to the public. Any necessary coordination and procedures for construction inspection and staking will be addressed during the pre-construction conference. The Contractor will be required to provide the following items at, or prior to, the pre-construction conference, each of which is subject to review and approval by the Contract Administrator:

A. Key Personnel; Subcontractors. A list of the names and emergency telephone numbers of all proposed key personnel, Subcontractors and suppliers that the Contractor intends to utilize on the Project, in the form attached hereto as Exhibit H and incorporated herein by reference. The term "Key Personnel" means individuals who will be directly assigned to this Project and includes, but is not limited to, the owner, principals, project manager, project superintendent, scheduler, construction engineer and supervisory personnel. At least two of the Bidder's Key Personnel must have a minimum of three years' experience in similar projects (defined above) and the scheduler must have experience in employing scheduling techniques appropriate for this Project. Resumes of Key Personnel shall be submitted upon request by the City's representative. Proposed Subcontractors shall be qualified and have the requisite professional or technical licenses and be licensed to do business in the State of Arizona. The list shall include such information on the professional background of each of the assigned key individuals as may be requested by the City Representative. Such key personnel and Subcontractors shall be satisfactory to the Contract Administrator and shall not be changed except with the consent of the Contract Administrator. Additionally, the Contract Administrator shall have the right to request that the

Contractor personnel and Subcontractors be removed from the Project if, in the Contract Administrator's sole discretion, such personnel or Subcontractor(s) are detrimental to the Project delivery process. Upon receipt of such request, the Contractor shall remove such personnel or Subcontractor(s) unless the Contractor can provide the City with sufficient documentation to prove it is commercially impractical to replace the personnel or Subcontractor(s) with substitute personnel possessing similar qualifications. The Contract Administrator's approval of substituted personnel or Subcontractor(s) shall not be unreasonably withheld.

B. Progress Schedule. A construction progress schedule showing the estimated time for start and completion of the major items of Work.

C. Payment Schedule. A payment schedule showing the estimated dollar volume of Work for each calendar month during the life of the Project.

D. Traffic Control. A written proposal outlining the intended plans for traffic control and for maintaining continuous access to residences and businesses along the construction site.

E. Drawings, Materials & Equipment. An itemized list of all required shop drawings, material and equipment submittals and a schedule indicating the dates each of these items will be transmitted to the City for review.

3.4 Notice to Proceed. Within 45 days of the issuance of the Notice of Award the City may issue a written Notice to Proceed. The Notice to Proceed shall stipulate the actual Contract start date, the Contract Time and the dates of Substantial Completion and Final Completion. The time required for the Contractor to obtain permits, licenses and easements shall be included in the Contract Time and shall not be justification for a delay claim by the Contractor. The time required for the Contractor to prepare, transmit and obtain approval of applicable submittals shall be included in the Contract Time and shall not be justification for a delay claim by the Contractor. No Work shall be started until after all required permits, licenses, and easements have been obtained. The Contractor shall notify the Contract Administrator, in writing, at least 72 hours before the following events:

A. Commencement. The start of construction.

B. City Services Shut Down. Shutdown of City water, sewer, drainage, irrigation and/or traffic control facilities.

3.5 Laws and Regulations. The Contractor shall keep fully informed of all rules, regulations, ordinances, statutes or laws affecting the Work herein specified, including existing and future (A) City and County ordinances and regulations, (B) State and Federal laws and (C) Occupational Safety and Health Administration ("OSHA") standards.

3.6 Rights-of-Way. The Contractor shall obtain a right-of-way permit for any of the Work completed in the public right-of-way. The Contractor will be responsible for any required agency permits. The City will provide any necessary easements for Work specified under this Contract, and the Contractor shall not enter or occupy with workers, tools, equipment or materials any private ground outside the property of the City without the written consent of the owner thereof. The Contractor, at its own expense, is responsible for the acquisition of any additional easements or rights-of-way.

3.7 Inspection, Safety and Compliance. Each Contractor must inform itself fully of the conditions relating to the construction of the Project and the employment of labor thereon. Failure to do so will not relieve the Contractor of its obligation to furnish all material and labor necessary to carry out the provisions of this Contract. Insofar as possible in carrying out its work, the Contractor must employ such methods or means as will not cause any interruption of or interference with the Work of any other contractor. Contractor affirms that it has inspected the jobsite and has thoroughly reviewed the Contract including, without limitation, the Specifications listed on Exhibit A, as the same may be revised by the City, and is not relying on any opinions or representations of City.

Contractor agrees to perform and complete such Work in strict accordance with the Contract and under the general direction of the City. Contractor agrees that any exclusions of any Work must be approved in writing by the City prior to acceptance of this Contract or same shall not be excluded hereunder. Contractor is responsible for all safety precautions and programs and shall provide all protection and necessary supervision to implement said precautions and programs. Contractor shall take all reasonable precautions for the safety of and provide reasonable protection to prevent damage, injury or loss to: (A) employees or others on the Project, (B) the Work and materials and (C) other property at the Project or adjacent thereto. Contractor shall designate a responsible person on the Project whose duty shall be prevention of accidents. Contractor shall provide all competent supervision necessary to execute all Work and any Work incidental thereto in a thorough, first-class, workmanlike manner. It is Contractor's responsibility that all of the Work and any Work incidental thereto conforms to, and is performed in accordance with, all applicable Federal, State, County and City laws, codes, ordinances, regulations (including National Pollutant Discharge Elimination System and air pollution standards) and orders of public authorities bearing on performance of the Work.

3.8 Traffic Regulations. All traffic affected by the Work under this Contract shall be regulated in accordance with the Manual on Uniform Traffic Control Devices (MUTCD) Part VI, latest revision thereto. Traffic control signs will be used at all times when work is being performed or when a potential hazard is present. When necessary certified flaggers will be used to control traffic using a stop and slow paddle. Signs and flaggers (per MUTCD) are required when a lane is blocked or encroached upon. For all work impeding or impacting traffic (vehicular or pedestrian) a Traffic Control Plan must be approved by the City before any work begins. The City of Cottonwood will not provide signs, barricades, or other equipment for use in traffic control. Only rubber tired equipment shall be used on pavement, except crawler equipment using street pads.

3.9 Indemnification. To the fullest extent permitted by law, the Contractor shall indemnify and hold harmless the City and each council member, officer, employee or agent thereof (the City and any such person being herein called an "Indemnified Party"), for, from and against any and all losses, claims, damages, liabilities, costs and expenses (including, but not limited to, reasonable attorneys' fees, court costs and the costs of appellate proceedings) to which any such Indemnified Party may become subject, under any theory of liability whatsoever ("Claims") to the extent that such Claims (or actions in respect thereof) are caused by the negligent acts, recklessness or intentional misconduct of the Contractor, its officers, employees, agents, or any tier of subcontractor in connection with Contractor's work or services in the performance of this Agreement. The amount and type of insurance coverage requirements set forth below will in no way be construed as limiting the scope of the indemnity in this Section.

3.10 Insurance.

A. General.

1. Insurer Qualifications. Without limiting any obligations or liabilities of Contractor, Contractor shall purchase and maintain, at its own expense, hereinafter stipulated minimum insurance with insurance companies authorized to do business in the State of Arizona pursuant to ARIZ. REV. STAT. § 20-206, as amended, with an AM Best, Inc. rating of A- or above with policies and forms satisfactory to the City. Failure to maintain insurance as specified herein may result in termination of this Contract at the City's option.

2. No Representation of Coverage Adequacy. By requiring insurance herein, the City does not represent that coverage and limits will be adequate to protect Contractor. The City reserves the right to review any and all of the insurance policies and/or endorsements cited in this Contract but has no obligation to do so. Failure to demand such evidence of full compliance with the insurance requirements set forth in this Contract or failure to identify any insurance deficiency shall not relieve Contractor from, nor be construed or deemed a waiver of, its obligation to maintain the required insurance at all times during the performance of this Contract.

3. Additional Insured. All insurance coverage and self-insured retention or deductible portions, except Workers' Compensation insurance and Professional Liability insurance, if applicable, shall name, to the fullest extent permitted by law for claims arising out of the performance of this Contract, the City, its agents, representatives, officers, directors, officials and employees as Additional Insured as specified under the respective coverage sections of this Contract.

4. Coverage Term. All insurance required herein shall be maintained in full force and effect until all Work or Services required to be performed under the terms of this Contract are satisfactorily performed, completed and formally accepted by the City, unless specified otherwise in this Contract.

5. Primary Insurance. Contractor's insurance shall be primary insurance with respect to performance of this Contract and in the protection of the City as an Additional Insured.

6. Claims Made. In the event any insurance policies required by this Agreement are written on a "claims made" basis, coverage shall extend, either by keeping coverage in force or purchasing an extended reporting option, for three years past completion and acceptance of the services. Such continuing coverage shall be evidenced by submission of annual Certificates of Insurance citing applicable coverage is in force and contains the provisions as required herein for the three-year period.

7. Waiver. All policies, except for Professional Liability, including Workers' Compensation insurance, shall contain a waiver of rights of recovery (subrogation) against the City, its agents, representatives, officials, officers and employees for any claims arising out of the Work or Services of Contractor. Contractor shall arrange to have such subrogation waivers incorporated into each policy via formal written endorsement thereto.

8. Policy Deductibles and/or Self-Insured Retentions. The policies set forth in these requirements may provide coverage that contains deductibles or self-insured retention amounts. Such deductibles or self-insured retention shall not be applicable with respect to the policy limits provided to the City. Contractor shall be solely responsible for any such deductible or self-insured retention amount.

9. Use of Subcontractors. If any Work under this Contract is subcontracted in any way, Contractor shall execute written agreement with its Subcontractors containing the indemnification provisions set forth in this Section and insurance requirements set forth herein protecting the City and Contractor. Contractor shall be responsible for executing any agreements with its Subcontractor and obtaining certificates of insurance verifying the insurance requirements.

10. Evidence of Insurance. Prior to commencing any Work or Services under this Contract, Contractor will provide the City with suitable evidence of insurance in the form of certificates of insurance and a copy of the declaration page(s) of the insurance policies as required by this Contract, issued by Contractor's insurance insurer(s) as evidence that policies are placed with acceptable insurers as specified herein and provide the required coverages, conditions and limits of coverage specified in this Contract and that such coverage and provisions are in full force and effect. Confidential information such as the policy premium may be redacted from the declaration page(s) of each insurance policy, provided that such redactions do not alter any of the information required by this Contract. The City shall reasonably rely upon the certificates of insurance and declaration page(s) of the insurance policies as evidence of coverage but such acceptance and reliance shall not waive or alter in any way the insurance requirements or obligations of this Contract. If any of the policies required by this Contract expire during the life of this Contract, it shall be Contractor's responsibility to forward renewal certificates and declaration page(s) to the City 30 days prior to the expiration date. All certificates of insurance and declarations required by this Contract shall be identified by referencing this Contract. A $25.00 administrative fee shall be assessed for all certificates or declarations received without a reference to this

Contract. Additionally, certificates of insurance and declaration page(s) of the insurance policies submitted without referencing this Contract will be subject to rejection and may be returned or discarded. Certificates of insurance and declaration page(s) shall specifically include the following provisions:

a. The City, its agents, representatives, officers, directors, officials and employees are Additional Insureds as follows:

(i) Commercial General Liability - Under Insurance Services Office, Inc., ("ISO") Form CG 20 10 03 97 or equivalent.

(ii) Auto Liability - Under ISO Form CA 20 48 or equivalent.

(iii) Excess Liability - Follow Form to underlying insurance.

b. Contractor's insurance shall be primary insurance and non contributory with respect to performance of the Contract.

c. All policies, except for Professional Liability, including Workers' Compensation, waive rights of recovery (subrogation) against City, its agents, representatives, officers, officials and employees for any claims arising out of Work or Services performed by Contractor under this Contract.

d. ACORD certificate of insurance form 25 (2014/01) is preferred. If ACORD certificate of insurance form 25 (2001/08) is used, the phrases in the cancellation provision "endeavor to" and "but failure to mail such notice shall impose no obligation or liability of any kind upon the company, its agents or representatives" shall be deleted. Certificate forms other than ACORD form shall have similar restrictive language deleted.

B. Required Insurance Coverage.

1. Commercial General Liability. Contractor shall maintain "occurrence" form Commercial General Liability insurance with an unimpaired limit of not less than $1,000,000 for each occurrence, $2,000,000 Products and Completed Operations Annual Aggregate and a $2,000,000 General Aggregate Limit. The policy shall cover liability arising from premises, operations, independent contractors, products-completed operations, personal injury and advertising injury. Coverage under the policy will be at least as broad as ISO policy form CG 00 010 93 or equivalent thereof, including but not limited to, separation of insured's clause. To the fullest extent allowed by law, for claims arising out of the performance of this Contract, the City, its agents, representatives, officers, officials and employees shall be cited as an Additional Insured under ISO, Commercial General Liability Additional Insured Endorsement form CG 20 10 03 97, or equivalent, which shall read "Who is an Insured (Section II) is amended to include as an insured the person or organization shown in the Schedule, but only with respect to liability arising out of "your work" for that insured by or for you." If any Excess insurance is utilized to fulfill the requirements of this subsection, such Excess insurance shall be "follow form" equal or broader in coverage scope than underlying insurance.

2. Vehicle Liability. Contractor shall maintain Business Automobile Liability insurance with a limit of $1,000,000 each occurrence on Contractor's owned, hired and non-owned vehicles assigned to or used in the performance of the Contractor's Work or Services under this Contract. Coverage will be at least as broad as ISO coverage code "1" "any auto" policy form CA 00 01 12 93 or equivalent thereof. To the fullest extent allowed by law, for claims arising out of the performance of this Contract, the City, its agents, representatives, officers, directors, officials and employees shall be cited as an Additional Insured under ISO Business Auto policy Designated Insured Endorsement form CA 20 48

or equivalent. If any Excess insurance is utilized to fulfill the requirements of this subsection, such Excess insurance shall be "follow form" equal or broader in coverage scope than underlying insurance.

3. Professional Liability. If this Contract is the subject of any professional Services or Work, or if the Contractor engages in any professional Services or Work adjunct or residual to performing the Work under this Contract, the Contractor shall maintain Professional Liability insurance covering negligent errors and omissions arising out of the Services performed by the Contractor, or anyone employed by the Contractor, or anyone for whose negligent acts, mistakes, errors and omissions the Contractor is legally liable, with an unimpaired liability insurance limit of $2,000,000 each claim and $2,000,000 annual aggregate.

4. Workers' Compensation Insurance. Contractor shall maintain Workers' Compensation insurance to cover obligations imposed by Federal and State statutes having jurisdiction over Contractor's employees engaged in the performance of Work or Services under this Contract and shall also maintain Employers Liability Insurance of not less than $500,000 for each accident, $500,000 disease for each employee and $1,000,000 disease policy limit.

5. Builder's Risk Insurance. Unless expressly waived by the City Manager in a written addendum or amendment to this Contract, the Contractor shall be responsible for purchasing and maintaining insurance to protect the Project from perils of physical loss. The insurance shall provide for the full cost of replacement for the entire Project at the time of any loss. The insurance shall include as named insureds the City, the Contractor, the Contractor's Subcontractors and subsubcontractors and shall insure against loss from the perils of fire and all-risk coverage for physical loss or damage due to theft, vandalism, collapse, malicious mischief, transit, flood, earthquake, testing, resulting loss arising from defective design, negligent workmanship or defective material. The Contractor shall increase the coverage limits as necessary to reflect changes in the estimated replacement cost.

C. Cancellation and Expiration Notice. Insurance required herein shall not expire, be canceled, or be materially changed without 30 days' prior written notice to the City.

3.11 Performance Bond. The Contractor shall be required to furnish non-revocable security binding the Contractor to provide faithful performance of this Contract in the amount of one hundred percent (100%) of the total Contract Price payable to the City. Performance security shall be in the form of a performance bond, certified check, cashier's check or irrevocable letter of credit. This security must be in the possession of the Contract Administrator within seven days after execution of this Agreement by the City. If the Contractor fails to execute and deliver the security instrument as required, the Contractor may be found in default and the Contract terminated by the City. In case of default the City reserves all rights. All performance bonds shall be executed in the form attached hereto as Exhibit I, duly executed by the Contractor as Principal and having as Surety thereon a Surety company approved by the City and holding a Certificate of Authority to transact surety business in the State of Arizona by the Arizona Department of Insurance. Individual sureties are unacceptable. All Insurers and Sureties shall have, at the time of submission of the performance bond, an A.M. Best's Key Rating Guide of "A-" or better as currently listed in the most recent Best Key Guide, published by the A.M. Best Company.

3.12 Payment Bond. The Contractor shall be required to furnish non-revocable security for the protection of all persons supplying labor and material to the Contractor or any Subcontractor for the performance of any Work related to this Contract. Payment security shall be in the amount of one hundred percent (100%) of the total Contract Price and be payable to the City. Payment security shall be in the form of a payment bond, certified check, cashier's check or irrevocable letter of credit. This security must be in the possession of the Contract Administrator within seven days after execution of this Agreement by the City. If the Contractor fails to execute and deliver the security instrument as required, the Contractor may be found in default and the Contract terminated by the City. In case of default the City reserves all rights. All payment bonds shall be executed in the form attached hereto as Exhibit J, duly executed by the Contractor as Principal and having as Surety thereon a

Surety company approved by the City and holding a Certificate of Authority to transact surety business in the State of Arizona by the Arizona Department of Insurance. Individual sureties are unacceptable. All Insurers and Sureties shall have, at the time of submission of the payment bond, an A.M. Best's Key Rating Guide of "A-" or better as currently listed in the most recent Best Key Guide, published by the A.M. Best Company.

3.13 Changes in the Work. The City may, without invalidating this Contract, order changes in the Work consisting of additions, deletions or other revisions to the Contract and the Contract Price and the Contract Time shall be adjusted as provided below. The Contract Price and/or the Contract Time may only be changed by the City's written approval authorizing said change, and said changes shall be performed under the applicable conditions of the Contract. The Contract Price shall be adjusted as a result of a change in the Work as follows:

A. Additions. When the City increases the scope of the Work, Contractor will perform the increased work pursuant to Contractor's unit prices set forth on the Price Sheet.

B. Deletions. When the City decreases the Work resulting in a decrease in Contractor's quantity of the Work, the City shall be allowed a decrease in the Contract Price amounting to the quantity of the deleted Work multiplied by the Contractor's unit prices.

C. Estimating. Whenever the City is considering a change to the Work, Contractor shall promptly, and in any event within five business days, estimate the price of the contemplated additional or deleted Work in good faith and as accurately as is then-feasible. The estimate shall show quantities of labor, material and equipment and shall be pursuant to the rates set forth in the Contractor's Bid.

3.14 Substantial Completion. When the Contractor considers that the Work is Substantially Complete, the Contract Administrator shall prepare and submit to the Contractor a comprehensive list of Punch List items, which the Contractor may edit and supplement. The Contractor shall proceed promptly to complete and correct Punch List items. Failure to include an item on the Punch List does not alter the responsibility of the Contractor to complete all Work in accordance with the Contract Documents. The City shall determine when the Project and the Contractor's Work is substantially complete. "Substantial Completion" means construction has been completed in accordance with the Contract Documents to the extent that the City can use or occupy the entire Project, or the designated portion of the Project, for the use intended without any outstanding, concurrent construction at the site, except as may be required to complete or correct Punch List items. A prerequisite for Substantial Completion, over and above the extent of construction completion required, is receipt by the City of acceptable documentation that Contractor has successfully tested and demonstrated all systems for their intended use. The date of Substantial Completion shall be confirmed by a Certificate of Substantial Completion signed by the City and Contractor. The Certificate of Substantial Completion signed by the City and Contractor shall state the respective responsibilities of the City and the Contractor for security, maintenance, utilities, damage to the Work and insurance. The Certificate of Substantial Completion shall also include the Punch List as created by the Contractor and modified by the City and establish the time for completion and correction of all Punch List items. If the City and the Contractor cannot agree as to the appropriate date of Substantial Completion, such issue shall be submitted for dispute resolution in accordance with the procedures set forth in Article III, Part B below. Notwithstanding such disagreement, the Contractor shall diligently proceed with completion of the Punch List items.

3.15 Final Completion. The City shall determine when the Project and the Contractor's Work is finally completed. "Final Completion" means completion of the Project by the Contractor in accordance with the Contract Documents, certified to the City by the Contractor. Final Completion shall be achieved only upon the City's written acceptance of (A) the construction, (B) all testing, (C) demonstration by Contractor that the Work functions as required by the Contract Documents and meets all Contract requirements, (D) resolution of all outstanding system deficiencies and Punch List items, if any, (E) delivery of all as-built documentation, drawings, completed record documents (with revisions made after Substantial Completion), annotated submittals and design document deliverables, (F) submittal, acceptance, and delivery of the one hundred percent (100%) complete O&M manuals, (G) delivery of warranties, inspection certificates, bonds and all other required documents, (H) all pre-

requisites for final payment and (I) submittal of Contractor's request for final payment and acceptance enclosing all required documentation. Upon Final Completion the Contract Administrator shall issue a Certificate of Final Completion to the Contractor on behalf of the City. Following receipt of payment from the City, the Contractor shall make all payments due to the Subcontractors.

3.16 Payments to Contractor. Payment shall be conditioned upon Contractor's compliance with the payment terms and conditions set forth below. Material or equipment delivered to the Project by or on behalf of Contractor shall not constitute material or equipment furnished in the performance of the Work until same has been incorporated into the improvements constituting the Project. Payment shall not constitute acceptance by the City or evidence thereof of any Work performed.

A. Progress Payments.

1. On or before the 15th day of each month after construction has commenced, the Contractor shall submit to the City an application for payment consisting of the cost of the Work performed up to the end of the prior month, including the cost of material stored on the site or at other locations approved by the City. The application shall be deemed approved and certified for payment seven days after it is submitted unless before that time the City prepares and issues a specific written finding setting forth those items in detail that are not approved for payment under the Contract. Prior to submission of the next application for payment, the Contractor shall make available at the request of the City a statement accounting for the disbursement of funds received under the previous application for purposes of audit. The extent of such statement shall be as agreed upon between the City and Contractor.

2. Within 14 days after approval of each monthly application for payment, the City shall pay directly to the Contractor the appropriate amount for which application for payment is made, less amounts (a) previously paid by the City, (b) sufficient to pay expenses the City reasonably expects to incur in correcting deficiencies which are set forth in writing and provided to the Contractor and (c) any retainage as set forth in subsection 3.18(B) below.

3. The City's progress payment, occupancy or use of the Project, whether in whole or in part, shall not be deemed as acceptance of any Work not conforming to the requirements of this Contract.

4. Upon Substantial Completion of the Work, the City shall pay the Contractor the unpaid balance of the cost of the Work, less a sum equal to the Contractor's estimated cost of completing any unfinished items as agreed to between the City and the Contractor as to extent and time for Final Completion. The City thereafter shall pay the Contractor monthly the amount retained for unfinished items as each item is completed.

B. Retainage. With respect to the Work, the City shall retain ten percent (10%) of the amount of each estimate until Final Completion and acceptance of all Material, equipment and Work covered by this Contract.

1. Any securities submitted by Contractor in lieu of retainage as may be allowed by law, shall be deposited in an escrow account by the City. The City shall be listed as payee or multiple payees with Contractor on all such securities.

2. When the Work is fifty percent (50%) completed, one-half of the amount retained including any securities substituted pursuant to subsection 3.18 (B)(1) shall be paid to the Contractor upon the Contractor's request, provided the Contractor is making satisfactory progress on the Work and there is no specific cause or claim requiring a greater amount to be retained. After the construction Work is fifty percent (50%) completed, no more than five percent (5%) of the amount of any subsequent progress payments made under this Contract may be retained, provided the Contractor is making satisfactory

progress on the Project. If, at any time, the City determines satisfactory progress is not being made, ten percent (10%) retention shall be reinstated for all progress payments made under this Contract after the determination.

C. Payment for On-site and Off-site Stored Materials. Payment shall be made on account of Materials and equipment delivered and suitably stored at the site for subsequent incorporation in the Work. Payment may similarly be made for Materials and equipment suitably stored off the site, conditioned upon the Contractor furnishing evidence to the City that (1) title to the Materials and equipment will pass to the City upon payment therefore, (2) the Materials and equipment are adequately safeguarded and insured, including during transit from the off-site location to the Project site and (3) such other matters as the City may reasonably request in order to protect its interests. With the prior, written approval of the City, Contractor may advance order the bulk delivery of Materials to be incorporated into the Work over the course of this Contract. Upon delivery and receipt of supplier invoice, the City shall pay for the bulk delivery, either directly to the Contractor or to the vendor or by joint check to Contractor and vendor, and shall receive a full release for the amount paid from vendor and Contractor. Contractor agrees to assume full responsibility for the safekeeping of all such Materials and shall guarantee to the City that such Materials shall remain safe from theft or damage from any and all causes (unless caused by the sole negligence of the City). Contractor shall immediately replace, repair or restore said Materials to their original condition so as to not cause any delay in the Work, and Contractor shall indemnify and hold harmless the City for, from and against any and all loss, cost, liability or expense resulting from any loss or damage to any of the Materials described herein from any cause unless due to the City's sole negligence. Should the City have reason to believe Contractor is not properly safeguarding any of the Materials, the City shall have the right, but not the affirmative duty, to immediately take such steps as it deems necessary to do so, including removing Contractor from the job, replacing any Materials or expending any sums to properly carry out Contractor's responsibility hereunder, and any amounts so expended shall be billed back to Contractor or deducted from any sums then or thereafter due to Contractor. Contractor shall fully insure all Materials stored on site as required by the City, and if such insurance is not obtained due to a lack of insurable interest, the City shall have the right to obtain such insurance and charge the amount thereof back to Contractor or deduct said amount from any funds then or thereafter due to Contractor.

D. Title to Construction Work. The Contractor warrants that title to all Work covered by an application for payment shall pass to the City no later than the time of payment. The Contractor further warrants that upon submittal of an application for payment, all Work for which applications for payment have been previously issued and payments received from the City shall be free and clear of liens, claims, security interests or encumbrances in favor of the Contractor, Subcontractors, material suppliers, or other persons or entities making a claim by reason of having provided labor, Materials and equipment relating to the Work.

E. Final Payment.

1. Final payment, consisting of the unpaid balance of the cost of the Work shall be due and payable at Final Completion and acceptance by the City. Before issuance of final payment, the City may request satisfactory evidence that all payrolls, Materials bills and other indebtedness connected with the Work have been paid or otherwise satisfied.

2. In making final payment the City waives all claims except for:

a. Outstanding liens.

b. Improper workmanship or defective Materials.

c. Work not in conformance with this Contract or Work not completed.

d. Terms of any special warranties required by this Contract.

e. Delivery to City of all warranties, operation and maintenance manuals, "AS-BUILT" record drawings and other documents as required by this Contract.

f. Right to audit Contractor records for a period of three years.

g. Claims previously made in writing and which remain unsettled.

3. Acceptance of final payment by the Contractor shall constitute a waiver of affirmative claims by the Contractor, except those previously made in writing and identified as unsettled at the time of final payment.

F. Warranty. Contractor or its assignee shall give to the City a two-year warranty against deficiencies in material and workmanship for all Work on the Project or other such warranty as required by the City Contract Administrator, which warranty shall begin on the date that the City accepts the Work as provided in this Section. Any material deficiencies in material or workmanship identified by City staff during the two-year warranty period shall be brought to the attention of the Contractor or its assignee that provided the warranty, which shall promptly remedy or cause to be remedied such deficiencies to the reasonable satisfaction of the City Contract Administrator. Continuing material deficiencies in a particular portion of the Work shall be sufficient grounds for the City to require (1) an extension of the warranty for an additional one-year period and (2) the proper repair of or the removal and reinstallation of, that portion of the Work that is subject to such continuing deficiencies. Regardless of whether the applicable warranty period has expired, the Contractor agrees to repair any damage to the Work caused by Contractor's construction activities on the Property. Nothing contained herein shall prevent the City or Contractor from seeking recourse against any other third party for damage to the Work caused by such third party.

3.17 Offset.

A. Offset for Damages. In addition to all other remedies at law or equity, the City may offset from any money due to the Contractor any amounts Contractor owes to the City for damages resulting from breach or deficiencies in performance or breach of any obligation under this Contract.

B. Offset for Delinquent Fees or Taxes. The City may offset from any money due to the Contractor any amounts Contractor owes to the City for delinquent fees, transaction privilege taxes and property taxes, including any interest or penalties.

PART B - PERFORMANCE OF THE WORK

3.18 Work Scheduling. Time is of the essence for this Contract. Contractor shall provide the Contract Administrator with any requested scheduling information and a proposed schedule for performance of the Work within the Contract Time in a form acceptable to the Contract Administrator and approved by the Contract Administrator, in his sole and absolute discretion, providing for commencement and completion of the Work (the "Schedule"). The Schedule shall include the date for Substantial Completion of the Work. The Contract Administrator may revise the Schedule during the course of the Work. Contractor, to induce the City to enter into this Contract, has and does hereby agree to fully perform and complete the Work for the Contract Price within the Schedule.

3.19 Contractor's Representative. The Contractor or his authorized representative shall be present at the Work site at all times during working hours. Instructions and information provided by the Contract Administrator to the Contractor's representative shall be considered as having been given to the Contractor.

3.20 Prosecution of the Work. The Contractor shall prosecute the Work so that the portion of the Work completed at any point in time shall be not less than as required by the Schedule. If the delay is an Inexcusable Delay, as defined below, the Contractor shall prepare a recovery schedule for the Contract Administrator's review

and approval, showing how the Contractor will compensate for the delays and achieve Substantial Completion by the date(s) shown on the Schedule. If the Contractor is unable to demonstrate how it will overcome Inexcusable Delays, the Contract Administrator may order the Contractor to employ such extraordinary measures as are necessary to bring the Work into conformity with the Substantial Completion date(s) set forth therein, the costs of which shall be included as part of the Cost of the Work. If the delay is an Excusable Delay, as defined below, the Contract Administrator shall either (A) authorize an equitable extension in the Schedule to account for such delay, and equitably adjust the contract sum on account of such delay or (B) request that the Contractor prepare a recovery schedule showing how (if possible) the Contractor can achieve Substantial Completion by the applicable date shown on the Schedule, and equitably adjust the Contract Price in accordance with the provisions of this Contract on account of any extraordinary activities required of the Contractor on account of such recovery schedule.

3.21 Extensions of Time.

A. Allowable Extensions. An extension in the scheduled date of Substantial Completion will only be granted in the event of Excusable Delays affecting the Schedule for the Work. The Contractor shall be entitled to general condition costs and extra costs related to the Excusable Delay for idle labor, equipment inefficiency and lost productivity of the performance of the Work. The Contractor must submit evidence reasonably satisfactory to the City substantiating such costs. Such adjustment to the Price and Substantial Completion date shall be issued in a Change Order or Contract amendment, as applicable.

B. Excusable Delay. To the extent any of the following events results in an actual delay in the Work, such shall constitute an "Excusable Delay" (to the extent not set forth below, a delay will be considered an "Inexcusable Delay"):

1. Delays resulting from Force Majeure.

2. Differing, unusual or concealed site conditions that could not reasonably have been anticipated by the Contractor in preparing the Schedule, including, without limitation, archaeological finds and unusual soil conditions (including rock or other geological conditions), underground foundations, abandoned utility lines and water conditions.

3. Delays resulting from the existence or discovery of Hazardous Materials on the Site not brought to the Site by the Contractor.

4. Delays resulting from changes in Applicable Laws occurring after the date of execution of this Contract.

5. Delays occurring due to the acts or omissions of the City and those within the control of the City.

6. Delays occurring due to the acts or omissions of a utility, so long as Contractor has coordinated with the utility causing the delay and the delay occurs despite reasonable steps taken by Contractor to avoid the delay.

7. If adverse and unusually severe weather conditions are the basis for a Claim for additional time, such Claim shall be documented by data substantiating that weather conditions were abnormal for the period of time, could not have been reasonably anticipated and had a direct, actual adverse effect on the scheduled construction. Claims for extensions of time due to unusual or inclement weather, or related muddy or otherwise unworkable site conditions, shall be made in conformance with the requirements of Paragraph 4.3. Claims for time extensions due to unusual weather conditions will be granted only where the unusual weather conditions actually and directly prevented execution of items within the critical path of the Work. Unusual or inclement weather as used herein means weather beyond

that normally expected that results in a minimum of a five (5) hour delay or loss of work for at least 75% of the labor force working on critical path work that day. Claims for rain days must be received by the Owner by 10:00 a.m. of the day that the rain or muddy condition occurs. The appropriate number of rain days shall be shown as single critical path activity with proper duration immediately preceding the Substantial Completion milestone on the critical path project schedule. The duration of this activity will be reduced by the approval rain days encountered. Inclement weather delays, regardless of where they occur during the Work schedule, may warrant extension of contract time but are otherwise non-compensable.

8. Delays resulting from Additional Work (defined below) that cannot be performed concurrently with the Work on the Schedule.

C. Required Notice. In order to obtain an extension of time due to an Excusable Delay, the Contractor shall comply with the following requirements. The Contractor shall notify the Contract Administrator in writing of the Excusable Delay as soon as practicable, but in no event more than seven Days after the Contractor becomes aware of the occurrence of the Excusable Delay. Such notice shall describe the Excusable Delay and shall state the approximate number of Days the Contractor expects to be delayed. After the cessation of the Excusable Delay, the Contractor shall notify the Contract Administrator of the number of Days the Contractor believes that its activities were in fact delayed by the Excusable Delay. In the event that the delay arises as a result of a Change Order request by the City, the request for an extension of time contained in the resulting Change Order proposal shall be deemed sufficient for purposes of this subsection.

D. Determination. Within ten days after cessation of an event giving rise to either an Excusable Delay or Inexcusable Delay, the parties will use good faith efforts to agree on the extent to which the Work has been delayed and whether the delay is an Excusable Delay or an Inexcusable Delay. In the absence of agreement between the parties as to the then-current status of Excusable Delays and Inexcusable Delays, the Contract Administrator will provide the Contractor with written notice of Contract Administrator's determination of the respective number of Days of Excusable Delay and/or Inexcusable Delay. The Contract Administrator's determination may be issued at such time as the Contract Administrator deems reasonable, but not later than ten Days after receipt by the Contract Administrator of the Contractor's written request for such determination. The Contractor shall not, however, deem an issuance by the Contract Administrator of such a determination to be a concurrence of the matters set forth in the Contractor's request. The Contractor may invoke the dispute resolution procedures set forth in Part D below with respect to such determination.

E. Concurrent Delay. To the extent the Contractor is entitled to an extension of time due to an Excusable Delay, but the performance of the Work would have been suspended, delayed or interrupted by the fault or neglect of the Contractor or by an Inexcusable Delay, the Contractor shall not be entitled to any additional costs for the period of such concurrency.

3.22 Liquidated Damages. Contractor further agrees to pay as liquidated damages the sum of five hundred dollars ($500.00) for each consecutive calendar day thereafter, for either Substantial Completion or Final Completion, plus any additional costs incurred by the Owner due to the delay. The Contractor agrees that actual damages would be difficult or impossible to calculate and the above liquidated damage amount is entirely reasonable under the circumstances.

A. Prior to Termination. If the Contract is not terminated, the Contractor shall continue performance and be liable to the City for the liquidated damages until the Work is complete.

B. After Termination. In the event the City exercises its right of termination, the Contractor shall be liable to the City for any excess costs and, in addition, for liquidated damages until such time as the City may reasonably obtain delivery or performance of similar Services.

3.23 Suspension by the City for Convenience.

A. City Determination. The City may order the Contractor in writing to suspend, delay or interrupt all or any part of the Work without cause for such period of time as the City may determine to be appropriate for its convenience.

B. Contract Adjustments. Adjustments caused by suspension, delay or interruption shall be made for increases in the applicable contract sum and/or the date(s) of Substantial Completion. No adjustment shall be made if the Contractor is or otherwise would have been responsible for the suspension, delay or interruption of the Work, or if another provision of this Contract is applied to render an equitable adjustment.

3.24 Termination by the City for Convenience. The City may, upon 30 days' written notice to the Contractor, terminate this Contract, in whole or in part, for the convenience of the City without prejudice to any right or remedy otherwise available to the City. Upon receipt of such notice, the Contractor shall immediately discontinue all Services affected unless such notice directs otherwise. In the event of a termination for convenience of the City, the Contractor's sole and exclusive right and remedy shall be payment for all Work performed through the date of termination. The Contractor shall not be entitled to be paid any amount as profit for unperformed Services or consideration for the City's termination by convenience.

3.25 Termination by the City for Cause.

A. Default; Cure. If the Contractor refuses or fails to supply sufficient properly skilled staff or proper Materials, or disregards laws, ordinances, rules, regulations, or orders of any public authority jurisdiction, or otherwise substantially violates or materially breaches any term or provision of this Contract, and such nonperformance or violation continues without cure for 15 days after the Contractor receives written notice of such nonperformance or violation from the City, then the City may, without prejudice to any right or remedy otherwise available to the City, terminate this Contract.

B. Substitute Performance. Upon termination of this Contract by the City, the City shall be entitled to furnish or have furnished the Services to be performed hereunder by the Contractor by whatever method the City may deem expedient. Also, in such case, the Contractor shall not be entitled to receive any further payment until completion of the Work, and the total compensation to the Contractor under this Contract shall be the amount that is equitable under the circumstances. If the City and the Contractor are unable to agree on the amount to be paid under the foregoing sentence, the City shall fix an amount, if any, that it deems appropriate in consideration of all of the circumstances surrounding such termination, and shall make payment accordingly. The Contractor may dispute the City's assessment of the termination amount pursuant to the dispute resolution process set forth in in Part D of this Contract.

C. Contractor Insolvency. Upon the appointment of a receiver for the Contractor, or if the Contractor makes a general assignment for the benefit of creditors, the City may terminate this Contract, without prejudice to any right or remedy otherwise available to the City, upon giving three business days' written notice to the Contractor. If an order for relief is entered under the bankruptcy code with respect to the Contractor, the City may terminate this Contract by giving three business days' written notice to the Contractor unless the Contractor or the trustee completes all of the following:

1. Promptly cures all breaches within such three-day period.
2. Provides adequate assurances of future performance.
3. Compensates the City for actual pecuniary loss resulting from such breaches.
4. Assumes the obligations of the Contractor within the established time limits.

3.26 Contract Subject to Appropriation. The City is obligated only to pay its obligations set forth in the Agreement as may lawfully be made from funds appropriated and budgeted for that purpose during the

City's then current fiscal year. The City's obligations under this Agreement are current expenses subject to the "budget law" and the unfettered legislative discretion of the City concerning budgeted purposes and appropriation of funds. Should the City elect not to appropriate and budget funds to pay its Agreement obligations, this Agreement shall be deemed terminated at the end of the then-current fiscal year term for which such funds were appropriated and budgeted for such purpose and the City shall be relieved of any subsequent obligation under this Agreement. The parties agree that the City has no obligation or duty of good faith to budget or appropriate the payment of the City's obligations set forth in this Agreement in any budget in any fiscal year other than the fiscal year in which the Agreement is executed and delivered. The City shall be the sole judge and authority in determining the availability of funds for its obligations under this Agreement. The City shall keep Contractor informed as to the availability of funds for this Agreement. The obligation of the City to make any payment pursuant to this Agreement is not a general obligation or indebtedness of the City. Contractor hereby waives any and all rights to bring any claim against the City from or relating in any way to the City's termination of this Agreement pursuant to this section.

3.27 Additional Work, Materials and/or Overtime. Contractor expressly agrees that if overtime or additional workers or materials are necessary to meet the Schedule, that such overtime will be performed or additional workers or materials will be procured by the Contractor, and the additional expense thereof shall be borne by Contractor unless the delay requiring overtime was directly caused by the City, in which event Contractor shall be entitled to compensation for such overtime Work. If the City requests Contractor to perform additional Work in connection with the Project ("Additional Work"), Contractor shall charge the City a negotiated fixed amount for the Additional Work. In the event a fixed amount cannot be negotiated, Contractor shall invoice the City on a time and materials basis for the Additional Work at the unit prices set forth in the price sheet.

3.28 No Damage for Delay or Additional Work by the City. Contractor shall adjust its operations to conform to any progress schedule changes and hereby waives and releases the City from any liability for damages or expenses that may be caused to or sustained by Contractor by reason of such changes or by reason of delays in the Work, whether caused in whole or in part by conduct on the part of the City, including without limitation, any breach of this Contract or delays by other contractors or Subcontractors. Contractor's exclusive remedy in the event of delay or Additional Work by the City shall be an extension of time hereunder to complete the Work.

3.29 Risk of Loss. Contractor shall assume the risk of loss occasioned by fire, theft or other damage to Materials, machinery, apparatus, tools and equipment relating to the Work prior to actual installation in final place on the Project and acceptance by the City. Contractor shall be responsible for damage to the Materials, machinery, apparatus, tools, equipment and property of the City and other contractors resulting from the acts or omissions of its Subcontractors, employees, agents, representatives Subcontractors, and for payment of the full costs of repair or replacement of any said damage.

3.30 Protection of Finished or Partially Finished Work. The Contractor shall properly guard and protect all finished or partially finished Work and shall be responsible for the same until the entire Contract is completed and accepted by the Contract Administrator. The Contractor shall turn over the entire Work in full accordance with this Contract before final settlement shall be made.

3.31 Character and Status of Workers. Only skilled foremen and workers shall be employed on portions of the Work requiring special qualifications. When required by the Contract Administrator, the Contractor shall discharge any person who is, in the opinion of the Contract Administrator, disorderly, dangerous, insubordinate, incompetent or otherwise objectionable. The Contractor shall indemnify and hold harmless the City from and against damages or claims for compensation that may occur in the enforcement of this Section. The Contractor shall be responsible for ensuring the legal working status of its employees and its Subcontractor's employees. The Contractor agrees that once assigned to Work under this Contract, key personnel shall not be removed or replaced without written notice to the City. If key personnel are not available for Work under this Contract for a continuous period exceeding 30 Days, or are expected to devote substantially less effort to the Work

than initially anticipated, the Contractor shall immediately notify the City and shall, subject to the concurrence of the City, replace such personnel with personnel of substantially equal ability and qualifications.

3.32 Work Methods. The methods, equipment and appliances used on the Work shall be such as will produce a satisfactory quality of Work, and shall be adequate to complete the Contract within the Contract Time. Except as is otherwise specified in this Contract, the Contractor's procedure and methods of construction may, in general, be of its own choosing, provided such methods (A) follow best general practice and (B) are calculated to secure results which will satisfy the requirements of this Contract. The Work covered by this Contract shall be carefully laid out in advance and performed in a manner to minimize interference with normal operation and utilization of the City's right-of-way. The Contractor shall exercise caution during the course of this Work to avoid damage to all known existing or possible unknown existing underground utilities. It shall conduct its operations in such a manner as to avoid injury to its personnel and to avoid damage to all utilities. Any damage done will be repaired without delay and at the expense of the Contractor.

3.33 Safety Fencing Requirement for Trenches and Excavations. The Contractor shall provide safety construction fencing around all open trenches and excavations during all non-working hours. In addition, the Contractor shall provide safety fencing around the Project site during working hours in order to ensure public safety. The Contractor shall provide for the safety and welfare of the general public by adequately fencing all excavations and trenches that are permitted by the Contract Administrator to remain open when construction is not in progress. Fencing shall be securely anchored to approved steel posts located not less than six feet on center, having a minimum height of six feet, and shall consist of wire mesh fabric of sufficient weight and rigidity to adequately span a maximum supporting post separation of six feet. The fencing, when installed about the periphery of excavations and trenches, shall form an effective barrier against intrusion by the general public into areas of construction. The Contractor, at all times when construction is not in progress, shall be responsible for maintaining the fencing in good repair, and upon notification by the Contract Administrator, shall take immediate action to rectify any deficiency. Prior to the start of any excavation or trenching required for the execution of the proposed Work, the Contractor shall submit to the Contract Administrator for approval, detailed plans showing types of materials and methods of fabrication for the protective fencing. There will be no separate measurement or payment for furnishing, installing, or maintaining protective fencing. The cost shall be considered incidental to the cost of the pipe, bridge, and any other structures for which trenching is necessary.

3.34 Plans and Shop Drawings, Samples and Substitution of Materials. Contractor shall furnish, within three business days following request therefore by the City, detailed drawings of the Work, samples of Materials and other submittals required for the performance or coordination of the Work. Substitutions shall be equal or superior to Materials specified in the Contract Documents, shall be clearly identified on submittals as "proposed substitutions" and shall be approved by the City in accordance with Section 2.4 above. Contractor shall be fully responsible for the adequacy, completeness and promptness of all such submittals. Materials shall not be furnished to the jobsite unless same is in strict compliance with the Specifications or otherwise approved in writing by the City. Approval by the City shall not relieve Contractor of full responsibility for compliance with scope, intent and performance in accordance with this Contract.

3.35 Outdoor Construction Time Restrictions. Unless otherwise permitted by the Contract Administrator, construction will be restricted as listed in the following table:

May 1 – October 31	November 1 – April 30
5:00 a.m. to 7:00 p.m.	6:00 a.m. to 7:00 p.m.

Construction Work shall not begin Work prior to 7:00 a.m. and shall stop by 5:00 p.m. on Saturdays, Sundays and all City, State and Federal holidays.

3.36 Storage of Materials.

A. Contract Administrator Approval. The Contractor may, if approved by the Contract Administrator, place or stockpile Materials in the public right-of-way provided such Materials do not prevent access to adjacent properties or prevent compliance with traffic regulations.

B. No Traffic Interference. Traffic shall not be required to travel over stockpiled Materials and proper dust control shall be maintained.

3.37 Excess Materials. When excavations are made, resultant loose earth shall be (A) utilized for filling by compacting in place or (B) disposed of off-site. Excess or unsuitable material, broken asphaltic concrete and broken portland cement concrete excavated from the right-of-way shall be removed from the Project Site and disposed of by the Contractor. Disposal of material within the Cottonwood City Limits or Planning Area must be approved by the Contract Administrator. Waste material shall not be placed on private property without express permission of the property owner. The Contractor shall, at all times, keep the premises free from accumulation of waste materials or rubbish caused by its operations. At the completion of the Work, Contractor shall remove all equipment, tools and surplus materials, and shall completely clean the premises, removing and disposing of all debris and rubbish and cleaning all stains, spots, marks, dirt, smears or other blemishes. When the Work premises are turned over to the City, they shall be thoroughly clean and ready for immediate use. Clean-up shall include removal of all excess pointing mortar materials within pipes and removal of oversized rocks and boulders left after finish grading. The Contractor shall provide for the legal disposal of all waste products and debris and shall make necessary arrangements for such disposal.

3.38 Temporary Sanitary Facilities. The Contractor shall provide ample toilet facilities with proper enclosures for the use of workers employed on the Work site. Toilet facilities shall be installed and maintained in conformity with all applicable State and local laws, codes, regulations and ordinances and shall be properly lit and ventilated, and kept clean at all times. Adequate and satisfactory drinking water shall be provided at all times and under no circumstances and under no conditions will the use of common cups be permitted. The Contractor must supply sanitary drinking cups for the benefit of all employees.

3.39 Electric Power, Water and Telephone. Unless otherwise specified, the Contractor shall make its own arrangements for electric power, water and telephone. Subject to the convenience of the utility, it may be permitted to connect to existing facilities where available, but Contractor shall meter and bear the cost of such power or water, and installation and disconnect of such power, water and telephone services.

3.40 Energized Aerial Electrical Power Lines. Utility companies may maintain energized aerial electrical power lines in the immediate vicinity of this Project. Contractor shall not presume any such lines to be insulated. Construction personnel working in proximity to these lines may be exposed to an extreme hazard from electrical shock. Contractor shall ensure that its employees and all other construction personnel working on this Project are warned of the danger and instructed to take adequate protective measures, including maintaining a minimum ten feet of clearance between the lines and all construction equipment and personnel. (see: OSHA Std. 1926.550 (a) 15, as amended). As an additional safety precaution, Contractor shall call the affected utility companies to arrange, if possible, to have these lines de-energized or relocated when the Work reaches their immediate vicinity. The cost of such temporary arrangements shall be borne by the Contractor. Contractor shall account for the time necessary to cause such utility disconnection in the preparation of its Bid. Electrical utility companies may maintain energized underground electrical power lines in the immediate vicinity of this Project. These power lines represent an extreme hazard of electrical shock to any construction personnel or equipment coming in contact with them. Arizona law requires all parties planning excavations in public rights-of-way to contact all utility firms for locations of their underground facilities. Contractor shall ensure that its employees and all other personnel working near any underground power lines must be warned to take adequate protective measure. (see: OSHA Std. 1926-651 (A), as amended).

3.41 Site Clean Up. Contractor shall at all times, but not less than daily unless otherwise agreed by City Representative, keep the premises on which the Work is being performed clean and free from accumulation of

any waste materials, trash, debris and excess dirt, and at all times shall remove Contractor's implements, machinery, tools, apparatus and equipment from the jobsite when not needed on the jobsite. Should the City Representative find it necessary in his/her opinion to employ help to clean up, remove or store any of the foregoing due to failure of Contractor to do so, the expense thereof shall be charged to Contractor. Verbal notice from the City Representative on clean-up or removal is considered adequate notice hereunder, and failure to conform with his/her request within 24 hours thereof will be construed as a breach of this Contract by the Contractor and such charges will be made against Contractor's account as are necessary to accomplish the clean-up or removal. The cost of cleanup, removal or storage by the City, if not deducted by the City from monies due Contractor, shall be paid by Contractor within five business days of written demand by the City.

3.42 Use of the Site. Contractor shall at all times comply fully with all laws, orders, citations, rules, regulations, standards and statutes with respect to occupational health and safety, the handling and storage of hazardous materials, accident prevention and safety equipment and practices, including any accident prevention and safety program of the City; provided, however, that the City shall not be required to impose any safety requirements or administer any such programs and the review or requirement of any safety plan by the City shall not be deemed to release Contractor or in any way diminish its liability, by way of indemnity or otherwise, as assumed by it under this Contract. Contractor shall conduct inspections regularly to determine that safe working conditions and equipment exist and accepts sole responsibility for providing a safe place to Work for its employees and employees of its Subcontractors, laborers, suppliers of material and equipment and any other person visiting the Site, for adequacy of and required use of all safety equipment and for compliance herewith. When so ordered, Contractor shall stop any part of the Work that the City deems unsafe until corrective measures satisfactory to the City have been taken. Should Contractor neglect to adopt such corrective measures, the City may do so and deduct the cost from payments due Contractor. Contractor shall timely submit copies of all accident or injury reports to the City.

3.43 Public Information and Notification. The Contractor shall submit a public information and notification plan for this Project (the "Notification Plan") to the City Representative at the first pre-construction meeting held prior to start of construction. The Notification Plan shall include, at a minimum, the items set forth in this Section; provided, however, that the Contract Administrator may waive any portion of the requirements of this Section upon a written determination that the Project scope does not warrant such notification. Contractor shall provide Project information to affected residents and homeowners' associations prior to and throughout the Project's duration. The Contractor shall use the Notification Plan to inform the local citizens, businesses and City officials, not less than five business days in advance, of (A) necessary operations that create high noise levels, (B) street closures, (C) detour locations, (D) haul routes and material delivery routes and (E) disruption of bus routes, mail routes and other delivery/pick-up routes.

A. Neighborhood Notification. Prior to the start of any Work on the Project, the Contractor shall distribute a preliminary "Dear Neighbor" letter (8-1/2"x11"), as submitted to and subject to the approval of the Contract Administrator, to all businesses, property owners and residents within 600 feet of any portion of this Project. This "Dear Neighbor" letter shall include, at a minimum, the following information:

1. Contractor's name, business telephone number and the 24-hour "Hot Line" telephone number for this Project.

2. Name of Contractor's Project Manager.

3. Name of Contractor's Project Superintendent.

4. Brief description of the Project.

5. Construction schedule, including anticipated Work hours.

6. Anticipated lane restrictions, including the expected duration thereof.

7. Name of City's Project Manager.

8. Name of the Contract Administrator.

The Contract Administrator shall provide the Contractor with a distribution list for this "Dear Neighbor" letter. Contractor shall (1) ensure that the letter is distributed to all persons and businesses indicated on the list provided by the Contract Administrator and (2) provide the Contract Administrator with a copy of the letter sent and sufficient proof of mailing. Subsequent to delivery of the "Dear Neighbor" letter, the Contractor shall distribute bi-monthly construction progress updates, including construction schedule and any additional information the Contract Administrator deems important as a result of construction activities, to all persons and businesses included on the aforementioned distribution list. At the request of the Contract Administrator, Contractor may be required to distribute additional public notifications. At the end of construction a final "Dear Neighbor" letter shall be distributed to the persons and businesses on the aforementioned distribution list highlighting the Contractor's and the City's appreciation for their patience during construction of the Project.

PART C - MISCELLANEOUS

3.44 Applicable Law; Venue. This Contract shall be governed by the laws of the State of Arizona and suit pertaining to this Contract may be brought only in courts in Yavapai County, Arizona.

3.45 Conflict of Interest. This Contract is subject to the provisions of ARIZ. REV. STAT. § 38-511. The City may cancel this Contract without penalty or further obligations by the City or any of its departments or agencies if any person significantly involved in initiating, negotiating, securing, drafting or creating this Contract on behalf of the City or any of its departments or agencies is, at any time while the Contract or any extension of the Contract is in effect, an employee of any other party to the Contract in any capacity or a consultant to any other party of the Contract with respect to the subject matter of the Contract.

3.46 Contract Amendments. This Contract may be modified only by a written amendment signed by persons duly authorized to enter into contracts on behalf of the City and the Contractor; provided, however, that Change Orders may be issued and approved administratively by the City when such changes do not alter the Contract Price.

3.47 Provisions Required by Law. Each and every provision of law and any clause required by law to be in the Contract will be read and enforced as though it were included herein and, if through mistake or otherwise any such provision is not inserted, or is not correctly inserted, then upon the application of either party, the Contract will promptly be physically amended to make such insertion or correction.

3.48 Severability. The provisions of this Contract are severable to the extent that any provision or application held to be invalid by a Court of competent jurisdiction shall not affect any other provision or application of the Contract which may remain in effect without the invalid provision or application.

3.49 Independent Contractor. It is clearly understood that each party will act in its individual capacity and not as an agent, employee, partner, joint venturer, or associate of the other. An employee or agent of one party shall not be deemed or construed to be the employee or agent of the other for any purpose whatsoever. The Contractor acknowledges and agrees that the Services provided under this Agreement are being provided as an independent contractor, not as an employee or agent of the City. Contractor, its employees and subcontractors are not entitled to workers' compensation benefits from the City. The City does not have the authority to supervise or control the actual work of Contractor, its employees or subcontractors. The Contractor, and not the City, shall determine the time of its performance of the services provided under this Agreement so long as Contractor meets the requirements of its agreed scope of work and the specifications, plans/construction drawings as set forth in Exhibit A. Contractor is neither prohibited from entering into other contracts nor prohibited from practicing its profession elsewhere. City and Contractor do not intend to nor will they combine business operations under this Agreement.

3.50 Entire Agreement; Interpretation-Parol Evidence. This Contract represents the entire agreement of the parties with respect to its subject matter, and all previous agreements, whether oral or written, entered into prior to this Contract are hereby revoked and superseded by this Contract. No representations, warranties, inducements or oral agreements have been made by any of the parties except as expressly set forth herein, or in any other contemporaneous written agreement executed for the purposes of carrying out the provisions of this Contract. This Contract shall be construed and interpreted according to its plain meaning, and no presumption shall be deemed to apply in favor of, or against the party drafting the Contract. The parties acknowledge and agree that each has had the opportunity to seek and utilize legal counsel in the drafting of, review of, and entry into this Contract.

3.51 Assignment; Delegation. No right or interest in this Contract shall be assigned or delegated by Contractor without prior, written permission of the City, signed by the City Manager. Any attempted assignment or delegation by Contractor in violation of this provision shall be a breach of this Contract by Contractor.

3.52 Subcontracts. No subcontract shall be entered into by the Contractor with any other party to furnish any of the Materials, Services or construction specified herein without the prior, written approval of the City. The Contractor is responsible for performance under this Contract whether or not Subcontractors are used.

3.53 Rights and Remedies. No provision in this Contract shall be construed, expressly or by implication, as waiver by the City of any existing or future right and/or remedy available by law in the event of any claim of default or breach of this Contract. The failure of the City to insist upon the strict performance of any term or condition of this Contract or to exercise or delay the exercise of any right or remedy provided in this Contract, or by law, or the City's acceptance of and payment for Materials or Services, shall not release the Contractor from any responsibilities or obligations imposed by this Contract or by law, and shall not be deemed a waiver of any right of the City to insist upon the strict performance of this Contract.

3.54 Attorneys' Fees. In the event either party brings any action for any relief, declaratory or otherwise, arising out of this Contract or on account of any breach or default hereof, the prevailing party shall be entitled to receive from the other party reasonable attorneys' fees and reasonable costs and expenses, determined by the court sitting without a jury, which shall be deemed to have accrued on the commencement of such action and shall be enforced whether or not such action is prosecuted through judgment.

3.55 Notices and Requests. Any notice or other communication required or permitted to be given under this Contract shall be in writing and shall be deemed to have been duly given if (A) delivered to the party at the address set forth below, (B) deposited in the U.S. Mail, registered or certified, return receipt requested, to the address set forth below or (C) given to a recognized and reputable overnight delivery service, to the address set forth below:

If to the City: City of Cottonwood
816 N. Main Street
Cottonwood, Arizona 86326
Attn: Purchasing Agent

With copy to: City of Cottonwood
824 N. Main Street
Cottonwood, Arizona 86326
Attn: City Clerk

If to Contractor: _____
_____
_____
Attn: _____

or at such other address, and to the attention of such other person or officer, as any party may designate in writing by notice duly given pursuant to this Section. Notices shall be deemed received (A) when delivered to the party, (B) three business days after being placed in the U.S. Mail, properly addressed, with sufficient postage or (C) the following business day after being given to a recognized overnight delivery service, with the person giving the notice paying all required charges and instructing the delivery service to deliver on the following business day. If a copy of a notice is also given to a party's counsel or other recipient, the provisions above governing the date on which a notice is deemed to have been received by a party shall mean and refer to the date on which the party, and not its counsel or other recipient to which a copy of the notice may be sent, is deemed to have received the notice.

3.56 Overcharges by Antitrust Violations. The City maintains that, in practice, overcharges resulting from antitrust violations are borne by the purchaser. Therefore, to the extent permitted by law, the Contractor hereby assigns to the City any and all claims for such overcharges as to the goods and services used to fulfill the Contract.

3.57 Force Majeure. Except for payment for sums due, neither party shall be liable to the other nor deemed in default under this Contract if and to the extent that such party's performance of this Contract is prevented by reason of force majeure. The term *"force majeure"* means an occurrence that is beyond the control of the party affected and occurs without its fault or negligence. Without limiting the foregoing, force majeure includes acts of God; acts of the public enemy; war; riots; strikes; mobilization; labor disputes; civil disorders; fire; floods; lockouts, injunctions-intervention-acts, or failures or refusals to act by government authority; and other similar occurrences beyond the control of the party declaring force majeure which such party is unable to prevent by exercising reasonable diligence. The force majeure shall be deemed to commence when the party declaring force majeure notifies the other party, in accordance with Section 3.65, of the existence of the force majeure and shall be deemed to continue as long as the results or effects of the force majeure prevent the party from resuming performance in accordance with this Contract. Force majeure shall not include the following occurrences:

A. Late Delivery. Late delivery of equipment or materials caused by congestion at a manufacturer's plant or elsewhere, an oversold condition of the market, inefficiencies or similar occurrences.

B. Late Performance. Late performance by a Subcontractor unless the delay arises out of a force majeure occurrence in accordance with this Section 3.62.

Any delay or failure in performance by either party hereto shall not constitute default hereunder or give rise to any claim for damages or loss of anticipated profits if, and to the extent that such delay or failure is caused by force majeure. If either party is delayed at any time in the progress of the Work by force majeure, then the delayed party shall notify the other party in accordance with Section 3.65 and shall make a specific reference to this Section, thereby invoking its provisions. The delayed party shall cause such delay to cease as soon as practicable and shall notify the other party in writing. The time of Substantial Completion or Final Completion shall be extended by written Contract amendment for a period of time equal to the time that the results or effects of such delay prevent the delayed party from performing in accordance with this Contract.

3.58 Confidentiality of Records. The Contractor shall establish and maintain procedures and controls that are acceptable to the City for the purpose of ensuring that information contained in its records or obtained from the City or from others in carrying out its obligations under this Contract shall not be used or disclosed by it, its agents, officers, or employees, except as required to perform Contractor's duties under this Contract. Persons requesting such information should be referred to the City. Contractor also agrees that any information pertaining to individual persons shall not be divulged other than to employees or officers of Contractor as needed for the performance of duties under this Contract.

3.59 Records and Audit Rights. To ensure that the Contractor and its Subcontractors are complying with the warranty under Section 3.62 below, Contractor's and its Subcontractors' books, records, correspondence, accounting procedures and practices, and any other supporting evidence relating to this

Contract, including the papers of any Contractor and its Subcontractors' employees who perform any Work or Services pursuant to this Contract (all of the foregoing hereinafter referred to as "Records"), shall be open to inspection and subject to audit and/or reproduction during normal working hours by the City, to the extent necessary to adequately permit (1) evaluation and verification of any invoices, payments or claims based on Contractor's and its Subcontractors' actual costs (including direct and indirect costs and overhead allocations) incurred, or units expended directly in the performance of Work under this Contract and (2) evaluation of the Contractor's and its Subcontractors' compliance with the Arizona employer sanctions laws referenced in Section 3.70 below. To the extent necessary for the City to audit Records as set forth in this Section, Contractor and its Subcontractors hereby waive any rights to keep such Records confidential. For the purpose of evaluating or verifying such actual or claimed costs or units expended, the City shall have access to said Records, even if located at its Subcontractors' facilities, from the effective date of this Contract for the duration of the Work and until three years after the date of final payment by the City to Contractor pursuant to this Contract. Contractor and its Subcontractors shall provide the City with adequate and appropriate workspace so that the City can conduct audits in compliance with the provisions of this Section. The City shall give Contractor or its Subcontractors reasonable advance notice of intended audits. Contractor shall require its Subcontractors to comply with the provisions of this Section by insertion of the requirements hereof in any subcontract pursuant to this Contract.

3.60 E-verify Requirements. To the extent applicable under ARIZ. REV. STAT. § 41-4401, the Contractor and its Subcontractors warrant compliance with all Federal immigration laws and regulations that relate to their employees and their compliance with the E-verify requirements under ARIZ. REV. STAT.§ 23-214(A). Contractor's or its Subcontractors' failure to comply with such warranty shall be deemed a material breach of this Contract and may result in the termination of this Contract by the City.

3.61 Right to Inspect Plant. The City may, at reasonable times, inspect the part of the plant or place of business of the Contractor or Subcontractor that is related to the performance of this Contract.

3.62 Warranties. Contractor warrants to the City that all Materials and equipment furnished shall be new unless otherwise specified and agreed by the City and that all Work shall be of first class quality, free from faults and defects and in conformance with the Contract. If at any time within one year following the date of Final Completion and acceptance of the entire Project (or such longer period as may be provided under warranties for equipment or Materials): (A) any part of the Materials furnished in connection with the Work shall be or become defective due to defects in either labor or Materials, or both, or (B) Contractor's Work or Materials, or both, are or were not in conformance with original or amended Plans and Specifications, or supplementary shop drawings, then the Contractor shall upon written notice from the City immediately replace or repair such defective or non-conforming Material or workmanship at no cost to the City. Contractor further agrees to execute any special guarantees as provided by the Contract or required by law. Contractor shall require similar guarantees from all vendors and from all its Subcontractors. Contractor further agrees, upon written demand of the City and during the course of construction, to immediately re-execute, repair or replace any Work that fails to conform to the requirements of the Contract, whether caused by faulty Materials or workmanship, or both. In the event Contractor shall fail or refuse to make such change upon the City's written demand, the City shall have the right to have such Work re-executed, repaired or replaced, to withhold from or back charge to Contractor all costs incurred thereby.

3.63 Inspection. All Materials and/or Services are subject to final inspection and acceptance by the City. Materials and/or Services failing to conform to the Specifications of this Contract will be held at Contractor's risk and may be returned to the Contractor. If so returned, all costs are the responsibility of the Contractor. Upon discovery of non-conforming Materials or Services, the City may elect to do any or all of the following by written notice to the Contractor: (A) waive the non-conformance; (B) stop the Work immediately; or (C) bring material or service into compliance and withhold the cost of same from any payments due to the Contractor.

3.64 No Replacement of Defective Tender. Every tender of Materials shall fully comply with all provisions of the Contract. If a tender is made which does not fully conform, this shall constitute a breach of the Contract as a whole.

3.65 Shipment Under Reservation Prohibited. Contractor is not authorized to ship Materials under reservation and no tender of a bill of lading will operate as a tender of the Materials.

3.66 Liens. All Materials, Service or construction shall be free of all liens and, if the City requests, a formal release of all liens shall be delivered to the City.

3.67 Licenses. Contractor shall maintain in current status all Federal, State and Local licenses and permits required for the operation of the business conducted by the Contractor as applicable to this Contract.

3.68 Patents and Copyrights. All Services, information, computer program elements, reports and other deliverables, which may be patented or copyrighted and created under this Contract are the property of the City and shall not be used or released by the Contractor or any other person except with the prior written permission of the City.

3.69 Preparation of Specifications by Persons other than City Personnel. All Specifications shall seek to promote overall economy for the purposes intended and encourage competition and not be unduly restrictive in satisfying the City's needs. No person preparing Specifications shall receive any direct or indirect benefit from the utilization of Specifications, other than fees paid for the preparation of Specifications.

3.70 Advertising. Contractor shall not advertise or publish information concerning this Contract without prior, written consent of the City.

EXHIBIT A
TO
INVITATION FOR BIDS NO. 2016-PW-02

[Specifications, Plans/Construction Drawings]

See PDF Documents Included in Bid Package

EXHIBIT B
TO
INVITATION FOR BIDS NO. 2016-PW-02

[Substitution/Equal Request Form]

See following pages.

SUBSTITUTION/EQUAL REQUEST FORM

Park Restroom Facilities Remodel (2) & New Construction (2)
2016-PW-02

Bidder _____ hereby submits for City's consideration the following product, instead of the specified item, for the above Project.

Section	Page	Paragraph/Line	Specified Item
_____	_____	_____	_____

Proposed Substitution: _____

_____

(NOTE: See Article II – Bid Process; Bid Award, Section 2.4(C), Approval of Substitutions, or Section 2.4(D), Use of Equals, as applicable, for additional criteria concerning prior approval for substitutions or use equals of material and equipment.)

Attach complete product description, drawings, photographs, performance and test data, and other information necessary for evaluation, indicating by highlighting all comparable data between specified item and proposed substitution or equal. Identify specific model numbers, finishes, options, etc.

A. Will changes be required to Project design (architecturally, structurally, mechanically or electrically) in order to properly install proposed substitution? Yes _____ No _____. If Yes, explain:

_____

_____

B. Will the undersigned pay for changes to the Project design, including engineering and drawing costs, caused by requested substitution? Yes _____ No _____

C. List differences between proposed substitution and specified item.

Specified Item	Proposed Substitution
_____	_____
_____	_____

D. Does substitution affect Drawing dimensions? Yes _____ No _____ If Yes, explain:

_____

_____

E. What effect does substitution have on other trades? _____

_____

F. Does manufacturer's warranty of proposed substitution differ from that specified?
Yes _____ No _____. If Yes, explain: _____

_____

G. Will substitution affect progress schedule? Yes _____ No _____. If Yes, explain:

_____

_____

H. Will substitution require more license fees or royalties than specified product?
Yes _____ No _____. If Yes, explain: _____

_____

I. Will maintenance and service parts be locally available for substitution?
Yes _____ No _____. If Yes, explain: _____

_____

J. Will substitution be compatible with all adjacent material and/or applications to or on the proposed substitution? Yes _____ No _____. If no, explain what material substitutions will be required to make your proposed substitution compatible: _____

_____

List materials that will be required to provide compatibility:_____

_____

The undersigned hereby assumes all responsibility for all provisions indicated herein and agrees that, if adequate comparable information is not provided as required by Section 2.4(C), Approval of Substitutions, or Section 2.4(D), Use of Equals, as applicable, and this Form, the proposed substitution or equal shall be subject to rejection.

The undersigned understands and agrees that the substitution requested, including all supporting data, must be submitted to and be in the possession of the City ten (10) full calendar Days prior to the Bid Deadline, to be considered, including all supporting data for the substitution. Telegraphic (facsimile) or electronic (email) copies will not be considered.

Submitted by:

_____
Signature

_____
Print Name

_____
Title

_____
Company Name

_____
Address

_____
City, State, Zip Code

_____
Date Telephone No.

For City's Use Only:

Accepted: _____

Accepted: _____

By: _____ Date: _____

Remarks: _____

_____

_____

EXHIBIT C
TO
INVITATION FOR BIDS NO. 2016-PW-02

[Price Sheet]

See following pages.

City of Cottonwood
Park Restroom Facilities Remodel (2) & New Construction (2)
2016-PW-02 Addendum #1
July 1st, 2016

REVISED PRICE SHEET
Addenda to add allowances for electrical

Park Restroom Facilities Remodel (2) & New Construction (2)
2016-PW-02

NOTE: All pricing blanks must be filled in. Empty or unfilled spaces in the Bid Price Sheet shall result in a determination that a Bid is non-responsive.

Item No.	Description of Materials and/or Services	Qty	Unit	Total Price
1	New Construction of Cottonwood Kids Park Restroom Facility	1	EA	$287,900.00
2	New Construction of Garrison Park Restroom Facility	1	EA	$191,900.00
3	Remodel of Riverfront Park Restroom Facility	1	EA	$94,800.00
4	Remodel of Existing Garrison Park Restroom Facility	1	EA	$59,700.00
	TOTAL CONSTRUCTION COST*			$634,300.00
	Electrical Allowance for Kids Park			$2,500.00
	Electrical Allowance for Garrison Park			$4,000.00

*** ALL BIDS ARE PRESUMED TO INCLUDE ALL APPLICABLE TAXES. CONTRACTOR IS RESPONSIBLE FOR ENSURING THAT ALL WORK CONTEMPLATED BY THE PLANS FOR THE PROJECT IS BID ON THE PRICE SHEET. THE CITY RESERVES THE RIGHT TO AWARD ANY OR ALL OF THE ITEM NUMBERS LISTED ABOVE AS THE CONTRACT.**

EXHIBIT D
TO
INVITATION FOR BIDS NO. 2016-PW-02

[Federal Requirements]

See following page.

Not applicable to this Project.

EXHIBIT E
TO
INVITATION FOR BIDS NO. 2016-PW-02

[Licenses; DBE/WBE Status]

See following page.

LICENSES; DBE/WBE STATUS

Park Restroom Facilities Remodel (2) & New Construction (2)
2016-PW-02

☑ **Attach a copy of your Contractor's License to your bid submittal.**

☑ **Attach a copy of your Business License to your bid submittal.**

* Business License must be either a City of Cottonwood Privilege Tax Business License or an Arizona Transaction Tax (sales) Privilege Tax License

Has your firm been certified by any jurisdiction in Arizona as a minority or woman owned business enterprise? Yes_____, No___✓___.

If yes, please provide details and documentation of the certification.

STATE OF ARIZONA

Office of the Registrar of Contractors

License No. 145666

This is to Certify That

KINNEY CONSTRUCTION SERVICES INC (CORP.)

having been shown to possess all the necessary qualifications, and having complied with all the requirements of the law, is by order of the Registrar of Contractors on the 4TH *day of* JUNE *in the year* ONE THOUSAND NINE HUNDRED AND NINETY NINE, *duly licensed and admitted to engage in and pursue the business of*

B-01
GENERAL COMMERCIAL CONTRACTOR

Contractor in the State of Arizona. Given under my hand and the seal of the Registrar of Contractors in my office, City of Phoenix, this 4TH *day of* JUNE, 1999.

Arizona Registrar of Contractors • 1931 •

DIRECTOR

STATE OF ARIZONA

Office of the

License No. ROC206588

Registrar of Contractors

This is to Certify That

KINNEY CONSTRUCTION SERVICES INC (CORP.)

having been shown to possess all the necessary qualifications, and having complied with all the requirements of the law, is by order of the Registrar of Contractors duly licensed and admitted to engage in and pursue the business of

KA-
DUAL ENGINEERING

Contractor in the State of Arizona. Given under my hand and the seal of the Registrar of Contractors in my office, City of Phoenix, this 18TH *day of* MAY, 2005.

Arizona Registrar of Contractors
1931

DIRECTOR

City of Flagstaff

Transaction Privilege (Sales) Tax License

License #: 8021855502

Effective Date: 03/26/07

Expiration Date:

Name: KINNEY CONSTRUCTION SERVICES INC

DBA: KINNEY CONSTRUCTION SERVICES INC
121 E Birch Ave Ste 500
Flagstaff , AZ 86001-4621

The person or company and address listed above is hereby licensed to conduct business upon condition that any tax accruing to the City of Flagstaff shall be paid as required by the City Code.

Ranbir Cheema - Sales Tax Manager

POST THIS LICENSE IN A CONSPICUOUS PLACE AT ALL TIMES
NON-TRANSFERABLE

ARIZONA DEPARTMENT OF REVENUE
LICENSE & REGISTRATION SECTION
1600 WEST MONROE
PHOENIX, ARIZONA 85007-2650

MUST BE DISPLAYED IN A CONSPICUOUS PLACE.

TRANSACTION PRIVILEGE TAX LICENSE

-NOT TRANSFERABLE-

THIS LICENSE IS ISSUED TO THE BUSINESS NAMED BELOW FOR THE ADDRESS SHOWN. LICENSES, BY LAW, MAY NOT BE TRANSFERRED FROM ONE PERSON TO ANOTHER NOR CAN THEY BE TRANSFERRED FROM ONE LOCATION TO ANOTHER. ARIZONA LAW REQUIRES LICENSEES TO NOTIFY THE DEPARTMENT OF REVENUE IF THERE IS A CHANGE IN BUSINESS NAME, TRADE NAME, LOCATION, MAILING ADDRESS OR OWNERSHIP. IN ADDITION, WHEN BUSINESS IS DISCONTINUED OR BUSINESS LOCATION CHANGES AND A NEW LICENSE IS ISSUED, THIS LICENSE MUST BE RETURNED TO THE ARIZONA DEPARTMENT OF REVENUE.

THE LICENSEE LISTED BELOW IS LICENSED TO CONDUCT BUSINESS UPON THE CONDITION THAT TAXES ARE PAID TO THE ARIZONA DEPARTMENT OF REVENUE AS ACCRUED UNDER PROVISIONS OF ARS TITLE 42, CHAPTER 8, ARTICLE 1.

ISSUED TO

KINNEY CONST SVC INC
PO BOX 23438
FLAGSTAFF, AZ 86002

03-028153-W

ALL communications and Reports MUST REFER to this LICENSE NO.

15 BUSINESS CODE

05/01/99 EFFECTIVE DATE

(DBA) KINNEY CONST SVC INC
3825 MADERA RANCH RD
FLAGSTAFF, AZ 86002

04/30/99 PRINT DATE

DOR 87026 (1/88)

EXHIBIT F
TO
INVITATION FOR BIDS NO. 2016-PW-02

[References]

See following pages.

REFERENCES

Park Restroom Facilities Remodel (2) & New Construction (2)
2016-PW-02

Provide the following information for three clients for whom Bidder has successfully completed similar projects as set forth in Section 2.15 within the past 60 months. Failure to provide three accurate and suitable references will result in disqualification. Bidder may also attach another sheet with additional references.

1. Company: Northern Arizona University (NAU)
   Address: S. San Francisco Street
   City/State/Zip Code: Flagstaff, Arizona 86001
   Contact: Mr. Rich Bowen, Associate Vice President, NAU
   Telephone Number: (928) 220.1635 (P)
   Date of Contract Initiation: October 2012 (Design-Phase Start)
   Date of Contract Expiration: August 2013 (Substantial Completion)
   Final Project Cost: $4.98M
   Project Description: Dining Hall Expansion Phase II: 10,096 SF addition and 2,000 SF of renovations to the existing Hot Spot including expanded, second-floor dining space.

2. Company: Xanterra Parks & Resorts, Inc.
   Address: 233 N. Grand Canyon Blvd.
   City/State/Zip Code: Williams, AZ 86046
   Contact: Mr. Paul Davila, Project Manager, Grand Canyon Railway Hotel, LLC
   Telephone Number: (928) 606.8224 (P)
   Date of Contract Initiation: January 2016
   Date of Contract Expiration: March 2016
   Final Project Cost: $275K
   Project Description: Grand Canyon Railway Hotel Renovation: Scope included renovation of 94 guest rooms including tile, carpet, paint, plumbing fixtures, and carpet; all work completed safely in an occupied facility.

3. Company: City of Cottonwood
   Address: 827 N. Main Street
   City/State/Zip Code: Cottonwood, Arizona 86326
   Contact: Mr. David Hausaman
   Telephone Number: (928) 634-8033 x15
   Date of Contract Initiation: August 2013
   Date of Contract Expiration: February 2014
   Final Project Cost: $220K
   Project Description: Yavapai College Reclaimed Waterline: KCS installed approximately 6,000 LF of six-inch PVC reclaimed water line; 500 LF of six-inch ductile iron piping; nine air release valves; and tied into the City of Cottonwood's reclaimed water system.

EXHIBIT G
TO
INVITATION FOR BIDS NO. 2016-PW-02

[Bid Bond]

See following page.

BID BOND

Park Restroom Facilities Remodel (2) & New Construction (2)
2016-PW-02

KNOW ALL PERSONS BY THESE PRESENTS:

THAT, Kinney Construction Services Inc (hereinafter called Principal), as Principal, and Travelers Casuatly and Surety Company of America, a corporation organized and existing under the laws of the State of Connecticut with its principal office in the City of Hartford, (hereinafter called the Surety), as Surety, are held and firmly bound unto the City of Cottonwood, (hereinafter called the Obligee) in the penal sum of Ten Percent (10%) of Bid Amount, Ten Percent of Amount Bid (Dollars) ($10% of Amount Bid lawful money of the United States of America, to be paid to the order of the City of Cottonwood, for the payment whereof, the said Principal and Surety bind themselves, and their heirs, administrators, executors, successors and assigns, jointly and severally, firmly by these presents and in conformance with A.R.S. Section 34-201.

WHEREAS, the Principal has submitted a bid/proposal for: Park Restroom Facilities Remodel (2) & New Construction (2)

NOW, THEREFORE, if the Obligee accepts the proposal of the Principal and the Principal enters into a Contract with the Obligee in accordance with the terms of the proposal and gives the Bonds and Certificates of Insurance as specified in the Standard Specifications with good and sufficient surety for the faithful performance of the Contract and for the prompt payment of labor and materials furnished in the prosecution of the Contract, or in the event of the failure of the Principal to enter into the Contract and give the Bonds and Certificates of Insurance, if the Principal pays to the Obligee the difference not to exceed the penalty of the Bond between the amount specified in the proposal and such larger amount for which the Obligee may in good faith contract with another party to perform the Work covered by the proposal then this obligation is void. Otherwise it remains in full force and effect provided, however, that this Bond is executed pursuant to the provisions of Section 34-201, Arizona Revised Statutes, and all liabilities on this Bond shall be determined in accordance with the provisions of the section to the extent as if it were copied at length herein.

The prevailing party in a suit on this bond shall recover as part of the judgment reasonable attorney fees that may be fixed by a judge of the Court.

Witness our hands this 8th day of July 20 16.

Kinney Construction Services Inc
Principal Seal

By: President

Travelers Casualty and Surety Company of America
Surety Seal

By: Jennifer Castillo, Attorney-in-fact

Constructors Bonding, Inc
Agency of Record

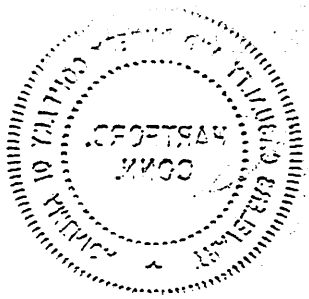

WARNING: THIS POWER OF ATTORNEY IS INVALID WITHOUT THE RED BORDER

TRAVELERS

POWER OF ATTORNEY

Farmington Casualty Company
Fidelity and Guaranty Insurance Company
Fidelity and Guaranty Insurance Underwriters, Inc.
St. Paul Fire and Marine Insurance Company
St. Paul Guardian Insurance Company
St. Paul Mercury Insurance Company
Travelers Casualty and Surety Company
Travelers Casualty and Surety Company of America
United States Fidelity and Guaranty Company

Attorney-In Fact No. 229398 **Certificate No.** 006614671

KNOW ALL MEN BY THESE PRESENTS: That Farmington Casualty Company, St. Paul Fire and Marine Insurance Company, St. Paul Guardian Insurance Company, St. Paul Mercury Insurance Company, Travelers Casualty and Surety Company, Travelers Casualty and Surety Company of America, and United States Fidelity and Guaranty Company are corporations duly organized under the laws of the State of Connecticut, that Fidelity and Guaranty Insurance Company is a corporation duly organized under the laws of the State of Iowa, and that Fidelity and Guaranty Insurance Underwriters, Inc., is a corporation duly organized under the laws of the State of Wisconsin (herein collectively called the "Companies"), and that the Companies do hereby make, constitute and appoint

David J. McKee, Patrick R. Hedges, Joseph A. Clarken III, Jennifer Castillo, and Melanie Ankeney

of the City of Scottsdale, State of Arizona, their true and lawful Attorney(s)-in-Fact, each in their separate capacity if more than one is named above, to sign, execute, seal and acknowledge any and all bonds, recognizances, conditional undertakings and other writings obligatory in the nature thereof on behalf of the Companies in their business of guaranteeing the fidelity of persons, guaranteeing the performance of contracts and executing or guaranteeing bonds and undertakings required or permitted in any actions or proceedings allowed by law.

IN WITNESS WHEREOF, the Companies have caused this instrument to be signed and their corporate seals to be hereto affixed, this 1st day of December, 2015.

Farmington Casualty Company
Fidelity and Guaranty Insurance Company
Fidelity and Guaranty Insurance Underwriters, Inc.
St. Paul Fire and Marine Insurance Company
St. Paul Guardian Insurance Company
St. Paul Mercury Insurance Company
Travelers Casualty and Surety Company
Travelers Casualty and Surety Company of America
United States Fidelity and Guaranty Company

WARNING THIS POWER OF ATTORNEY IS INVALID WITHOUT THE RED BORDER

State of Connecticut
City of Hartford ss.

By: _____
Robert L. Raney, Senior Vice President

On this the 1st day of December, 2015, before me personally appeared Robert L. Raney, who acknowledged himself to be the Senior Vice President of Farmington Casualty Company, Fidelity and Guaranty Insurance Company, Fidelity and Guaranty Insurance Underwriters, Inc., St. Paul Fire and Marine Insurance Company, St. Paul Guardian Insurance Company, St. Paul Mercury Insurance Company, Travelers Casualty and Surety Company, Travelers Casualty and Surety Company of America, and United States Fidelity and Guaranty Company, and that he, as such, being authorized so to do, executed the foregoing instrument for the purposes therein contained by signing on behalf of the corporations by himself as a duly authorized officer.

In Witness Whereof, I hereunto set my hand and official seal.
My Commission expires the 30th day of June, 2016.

MARIE C. TETREAULT NOTARY PUBLIC CONNECTICUT

Marie C. Tetreault
Marie C. Tetreault, Notary Public

58440-8-12 Printed in U.S.A.

WARNING: THIS POWER OF ATTORNEY IS INVALID WITHOUT THE RED BORDER

This Power of Attorney is granted under and by the authority of the following resolutions adopted by the Boards of Directors of Farmington Casualty Company, Fidelity and Guaranty Insurance Company, Fidelity and Guaranty Insurance Underwriters, Inc., St. Paul Fire and Marine Insurance Company, St. Paul Guardian Insurance Company, St. Paul Mercury Insurance Company, Travelers Casualty and Surety Company, Travelers Casualty and Surety Company of America, and United States Fidelity and Guaranty Company, which resolutions are now in full force and effect, reading as follows:

RESOLVED, that the Chairman, the President, any Vice Chairman, any Executive Vice President, any Senior Vice President, any Vice President, any Second Vice President, the Treasurer, any Assistant Treasurer, the Corporate Secretary or any Assistant Secretary may appoint Attorneys-in-Fact and Agents to act for and on behalf of the Company and may give such appointee such authority as his or her certificate of authority may prescribe to sign with the Company's name and seal with the Company's seal bonds, recognizances, contracts of indemnity, and other writings obligatory in the nature of a bond, recognizance, or conditional undertaking, and any of said officers or the Board of Directors at any time may remove any such appointee and revoke the power given him or her; and it is

FURTHER RESOLVED, that the Chairman, the President, any Vice Chairman, any Executive Vice President, any Senior Vice President or any Vice President may delegate all or any part of the foregoing authority to one or more officers or employees of this Company, provided that each such delegation is in writing and a copy thereof is filed in the office of the Secretary; and it is

FURTHER RESOLVED, that any bond, recognizance, contract of indemnity, or writing obligatory in the nature of a bond, recognizance, or conditional undertaking shall be valid and binding upon the Company when (a) signed by the President, any Vice Chairman, any Executive Vice President, any Senior Vice President or any Vice President, any Second Vice President, the Treasurer, any Assistant Treasurer, the Corporate Secretary or any Assistant Secretary and duly attested and sealed with the Company's seal by a Secretary or Assistant Secretary; or (b) duly executed (under seal, if required) by one or more Attorneys-in-Fact and Agents pursuant to the power prescribed in his or her certificate or their certificates of authority or by one or more Company officers pursuant to a written delegation of authority; and it is

FURTHER RESOLVED, that the signature of each of the following officers: President, any Executive Vice President, any Senior Vice President, any Vice President, any Assistant Vice President, any Secretary, any Assistant Secretary, and the seal of the Company may be affixed by facsimile to any Power of Attorney or to any certificate relating thereto appointing Resident Vice Presidents, Resident Assistant Secretaries or Attorneys-in-Fact for purposes only of executing and attesting bonds and undertakings and other writings obligatory in the nature thereof, and any such Power of Attorney or certificate bearing such facsimile signature or facsimile seal shall be valid and binding upon the Company and any such power so executed and certified by such facsimile signature and facsimile seal shall be valid and binding on the Company in the future with respect to any bond or understanding to which it is attached.

I, Kevin E. Hughes, the undersigned, Assistant Secretary, of Farmington Casualty Company, Fidelity and Guaranty Insurance Company, Fidelity and Guaranty Insurance Underwriters, Inc., St. Paul Fire and Marine Insurance Company, St. Paul Guardian Insurance Company, St. Paul Mercury Insurance Company, Travelers Casualty and Surety Company, Travelers Casualty and Surety Company of America, and United States Fidelity and Guaranty Company do hereby certify that the above and foregoing is a true and correct copy of the Power of Attorney executed by said Companies, which is in full force and effect and has not been revoked.

IN TESTIMONY WHEREOF, I have hereunto set my hand and affixed the seals of said Companies this 8th day of July, 20 16.

Kevin E. Hughes, Assistant Secretary

To verify the authenticity of this Power of Attorney, call 1-800-421-3880 or contact us at www.travelersbond.com. Please refer to the Attorney-In-Fact number, the above-named individuals and the details of the bond to which the power is attached.

EXHIBIT H
TO
INVITATION FOR BIDS NO. 2016-PW-02

[Key Personnel/Subcontractor Listing]

KEY PERSONNEL/SUBCONTRACTOR LISTING

Park Restroom Facilities Remodel (2) & New Construction (2)
2016-PW-02

Key Personnel and Subcontractors listed herein shall be utilized on this Project.

Category:	Personnel/ Subcontractor Name, Contact Information:

EXHIBIT I
TO
INVITATION FOR BIDS NO. 2016-PW-02

[Performance Bond]

See following page.

PERFORMANCE BOND

Park Restroom Facilities Remodel (2) & New Construction (2)
2016-PW-02

KNOW ALL PERSONS BY THESE PRESENTS:

THAT, _____ (hereinafter called Principal), as Principal, and _____, a corporation organized and existing under the laws of the State of _____, with its principal office in the City of _____ (hereinafter called the Surety), as Surety, are held and firmly bound unto the City of Cottonwood (hereinafter called the Obligee) in the amount of _____(Dollars) ($_____), for the payment whereof, the said Principal and Surety bind themselves, and their heirs, administrators, executors, successors and assigns, jointly and severally, firmly by these presents.

WHEREAS, the Principal has entered into a certain written Contract with the Obligee, dated the _____ day of _____ 20___, for the material, service or construction described as _____ is hereby referred to and made a part hereof as fully and to the same extent as if copied at length herein.

NOW, THEREFORE, THE CONDITION OF THIS OBLIGATION IS SUCH, that if the Principal faithfully performs and fulfills all of the undertakings, covenants, terms, conditions and agreements of the Contract during the original term of the Contract and any extension of the Contract, with or without notice to the Surety, and during the life of any guaranty required under the Contract, and also performs, and fulfills all of the undertakings, covenants, terms, conditions and agreements of all duly authorized modifications of the Contract that may hereafter be made, notice of which modifications to the surety being hereby waived, the above obligation is void. Otherwise it remains in full force and effect.

PROVIDED, however, that this bond is executed pursuant to the provisions of Title 34, Chapter 2, Article 2, Arizona Revised Statutes, and all liabilities on this bond shall be determined in accordance with the provisions of Title 34, Chapter 2, Article 2, Arizona Revised Statutes, to the extent as if it were copied at length in this agreement.

The prevailing party in a suit on this bond shall recover as part of the judgment reasonable attorney fees that may be fixed by a judge of the Court.

Witness our hands this _____ day of _____ 20___.

_____
Principal Seal

By: _____

_____
Surety Seal

By: _____

_____
Agency of Record

EXHIBIT J
TO
INVITATION FOR BIDS NO. 2016-PW-02

[Payment Bond]

See following page.

PAYMENT BOND

Park Restroom Facilities Remodel (2) & New Construction (2)
2016-PW-02

KNOW ALL PERSONS BY THESE PRESENTS:

THAT, _____ (hereinafter called Principal), as Principal, and _____, a corporation organized and existing under the laws of the State of _____, with its principal office in the City of _____ (hereinafter called the Surety), as Surety, are held and firmly bound unto the City of Cottonwood (hereinafter called the Obligee) in the amount of _____(Dollars) ($_____), for the payment whereof, the said Principal and Surety bind themselves, and their heirs, administrators, executors, successors and assigns, jointly and severally, firmly by these presents.

WHEREAS, the Principal has entered into a certain written Contract with the Obligee, dated the _____ day of _____ 20___, for the material, service or construction described as _____ which Contract is hereby referred to and made a part hereof as fully and to the same extent as if copied at length herein.

NOW, THEREFORE, THE CONDITION OF THIS OBLIGATION IS SUCH, that if the Principal promptly pays all monies due to all persons supplying labor or materials to the Principal or the Principal's Subcontractors in the prosecution of the Work provided for in the Contract, this obligation is void. Otherwise it remains in full force and effect.

PROVIDED, however, that this bond is executed pursuant to the provisions of Title 34, Chapter 2, Article 2, Arizona Revised Statutes, and all liabilities on this bond shall be determined in accordance with the provisions, conditions and limitations of Title 34, Chapter 2, Article 2, Arizona Revised Statutes, to the same extent as if they were copied at length in this agreement.

The prevailing party in a suit on this bond shall recover as a part of the judgment reasonable attorney fees that may be fixed by a judge of the Court.

Witness our hands this _____ day of _____, 20___.

_____
Principal Seal

By: _____

_____
Surety Seal

By: _____

_____
Agency of Record

EXHIBIT K
TO
INVITATION FOR BIDS NO. 2016-PW-02

[Acknowledgments of Addenda received]

See following page(s).

City of Cottonwood
Park Restroom Facilities Remodel (2) & New Construction (2)
2016-PW-02 Addendum #1
July 1st, 2016

This addendum is to answer questions and to provide a replacement Price Sheet (EXHIBIT C) to include allowances.

1) How will the fixtures be attached to restroom walls?
    a. All towel dispensers and soap dispensers shall be recessed into the walls so the front surface is flush with the wall surface.
2) Do trenches under asphalt and in the parking areas need to be slurried?
    a. The trenches under asphalt or in parking areas will need to be slurried or compaction tests provided, at the contractor's expense, proving 95% maximum dry density of the material was obtained. See standard trench detail on sheet C-7.
3) Will City permit and connection fees be waived and if not how much will they be?
    a. The Contractor will not be responsible for the connection or permit fees, but will be responsible to complete all necessary documentation with the Building and Utility Departments. The invoices from these departments shall be submitted to the project manager for processing.
4) Will a waiver on the time line be granted for inclement weather?
    a. Yes, if the inclement weather is documented per the contract Section 3.21.
5) Who Will pay for the materials testing?
    a. The contractor shall be responsible for all materials testing.
6) Why was the sewer line ABS vs SDR?
    a. The Lines may be SDR instead of ABS
7) The sewer tap is to be conducted by the City, will the City pay the cost of the sewer tap fee?
    a. The Contractor shall install the sewer lines and connection as shown on the plans sheets C-5 and C-7. The Utility Inspector shall observe the contractors work. See question 3 for fees.
8) The electrical service is called to be shown on the civil plans, but is not shown in the Civil plans?
    a. The contractor is to verify the location of electrical connection with APS at Garrison Park. Each bidder shall include the following allowances. For Garrison park a $4,000 allowance. For kids park a $2,500 allowance. These allowances will be show on the

b. revised bid sheet attached and are meant to be used a place holder for the electrical trenching and coordination with APS.

9) The contractor shall replace all damaged sheething on the existing Garrison park Restroom, please clarify the quantity that is damaged?

   a. Approximately 240 square feet will need to be replaced.

10) When is the last date that questions will be accepted?

   a. June 30th, 2016

11) What is the engineers cost estimate?

   a. The estimate is not being released.

12) What amount should be used for the bid bond?

   a. See Exhibit G of the contract.

13) Please provide a calendar of events at the following parks?

   a. The contractor will be given the priority in the areas immediately surrounding the future building sites at the Kids park and at Garrison park. However, some events at the Riverfront softball hub may impact the contractor's schedule. Below is a calendar of the know activities at the park.

      i. Challenger Youth Soccer Camp – Riverfront Adult Softball Complex – July 25 -29

      ii. Adult Softball Tournament – Riverfront Adult Softball Complex – Sept. 10 and 11

      iii. Adult Softball Tournament – Riverfront Adult Softball Complex – Oct. 8 and 9

      iv. ASA Youth Softball Tournament - Riverfront Adult Softball Complex – Oc. 22 and 23

      v. Fit Kids 5 K Run – Riverfront Park – Nov. 5

14) Page C-7, Note 223: is there a detail or specification for this tap?

   a. A standard residential T-connection shall be utilized. The existing water line is a service line and not a water main. There will not need to be a meter set per note 225.

15) Is chip seal required for parking area asphalt patching per the conditions? Both Garrison and 12th Street?

   a. No a chip seal will not be required. Asphalt patches shall be per note 205 on the plans.

16) Is restriping required by the contractor? If so paint or thermoplastic?

a. Yes the contractor shall replace any striping that is removed during the project with paint.

17) Will the City of Cottonwood be obtaining ADEQ permits?

a. No ADEQ permits will be required for this project.

18) Is a two year warranty required?

a. Yes.

19) Are domestic only water fittings required?

a. Yes they will have to domestic only with no lead.

20) Will the sewer castings need to manufactured in North America?

a. No there is no "Buy American" policy on this contract.

21) Does asphalt repair in the parking areas require a T-Top?

a. Yes, see trench details on sheet C-7

22) What are the working days and hours for City inspectors?

a. Monday through Friday, 7 a.m. to 4 p.m. However after hours inspections may be possible if scheduled a minimum of five working days ahead of time.

23) Where is the location of the reclaimed water fill station to be used for construction water?

a. The fill station is located at 1480 W Mingus Ave and the contract for a card can be obtained at 111 N Main Street.

24) Has the water company reviewed and approved the Civil plans?

a. The plans have been approved by the City.

25) Are there soils reports for the site?

a. There are no soils reports available for the sites.

26) Will the City provide a fill site for export materials?

a. The city will not accept any organic material. The City will only accept fill material if it has been screened and materials larger than 4 inches diameter are separated from those smaller than 4 inches in diameter. This material may be placed at 1480 W Mingus Ave.

27) Provide details for the chain link fence and gate on note 223 sheet C-6?

a. MAG standard detail 160 shall be used without the barbed wire. The contractor shall submit shop drawing.

28) Irrigation repairs? Size and Type of pipe? Where are irrigation valves located? What is the watering schedule? Note 217, page C-5

a. Schedule 40 no larger than 2 inches. No asbuilts are available for these sites. All repairs shall be glued in place.

29) Sheet C-4 Note 218. The note to the south of the facility does not point to anything. Is it inadvertent?

a. Yes, this note is erroneous.

30) Note 200 does not appear to be used on sheet C-4 or C-5

a. This note should have been to replace the existing rip rap outside of the fence.

31) Please clarify note 209 2-6x6x6 wyes, Where are they?

a. These should have been in the location of the bends in the sewer line and these will be clean outs.

32) Note 224: Please clarify 6400 SF. Our takeoff ~ 1400 SF using 1.5' wide trench, sheet C-4

a. The 6,400 SF includes the sod replacement for the waterline.

33) STA 10+13.33 6x6x6 tee? Is line to cleanout behind Restroom 6" ABS ?

a. Yes these will be 6x6x6 tee and SDR shall be used instead of ABS.

<u>Sheet C-5 questions:</u>

34) For the waterline conflicts at STA 15+67.54 and sta 16+45.89

How deep is Waterline? What type of material and diameter of Waterline? What detail does contractor follow for addressing the conflict?

See profile for depth of waterline. The Contractor is to locate the location of the water line prior to installing the sewer line.

35) Is T top w/slurry backfill (1 sack) required?

a. 2 slack slurry will be required. See question 2 for substitute for slurry.

36) How wide is the precast MH at STA 15+64.08? (note 210 C-5 8' MAG 420-1....)

a. This is a 48" manhole

37) What is type of pipe for existing sewer? What are typical daily flows at co? Where is the upstream MH? Downstream MH? Flows? Will bypass be needed during tapping?

a. A bypass will not be needed there is only one user on the line at this time.

38) Does contractor abandon in place S8 from 15+78.69 to 16+63.66? Does City want S8 end plugs?

a. Yes the line is to be abandoned in place. Yes the old line is to be capped.

39) AC repair shows 12' wide trench. 2'+2'+2' is what's needed per detail. Do you want 12' wide AC repairs?

a. The asphalt shall be repaired per the trench detail.

40) Please clarify note 209 – 2 6x6x6x wyes - where are they?

a. Same as question #31

41) Note 213 conflicts with profile. Please clarify

a. This note should have been 212

42) Note 219 should be 8x8x8 wye

a. Yes, see question #41

43) Remove or replace "entire" fence or just where crossing?

a. The fence will only need to be replaced near the sewer crossing. The entire well enclosure will need to be re-fenced.

44) Provide detail for survey monument to be installed?

a. Same as existing monument.

45) There is a waterline conflict at station 15+69.15, does the sewer need to be incased?

a. The sewer line will need to be built per MAG standards.

<u>C6 Questions:</u>

46) What is the size and type of pipe for waterline connecting to? Does a new fitting need to be placed too?

a. This is a 6" main line and a new fitting will need to be placed.

47) Confirm that 2 – 2" ball valves and boxes are installed in "series" in 2" line.

    a. Yes, there shall be one ball valve on each end of the line.

48) What type of irrigation pipe is to be repaired? Size? Sprinklers? Where's valves? What is schedule?

    a. Schedule 40 no larger than 2 inches. No as-builts are available for these sites. All repairs shall be glued in place.

49) R/R entire cl fence or just where crossing?

    a. The fence will only need to be replaced near the sewer crossing. The entire well enclosure will need to be re-fenced.

50) 224 Please clarify where 6400 SF is takeoff qty 1400 sf using 1.5' wide trench

    a. The 6,400 SF includes the sod replacement for the waterline.

51) Please provide trench detail for 2" HDPE service line.

    a. The pipe shall be covered with sand 6" inches above, below and to both sides of the 2" line. Native material may be used above the sand. A blue #12 wire shall be attached to the line and brought to the service at both ends of the line.

52) Please identify existing waterline and new 2" HDPE.

    a. See sheet C-6 on the plans.

<u>C-7 questions</u>:

53) Confirming that COC will construct/perform sewer tap and connection? Note 224

    a. The contractor will complete the connection as shown on the plans.

54) Do you want "S" curb stamp on sewer?

    a. This will not be necessary.

55) Will trees need to be removed? Trimmed? Relocated? What does COC want contractor to do?

    a. Trees may be trimmed if necessary, but shall be protected in place.

56) What is size and type of pipe for waterline connecting to?

    a. 6"

57) Is COC providing meter? If not, what type is approved?

a. Yes the City will provide the water meter.

58) What type/size of wl to be installed?

a. 2" HDPE

59) What is type of gate valve 1" to be installed in line? STA 0+40 – what kind of bend?

a. Brass ball valves shall be used instead of gate valves.

60) Please clarify note 233

a. FF refers to the finished floor elevation of the building.

61) 1 sack slurry under ac repairs? 12' wide trench? Can be 6' wide? Why 12' at Garrison Park??

a. 2 slack slurry shall be used under the asphalt. The asphalt may be patched per the trench detail. See question 2 for substitute for slurry.

Other sheets

62) What kind of grass/sod does the City require? Did you want the sod placed on existing native or imported topsoil? Will the City be able to water/maintain all the sod 3 times a day during the first month to establish the sod? Since the contractor will have no part in the watering/care/maintenance of the sod once it is placed, will this item be excluded from the 2 year warranty?

a. The Contractor may re-use the existing grass if cut with a sod cutter and may place it on native backfill. The grass shall not be included in the warranty but the old grass shall be installed under the supervision of the maintenance supervisor

63) Course of Construction Insurance? Jeff

a. The City did not ask for $2 million. Please see the insurance requirement which is included in the bid package.

Builder's Risk Insurance. Unless expressly waived by the City Manager in a written addendum or amendment to this Contract, the Contractor shall be responsible for purchasing and maintaining insurance to protect the Project from perils of physical loss. The insurance shall provide for the full cost of replacement for the entire Project at the time of any loss. The insurance shall include as named insureds the City, the Contractor, the Contractor's Subcontractors and subcontractors and shall insure against loss from the perils of fire and all-risk coverage for physical loss or damage due to theft, vandalism, collapse, malicious mischief, transit, flood, earthquake, testing, resulting loss arising from

defective design, negligent workmanship or defective material. The Contractor shall increase the coverage limits as necessary to reflect changes in the estimated replacement cost.

64) The plans show ABS pipe & fittings. The written sewer spec on sheet C-2 (note 7) calls for SDR21 & SDR26 are allowed materials. The SDR26 pipe & fittings are what are most commonly used. There is 8" SDR26 sewer pipe shown on sheet C-5 but all the 6" is called out as ABS. Can SDR26 pipe be used in lieu of ABS for 6" pipe and for the 8" pipe?

    a. Yes, SDR may be used in place of ABS and is the preferred option.

65) On the new restrooms there isn't any floor sealer or interior paint called out. Do you want sealer on the concrete slab and paint on the CMU or sealer on the CMU?

    a. See specifications, the floor is to be epoxied and the paint is specified.

66) For the new restrooms, where is the electrical connection at the exterior? It refers you to the civil sheets but no electrical connection is shown. Is there electrical underground that needs to be done to get the power to the building?

    a. See question 8

67) It is assumed that the drinking fountain does not need power on the new restrooms, please confirm.

    a. There will not be any power to the drinking fountain.

68) At the Riverfront Re-model are we re-using the bathroom accessories in base bid and providing new for the add-alternate? At the riverfront comfort station remodel it states to remove the existing bathroom fixtures but does not tell us to re-install them in the same location. The demolition floor plan restroom fixtures to be removed appear to be of a different type than the ones shown on the construction floor plan. Please confirm that we are to reinstall the existing restroom fixtures in the base bid and provide an alternate price for furnishing and installing new fixtures with similar fixtures as in the rest of the project.

    a. There will be all new plumbing fixtures and accessories. See the specifications.

69) The water line at the Kids Park will need to be routed around the field and not across the field. The bidders shall add 120 feet to the quantity of the water line and all necessary trenching.

(The rest of this page left blank intentionally, revised price sheet on following page)

City of Cottonwood
Park Restroom Facilities Remodel (2) & New Construction (2)
2016-PW-02 Addendum #1
July 1st, 2016

REVISED PRICE SHEET
Addenda to add allowances for electrical

Park Restroom Facilities Remodel (2) & New Construction (2)
2016-PW-02

NOTE: All pricing blanks must be filled in. Empty or unfilled spaces in the Bid Price Sheet shall result in a determination that a Bid is non-responsive.

Item No.	Description of Materials and/or Services	Qty	Unit	Total Price
1	New Construction of Cottonwood Kids Park Restroom Facility	1	EA	
2	New Construction of Garrison Park Restroom Facility	1	EA	
3	Remodel of Riverfront Park Restroom Facility	1	EA	
4	Remodel of Existing Garrison Park Restroom Facility	1	EA	
	TOTAL CONSTRUCTION COST*			
	Electrical Allowance for Kids Park			$2,500.00
	Electrical Allowance for Garrison Park			$4,000.00

*** ALL BIDS ARE PRESUMED TO INCLUDE ALL APPLICABLE TAXES. CONTRACTOR IS RESPONSIBLE FOR ENSURING THAT ALL WORK CONTEMPLATED BY THE PLANS FOR THE PROJECT IS BID ON THE PRICE SHEET. THE CITY RESERVES THE RIGHT TO AWARD ANY OR ALL OF THE ITEM NUMBERS LISTED ABOVE AS THE CONTRACT.**

Park Restroom Facilities Remodel (2) & New Constru

Contractor	New Kids Park	New Garrison Park	Riverfront Remodel
Kinney Construction	$287,900.00	$191,900.00	$94,800.00
Loven Contracting	$329,579.00	$244,552.00	$88,959.00
Danson Construction	$317,000.00	$226,000.00	$68,000.00
Bayley Construction	$325,000.00	$185,000.00	$75,000.00

ıction (2)

Garrison Remodel	Total Construction Cost
$59,700.00	**$634,300.00**
$85,256.00	**$748,346.00**
$58,000.00	**$669,000.00**
$130,000.00	**$715,000.00**

City of Cottonwood, Arizona
City Council Agenda Communication

Print

Meeting Date:	September 6, 2016
Subject:	IGA for Reciprocal/Cooperative Legal Services
Department:	Attorney
From:	Steve Horton, City Attorney

REQUESTED ACTION

Approval of Resolution 2850, authorizing the City to enter into a proposed intergovernmental agreement (IGA) for Reciprocal/Cooperative Legal Services

SUGGESTED MOTION

If the Council desires to approve this item the suggested motion is:

"I move to approve Resolution 2850, authorizing the City to enter into the proposed intergovernmental agreement for Reciprocal/Cooperative Legal Services."

BACKGROUND

At a meeting of the Northern Arizona City Attorneys' Association earlier this year, Sedona City Attorney Robert Pickels suggested the idea of an IGA through which our respective municipalities, associated counties, and all of our legal departments (to the extent they are interested), might "lend a hand" to one another in cases where it makes sense to do that, and subject to available time and resources. Examples of when one city/town/county attorney (or a deputy/assistant from a county, city or town that has them) might be called upon to assist another participating agency include personnel and other administrative hearings (either before a board or commission or the governing body itself), where the agency's legal department cannot simultaneously represent the administrative department/decision and advise the deciding body; instances where there is a real, perceived or alleged conflict of interest; and other cases where the requesting agency's legal department materially participated in a decision or other matter being challenged, and a "second opinion" is warranted. In each of these cases, outside counsel can and often is retained, but under this IGA, participating agencies could in certain cases (and subject to availability) share internal resources and in-house expertise, and save the requesting agency/legal department significant expense at no cost to the providing agency/department.

JUSTIFICATION/BENEFITS/ISSUES

Approval of this IGA will serve as another example of the collegiality and close working relationships between governmental agencies in Greater Arizona (and their respective legal departments), and provide an opportunity for mutual assistance, resource sharing, and cost savings in proper cases, without any obligation to provide assistance in any case where the party whose assistance has been requested is unable or uncomfortable serving

in whatever matter, proceeding or capacity it is being asked to participate, for whatever reason.

The City's insurance carrier has been consulted about this arrangement, and has indicated that as long as the services are provided by in-house legal staff of a member municipality, that member's insurance will extend to services provided under this IGA.

COST/FUNDING SOURCE

N/A. This involves a sharing of internal resources only, and there are no additional fiscal or budgetary impacts associated with this agreement.

ATTACHMENTS:		
Name:	Description:	Type:
res2850.docx	Resolution Number 2850	Cover Memo
IGA_Reciprocal_Legal_Services.3.docx	IGA	Cover Memo

RESOLUTION NUMBER 2850

A RESOLUTION OF THE MAYOR AND CITY COUNCIL OF THE CITY OF COTTONWOOD, YAVAPAI COUNTY, ARIZONA, APPROVING AN INTERGOVERNMENTAL AGREEMENT BETWEEN CITIES AND COUNTIES OF THE STATE OF ARIZONA, FOR RECIPROCAL PROVISION OF LIMITED LEGAL SERVICES.

WHEREAS, the governing bodies are empowered to enter into Intergovernmental Agreements for the provision of joint or cooperative action pursuant to Arizona Revised Statutes ("A.R.S.") §11-951, and

WHEREAS, occasions exist wherein the designated attorneys for the cities, towns, and/or counties identify a conflict of interest in the representation of their respective cities or counties and a board or commission properly constituted to take action as delegated to them by the governing bodies of their cities or counties thereby necessitating the retention of counsel outside of the organization to provide representation to the board or commission properly convened; and

WHEREAS, the governing bodies encourage opportunities for their respective cities and counties to work cooperatively in providing high quality services in the most efficient manner possible; and

WHEREAS, the governing bodies have identified a significant benefit to their respective cities or counties that will result from the provision of reciprocal legal services on a limited basis for representation to properly convened boards or commissions of each other as resources may allow.

NOW, THEREFORE, BE IT RESOLVED BY THE MAYOR AND CITY COUNCIL OF THE CITY OF COTTONWOOD, YAVAPAI COUNTY, ARIZONA:

THAT, the Intergovernmental Agreement between cities and counties of the State of Arizona for reciprocal provision of limited legal services is hereby approved.

PASSED AND ADOPTED BY THE CITY COUNCIL AND APPROVED BY THE MAYOR OF THE CITY OF COTTONWOOD, YAVAPAI COUNTY, ARIZONA, THIS 6TH DAY OF SEPTEMBER 2016.

_____
Diane Joens, Mayor

APPROVED AS TO FORM:

_____
Steven B. Horton, Esq.
City Attorney

ATTEST:

_____
Marianne Jiménez, City Clerk

INTERGOVERNMENTAL AGREEMENT BETWEEN CITIES AND COUNTIES OF THE STATE OF ARIZONA FOR RECIPROCAL PROVISION OF LIMITED LEGAL SERVICES

This Intergovernmental Agreement ("IGA" or "Agreement"), dated as of _____, 2016, is by and between those cities and/or counties of Arizona, municipal corporations and bodies politic of the State of Arizona ("Parties") that have approved and executed this Agreement as set forth below.

RECITALS

WHEREAS, the governing bodies of the Parties are empowered by Arizona Revised Statutes (A.R.S.) 11-951 et seq. to enter into intergovernmental agreements for the provision of joint or cooperative action; and

WHEREAS, occasions exist wherein the designated attorneys for the Parties identify a conflict of interest in the representation of their respective cities or counties and a board or commission properly constituted to take action as delegated to them by the governing bodies of their cities or counties thereby necessitating the retention of counsel outside of the organization to provide representation to the board or commission properly convened; and

WHEREAS, the governing bodies of the Parties encourage opportunities for their respective cities and counties to work cooperatively in providing high quality services in the most efficient manner possible; and

WHEREAS, the Parties have identified a significant benefit to their respective cities or counties that will result from the provision of reciprocal legal services on a limited basis for representation to properly convened boards or commissions of each other as resources may allow;

NOW THEREFORE, in consideration of the terms and conditions contained herein, the Parties agree as follows:

Section 1. Purpose: The purpose of the Agreement is for each Party, upon request of the other and dependent on available resources, to provide reciprocal legal services in the form of representation to duly constituted and properly convened boards and commissions of the requesting Party. The Party making the request for services shall hereinafter be referred to as "Requestor," and the Party providing the services shall hereinafter be referred to as "Provider."

Section 2. Duration: This Agreement shall become effective on the date it is adopted, approved and fully executed by the governing bodies of each Party and shall continue in full force and effect for a period of five (5) years from the date of its execution unless otherwise terminated prior to that date by either Party pursuant to Section 7 herein.

Section 3. Obligations of the Parties:

A. Each Party to this Agreement will, depending on the availability of staff resources and subject to Section 3.D herein, provide legal services to the other Party in the form of coverage as legal advisor for board or commission meetings at which the Requestor has a responsibility to act as or to provide legal counsel, but is unable to personally act in such capacity due to a real or perceived conflict of interest.

B. Following a determination of availability and a commitment to provide the requested legal service to the Requestor, Provider shall provide the legal services in a timely and professional manner, adhering to all applicable standards for professional responsibility, by an attorney with the requisite experience level necessary to meet the Requestor's stated needs.
C. The Requestor shall provide to the Provider, in advance of any proceeding for which legal services have been requested and a resulting commitment to provide the legal services made, all relevant background information necessary for the Provider to have a sufficient understanding of the nature of the proceedings and any issues particular to the board or commission to which the legal services will be provided.
D. Any Party of which a request for legal services pursuant to this Agreement is made shall have the unqualified ability to reject any request for legal services that is deemed to not be in the best interest of the non-requesting Party.
E. Each Party to this Agreement shall be solely responsible for the nature and quality of the legal services provided by their respective staff designated hereunder and shall defend, indemnify and hold the other Party harmless in the event of any claim, charge or action alleging negligence, malfeasance or violation of any professional responsibility in the performance of the duties described herein.

Section 4. Manner of financing: Each Party to this Agreement shall bear the responsibility for its own costs incurred in the form of employee compensation; however, reimbursement for pre-approved expenses such as mileage, lodging or per diem may be remitted by the Requestor to the extent permitted in the Requestor's organizational policies.

Section 5. Authorization: This intergovernmental agreement shall become effective upon execution by the appropriate officials of each Party hereto.

Section 6. Conflict of Interest: This intergovernmental agreement is subject to the conflict of interest provisions of A.R.S. 38-511, as amended, the provisions of which are incorporated herein.

Section 7. Termination: This intergovernmental agreement shall terminate upon the expiration as identified in Section 2 herein, or by either Party giving the other at least ninety (90) days advance notice of its desire to terminate the Agreement prior to its natural expiration.

Section 8. Compliance with Law: The Parties must comply with all federal, state and local laws and ordinances applicable to its performance under this Agreement.

Section 9. Severability: If any terms, party, or provisions of this Agreement are for any reason determined to be invalid or unenforceable, the remaining terms, parts or provisions are nevertheless valid and enforceable.

Section 10. Integration: This Agreement contains the entire agreement between the Parties and no oral or written statements; promises or inducements made by either Party or its agents not contained or specifically referred to in this Agreement is valid or binding. All modifications to this Agreement must be in writing, signed and endorsed by the Parties.

Section 11. No Partnership: Nothing in this Agreement constitutes a partnership or joint venture between the Parties and neither Party is the principal or agent of the other.

Section 12. Notices: All notices or demands upon any Party to this Agreement shall be in writing and all shall be delivered in person or sent by mail addressed as follows:

City of Sedona
City Attorney
102 Roadrunner Dr.
Sedona, AZ 86336

City/County of _____
City/County Attorney
_____
_____

Section 13. Employment Eligibility: Each Party warrants and shall require its subcontractors to warrant that it is in compliance with all federal immigration laws and regulations that relate to its employees and with A.R.S. 23-214 relating to verification of employment eligibility. A breach of this warranty shall be deemed a material breach of the Agreement and is subject to penalties up to and including termination of this Agreement. The Parties retain the legal right to inspect the papers of any Party or subcontractor employee who works on the Agreement, to ensure that the other Party or its subcontractors are complying with this warranty.

IN WITNESS WHEREOF, this Agreement has been executed on the dates and year as follows:

DATE: _____, 2015

CITY OF SEDONA

_____
CITY MANAGER

DATE: _____, 2015

CITY/COUNTY OF

_____
CITY/COUNTY MANAGER

ATTEST:

_____
CITY CLERK

_____
CITY/COUNTY CLERK

Pursuant to A.R.S. 11-952, the foregoing Agreement has been submitted to the undersigned City Attorney for the City of Sedona, Arizona. The undersigned has determined that this Agreement is in proper form and is within the powers and authority granted under the laws of the State of Arizona to the City of Sedona:

_____
ROBERT L. PICKELS, JR.
CITY ATTORNEY

Pursuant to A.R.S. 11-952, the foregoing Agreement has been submitted to the undersigned City/County Attorney for the City/County of _____, Arizona. The undersigned has determined that this

Agreement is in proper form and is within the powers and authority granted under the laws of the State of Arizona to the City/County of _____:

_____

CITY/COUNTY ATTORNEY

CLAIMS EXCEPTIONS REPORT OF SEPTEMBER 6, 2016			
FUND	**VENDOR NAME**	**DESCRIPTION**	**TOTAL**
All	City of Cottonwood	Payroll 07/29/2016	$ 538,350.27
All	City of Cottonwood	Payroll 08/12/2016	$ 519,238.47
All	City of Cottonwood	Payroll 08/26/2016	$ 526,447.66
All	Arizona Public Employers Health Pool	June Insurance Premiums	$ 178,765.96
Gen	Gammage & Burnham	Contractual Services	$ 9,915.00
Utilities	Kenneth Knickerbocker	Professional Services	$ 14,476.13
All	SC Fuel	Fuel	$ 10,578.78
Gen	Zetron	Annual Service Contract	$ 15,576.08
All	APS	Utilities	$ 24,102.45
Utilities	AZ Dept. of Environmental Quality	Permits	$ 9,019.50
All	City of Cottonwood	Utilities	$ 20,870.89
Utilities	Goldstreet Designs, Inc.	Water Quality Reports FY 16	$ 5,537.96
Gen	Heinfeld, Meech & Co. PC	Audit FY 2016	$ 13,078.80
Gen	Norris Design Inc	Verde River Recreation Master Plan	$ 10,000.00
Gen	Patriot Disposal	Community Clean up	$ 8,508.00
Gen	Shaw Law Firm	Court Appt Atty Services	$ 6,202.50
Capital	Shephard Westnitzer Inc	Drainage Master Plan	$ 51,091.85
Gen	Verde Valley Senior Center	4th Quarter 2016	$ 13,750.00
Gen	APS	Utilities	$ 58,059.07
Utilities	Ferguson Waterworks	Parts & Supplies	$ 13,252.51
P & R	Fireworks Productions	Pyrotechnics (July 4)	$ 20,600.00
Legal	Gammage & Burnham	Contractual Services	$ 15,390.00
Utilities	HD Supply Waterworks Ltd	Software Maintenance & Meters	$ 7,009.18
Legal	Jordahl, Mikkel	Prosecuting Attorney Fees	$ 7,500.00
Gen	Old Town Center for The Arts	4th Quarter 2016	$ 5,000.00
Gen	SC Fuels	Fuel	$ 9,904.75
Utilities	TransAM Trucking Inc.	Biosolids Hauling & Disposal	$ 5,017.25
Utilities	US Postmaster	Postage	$ 10,500.00
All	Accurate Building Maintenance	Custodial	$ 20,907.00
All	APS	Utilities	$ 45,559.14
Gen	Az Dept of Revenue	Tax Assessment and Collection Fee	$ 24,086.95
All	AZ Municipal Risk Retention Pool	Liability Insurance	$ 125,244.50
Gen	Az State Treasurer	Court Fines	$ 11,848.83
Gen	Cottonwood Chamber	Bed Tax Estimate for June 2016	$ 13,000.00
Utilities	Felix Construction	Riverfront Reclamation Facility	$ 302,296.40
Gen	Lexipol	AZ Law Enforcement Policy Manual	$ 9,328.00
Airport	Mercfuel	Fuel for Airport	$ 20,429.03
Gen	Waste Management	Waste Removal Transfer Station	$ 10,765.12
Utilities	Felix Construction	Riverfront Reclamation Facility	$ 180,538.85
Utilities	Kathleen Flanagan Sanders	Polyblend polymer	$ 10,130.58
HURF	Hansen Enterprises Fleet Repair	Vehicle Maintenance	$ 6,572.11
Utilities	Kenneth Knickerbocker	Professional Services	$ 27,249.09
Utilities	Larry H Miller Toyota	2016 Toyota Sienna for Utilities - State Contract	$ 29,037.42
Capital	Shephard Westnitzer Inc	Drainage Master Plan	$ 18,937.50
Gen	SHI International Corp	Annual Software License	$ 37,675.55
Utilities	Tomahawk Power LLC	210 KW standby diesel Powered Generator	$ 49,497.00
Gen	Waste Management	Transfer Station Roll Offs	$ 12,135.92
All	Aps	Power Utilities	$ 13,169.49
All	Arizona Public Employers Health Pool	July 2016 Insurance Premiums	$ 181,073.51
Gen	Public Safety Personnel Retirement	Advanced Payment of Employer	$ 604,948.60
All	City of Cottonwood	Water Utilities	$ 11,671.06
Gen	City of Cottonwood	Change fund for Thunder Valley Ralley	$ 7,200.00
Utilities	Polydyne, Inc	Polymer	$ 6,696.00
All	SC Fuels	Fuel	$ 9,251.28
Gen	AGM Sales and Services	Generator rentals for TVR	$ 5,000.00
All	APS	Utilities	$ 12,383.33
All	City of Cottonwood	Utilities	$ 6,286.28
Gen	Cottonwood Chamber	Bed Tax Estimate for Remaining June 2016 and July 2016	$ 19,529.64
HURF	Creative Bus Sales	Repair Air Suspension/Ramp	$ 13,289.24
Utilities	Crestview	AIAC FY 2014-15	$ 5,882.96
Utilities	Del Webb Conventry Homes	AIAC FY 2014-15	$ 50,800.35
Utilities	Empire Southwest	Midi Excavator	$ 33,221.88
Utilities	HD Supply Waterworks Ltd	Supplies	$ 12,739.72
CDBG Capital	Douglas Stroh	CDBG - Civic Center design improvements/HVAC	$ 7,808.06
TOTAL			**$ 4,083,933.45**